G95CSU
Up to 95% AFUE, Single-Stage, Variable Speed Communicating, Ultra Low NOx Emissions 35-in. (889 mm) Tall, Condensing Gas Furnace

HEATING & COOLING PRODUCTS

Product Specifications

SYST0101CW Recommended (sold separately)

A200356

Illustrations and photographs are only representative. Some product models may vary.

⚠ WARNING

CARBON MONOXIDE POISONING AND FIRE HAZARD

Failure to follow this warning could result in personal injury, death, and/or property damage.

This furnace is not designed for use in recreation vehicles, manufactured (mobile) homes or outdoors.

Failure to follow this warning could result in personal injury, death, and/or property damage.

Use of the AHRI Certified TM Mark indicates a manufacturer's participation in the program. For verification of certification for individual products, go to www.ahridirectory.org .

ISO 9001 Quality

A200326

EASIER TO SELL

- Up to 95.0% AFUE
- ION™ Communicating Control System, approved for installations up to 5,400 ft.
- Variable-speed, constant airflow ECM blower motor for extra SEER boost with select cooling equipment and single-stage gas valve
- Supports single-stage, two-stage and variable speed cooling units
- Dehumidification feature in cooling
- Ultra Low NOx - meets the nitrogen oxides (NOx) emission limit of 14 nanograms/joulPe for the South Coast Air Quality Management District and San Joaquin Valley Air Pollution Control District in California
- Cabinet air leakage less than 2.0% at 1.0 in. W.C. and cabinet air leakage less than 1.4% at 0.5 in. W.C. when tested in accordance with ASHRAE standard 193

TOUGHER

- Stainless steel tubular heat exchanger
- Stainless steel condensing secondary heat exchanger
- Enclosed pre-mix burner with variable speed inducer
- Adjustable heating blower OFF delay
- Factory set blower ON delay
- High temperature limit control designed to prevent overheating
- Pilot free, hot surface igniter
- High quality, corrosion-resistant, prepainted steel cabinet

QUIETER

- Variable speed, constant airflow ECM blower motor
- Fully insulated steel cabinet

EASIER TO INSTALL AND SERVICE

- Direct vent (2-pipe), single-pipe venting or ventilated combustion air
- Condensate trap with 6-3/8" (7-3/8" recommended) clearance in horizontal applications
- Quarter turn knobs for easy door removal and secure attachment
- Three position - upflow and horizontal (left/right) installation
- Factory configured to use natural gas, not convertible to Liquid Propane
- Concentric vent available
- Slide out blower assembly with extra long harness

LIMITED WARRANTY*

- 5 year No Hassle Replacement™ limited warranty
- Lifetime heat exchanger limited warranty with timely registration
- 5 year parts limited warranty
  - With timely registration, an additional 5 year parts limited warranty
  - * For residential applications only. See warranty certificate for complete details and restrictions, including warranty coverage for other applications.

FURNACE SIZE	CASING DIMENSIONS (IN.)			RATED HEATING OUTPUT (BTUH)*	AFUE	ENERGY STAR	HEATING AIRFLOW		COOLING CFM @ 0.5 ESP (in. W.C.)	MOTOR HP
	H	D	W		UPFLOW/ HZ		CFM Heating	Heating ESP (in. W.C.)		
G95CSU0601716	35	29.50	17.50	58,000	95.0%	YES	.12	1034	1385	1/2
G95CSU0802120	35	29.50	21.00	78,000	95.0%	YES	.12	1406	2195	1
G95CSU1002122	35	29.50	21.00	97,000	95.0%	YES	.15	1805	2225	1

*. Capacity in accordance with DOE test procedures. Ratings are position dependent. See rating plate.
ESP - External Status Pressure

MODEL NUMBER NOMENCLATURE

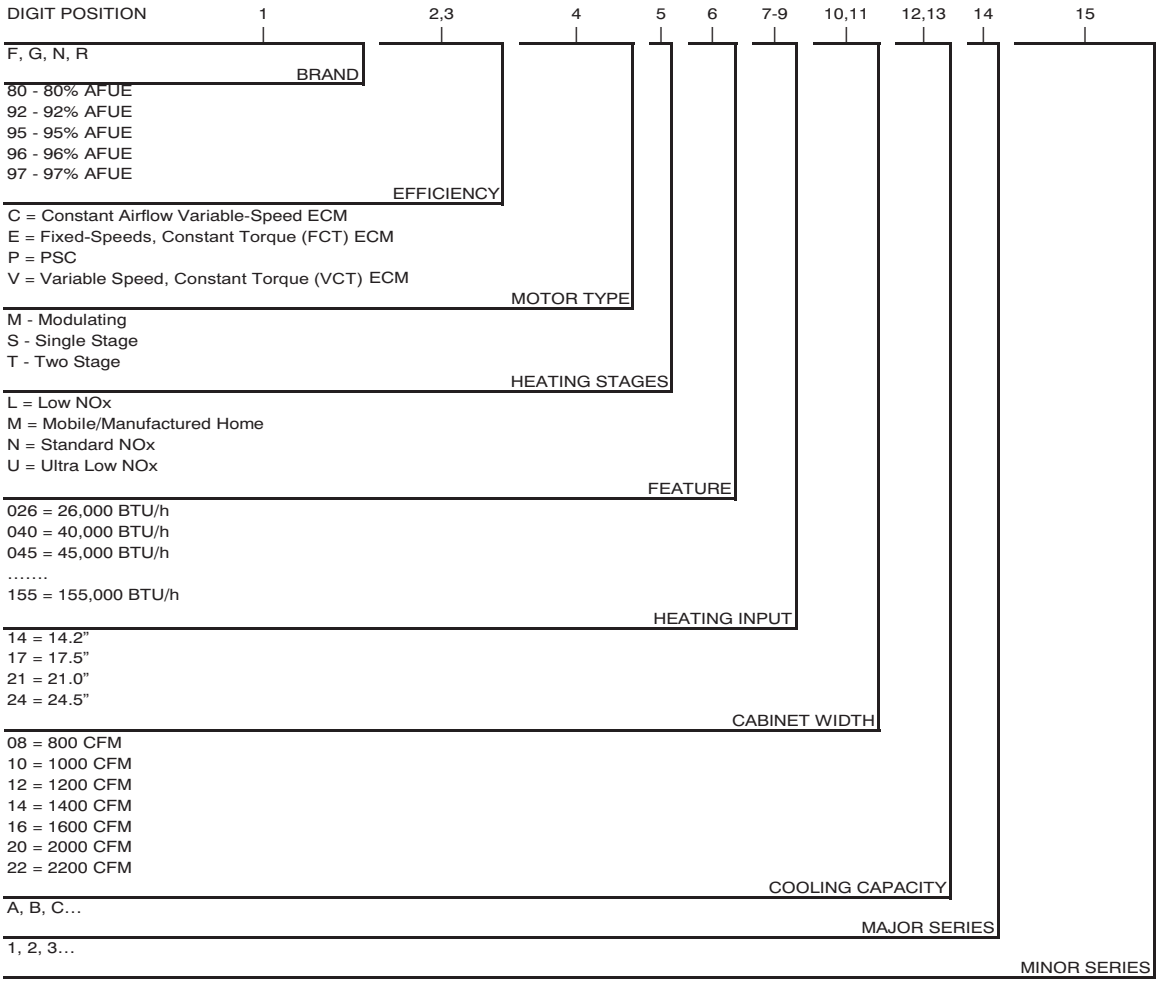

A190043

FURNACE COMPONENTS

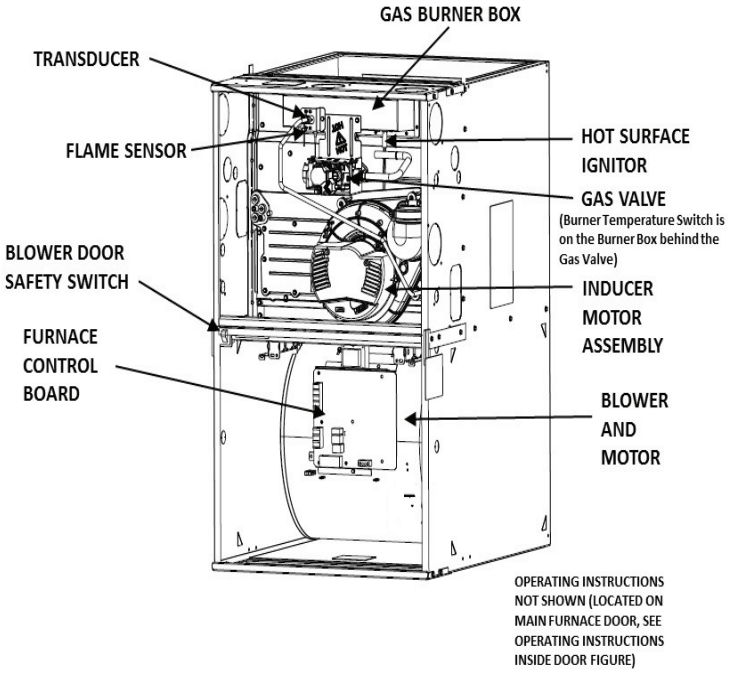

A200121

DIMENSIONAL DRAWING

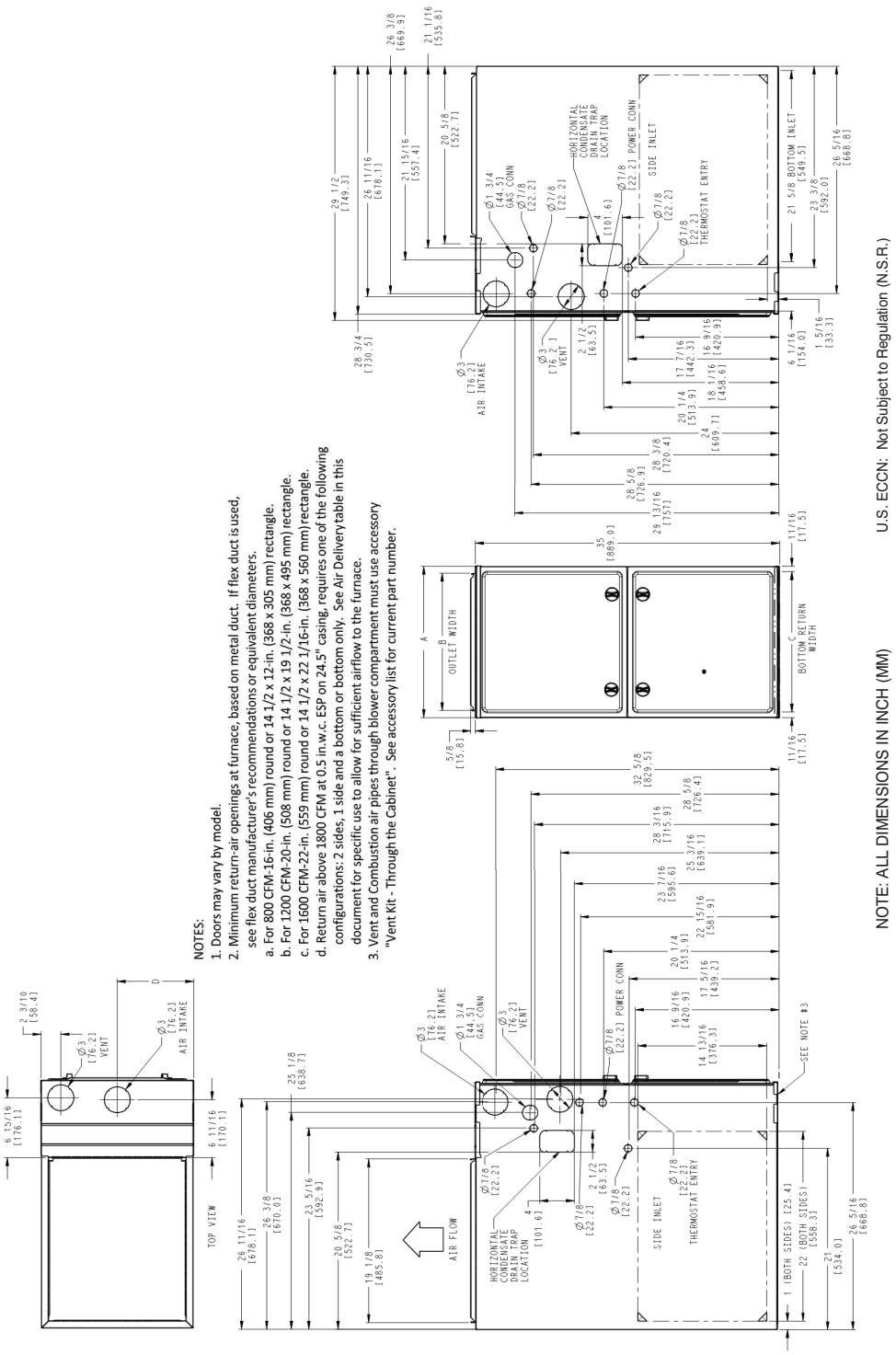

FURNACE SIZE	A	B	C	D	SHIP WT.
	CABINET WIDTH	OUTLET WIDTH	BOTTOM INLET WIDTH	AIR INTAKE	LB (KG)
0601716	17-1/2 (445)	15-7/8 (403)	16 (406)	8-3/4 (222)	149.6 (67.9)
0802120	21 (533)	19-3/8 (492)	19-1/2 (495)	10-1/2 (267)	173.1 (78.5)
1002122	21 (533)	19-3/8 (492)	19-1/2 (495)	10-1/2 (267)	180.0 (81.6)

MINIMUM CLEARANCES TO COMBUSTIBLE MATERIALS

POSITION	CLEARANCE
Rear	1 in.
Front (Combustion air openings in furnace and in structure)	1 in.
Required for service*	24 in.†
All Sides of Supply Plenum*	1 in.
Sides	1 in.*
Vent	0
Top of Furnace	1 in.

*. Additional clearance is required for condensate trap installation.
†. Consult your local building codes.

SPECIFICATIONS

Heating Capacity and Efficiency		**0601716**	**0802120**	**1002122**
Input	Heat (BTUH)	60,000	80,000	100,000
Output	Heat (BTUH)	58,000	78,000	97,000
Certified Temperature Rise Range ºF (ºC)	Heating	35 - 65 (19 - 36)	35 - 65 (19 - 36)	35 - 65 (19 - 36)
Airflow Capacity and Blower Data				
Rated External Static Pressure (in. w.c.)	Heating	0.12	0.12	0.15
	Cooling	0.50	0.50	0.50
Airflow Delivery @ Rated ESP (CFM)	Heating	1034	1406	1805
	Cooling	1385	2195	2225
Cooling Capacity (tons) @ 400, 350 CFM/ton	400 CFM/ton	3.5	5	5
	350 CFM/ton	4	5.5	5.5
Direct-Drive Motor Type		Electronically Commutated Motor (ECM)		
Direct-Drive Motor HP		1/2	1	1
Motor Full Load Amps Default		7.7	10	10
RPM Range		400 - 1200	400 - 1200	400 - 1200
Blower Wheel Dia x Width	in.	11 x 8	11 x 8	11 x 10
Air Filtration System		Field Supplied Filter		
Filter Used for Certified Watt Data		325531-40*		
Electrical Data				
Input Voltage	Volts-Hertz-Phase	115 - 60 - 1		
Operating Voltage Range	Min-Max	104 - 127		
Maximum Input Amps Default	Amps	11.4	14.3	14.3
Unit Ampacity Default	Amps	12.6	15.4	15.4
Minimum Wire Size Default	AWG	14	12	12
Maximum Wire Length @ Minimum Wire Size Default	Feet	29	37	37
	(M)	(8.8)	(11.3)	(11.3)
Maximum Fuse/Ckt Bkr (Time-Delay Type Recommended) Default	Amps	15	20	20
Transformer Capacity (24vac output)		40 VA		
External Control Power Available	Heating	23.2 VA		
	Cooling	32.8 VA		
Controls				
Gas Connection Size		1/2” NPT		
Gas Valve (Redundant)	Manufacturer	White Rodgers		
Minimum Inlet Gas pressure (in. wc)		4.5		
Maximum Inlet Gas pressure (in. wc)		13.6		
Manufactured (Mobile) Home Kit		Not approved for Manufacture (Mobile) Home use		
Ignition Device		Silicon Nitride		
Heating Blower Control (Heating Off-Delay)		Adjustable: 90, 120, 150, 180 seconds		
Cooling Blower Control (Time Delay Relay)		90 seconds		
Communication System		ION™ Communicating SYS0101CW		
Thermostat Connections		W/W1 Y1 and Y/Y2, DHUM, G, COM24V, R		
Accessory Connections		EAC (115vac), DHUM (24vac), 1-stg AC (via Y!)		

Manufacturer reserves the right to change, at any time, specifications and designs without notice and without obligations.

ACCESSORIES

DESCRIPTION	PART NUMBER	0601716	0802120	1002122
Trap Offset Adapter Kit - Upflow with Right Side Return (10 pack)	AGACDKTUA10A	X	X	X
Vent Terminal - Concentric - 2” (51 mm)	NAHA002CV	See Venting Tables		
Vent Terminal - Concentric - 3” (76 mm)	NAHA001CV			
Vent Terminal Bracket - 2” (51 mm)	NAHA00301VT			
Vent Terminal Bracket - 3” (76 mm)	NAHA00401VT			
Vent Kit - Rubber Coupling	NAHA00101CK			
Freeze Protect Kit - Condensate Drain Line Tape	NAHA00101HH	X	X	X
CPVC to PVC Drain Adapters - 1/2” CPVC to 3/4” PVC (10 pack)	NAHA0110DA	X	X	X
Horizontal Trap Grommet - Direct Vent	NAHA00101HV	X	X	X
Condensate Neutralizer Kit	NAHA001NK	X	X	X
Return Air Base (Upflow Applications) 17.5-in. wide	NAHA01701RA	X	-	-
Return Air Base (Upflow Applications) 21.05-in. wide	NAHA02101RA	-	X	X
Gas Valve Tower Port Adapter Kit*	1188594	X	X	X
External Bottom Return Filter Rack*	FHG1625-2	X	-	-
	FHG2025-2	-	X	X
Washable Unframed Filter 3/4-in. (19 mm)*	325531-402	X	-	-
	325531-403	-	X	X
ION™ Control System	SYST0101CW	X	X	X
Coil Adapter Kits (see Installation Instructions for coil requirements)				
Coil Adapter Kits - No Offset	NAHB00101CA	X	X	X
Coil Adapter Kits - Single Offset	NAHB00201CA	X	X	X
Coil Adapter Kits - Double Offset	NAHB00301CA	X	X	X

*. Purchased through FAST Parts
X Used with the model furnace

AIR DELIVERY

Air Delivery - CFM (With Filter)

COOLING[4] AND HEATING AIR DELIVERY - CFM (Bottom Return with Filter)													
(SW1-5 and SW4-3 set to OFF, except as indicated. See Notes 1 and 2.)													
Unit Size: 0601716	Clg/CF Switch settings			External Static Pressure (ESP)									
Clg Switches:	SW2-3	SW2-2	SW2-1	0.1	0.2	0.3	0.4	0.5	0.6	0.7	0.8	0.9	1.0
Clg Default:	OFF	OFF	OFF	1300	1295	1300	1300	1295	1290	1280	1265	1240	1200
CF Switches	SW3-3	SW3-2	SW3-1										
Low-Clg Default:	OFF	OFF	OFF	1300	1295	1300	1300	1295	1290	1280	1265	1240	1200
Cooling (SW2) Low-Cooling (SW3)	OFF	OFF	ON	545	545	540	Note 4						
	OFF	ON	OFF	710	720	720	725	720	Note 4				
	OFF	ON	ON	895	910	920	920	920	915	895	885	Note 4	
	ON	OFF	OFF	1090	1105	1115	1120	1120	1120	1110	1100	1095	1080
	ON	OFF	ON	1300	1295	1300	1300	1295	1290	1280	1265	1240	1200
	ON	ON	OFF	1470	1465	1455	1420	1385	1350	1315	1275	1240	1200
	ON	ON	ON	1470	1465	1455	1420	1385	1350	1315	1275	1240	1200
	Maximum Clg Airflow[2]			1515	1480	1455	1420	1385	1350	1315	1275	1240	1200
CF Switches	SW3-3	SW3-2	SW3-1										
Cont. Fan Default:	OFF	OFF	OFF	545	545	540	Note 4						
Continuous Fan (SW3)	OFF	OFF	ON	545	545	540	Note 4						
	OFF	ON	OFF	710	720	720	725	720	Note 4				
	OFF	ON	ON	895	910	920	920	920	915	895	885	Note 4	
	ON	OFF	OFF	895	910	920	920	920	915	895	885	Note 4	
	ON	OFF	ON	895	910	920	920	920	915	895	885	Note 4	
	ON	ON	OFF	895	910	920	920	920	915	895	885	Note 4	
	ON	ON	ON	895	910	920	920	920	915	895	885	Note 4	
Heating (SW1)	Heat Airflow[3]			1035	1030	1035	1035	1040	1035	1035	1025	1015	1005

Air Delivery - CFM (With Filter) (Continued)

COOLING[4] AND HEATING AIR DELIVERY - CFM (Bottom Return with Filter)													
(SW1-5 and SW4-3 set to OFF, except as indicated. See Notes 1 and 2.)													
Unit Size: 0802120[5]	Clg/CF Switch settings			External Static Pressure (ESP)									
Clg Switches:	SW2-3	SW2-2	SW2-1	0.1	0.2	0.3	0.4	0.5	0.6	0.7	0.8	0.9	1.0
Clg Default:	OFF	OFF	OFF	1825	1830	1830	1825	1825	1825	1815	1810	1805	1785
CF Switches	SW3-3	SW3-2	SW3-1										
Cooling (SW2) Low-Cooling (SW3)	OFF	OFF	ON	695	700	Note 4							
	OFF	ON	OFF	870	885	880	880	Note 4					
	OFF	ON	ON	1045	1060	1070	1070	1070	1070	Note 4			
	ON	OFF	OFF	1310	1315	1315	1315	1310	1300	1290	1280	Note 4	
	ON	OFF	ON	1470	1475	1480	1480	1480	1475	1465	1460	1450	1440
	ON	ON	OFF	1825	1830	1830	1825	1825	1825	1815	1810	1805	1785
	ON	ON	ON	2170	2180	2180	2175	2170	2150	2080	1995	1915	1825
	Maximum Clg Airflow[2]			2230	2225	2235	2230	2195	2165	2110	2020	1935	1845
CF Switches	SW3-3	SW3-2	SW3-1										
Cont. Fan Default:	OFF	OFF	OFF	695	700	Note 4							
Continuous Fan (SW3)	OFF	OFF	ON	695	700	Note 4							
	OFF	ON	OFF	870	885	880	880	Note 4					
	OFF	ON	ON	870	885	880	880	Note 4					
	ON	OFF	OFF	870	885	880	880	Note 4					
	ON	OFF	ON	870	885	880	880	Note 4					
	ON	ON	OFF	870	885	880	880	Note 4					
	ON	ON	ON	870	885	880	880	Note 4					
Heating (SW1)	Heat Airflow[3]			1425	1430	1435	1435	1435	1425	1420	1410	1400	1390
Unit Size: 1002122[6]	Clg/CF Switch settings			External Static Pressure (ESP)									
Clg Switches:	SW2-3	SW2-2	SW2-1	0.1	0.2	0.3	0.4	0.5	0.6	0.7	0.8	0.9	1.0
Clg Default:	OFF	OFF	OFF	1765	1775	1790	1805	1810	1820	1820	1820	1820	1820
CF Switches	SW3-3	SW3-2	SW3-1										
Cooling (SW2) Low-Cooling (SW3)	OFF	OFF	ON	630	Note 4								
	OFF	ON	OFF	805	830	Note 4							
	OFF	ON	ON	1065	1075	1080	1085	Note 4					
	ON	OFF	OFF	1240	1250	1265	1270	1270	Note 4				
	ON	OFF	ON	1410	1415	1435	1445	1450	1455	1460	Note 4		
	ON	ON	OFF	1765	1775	1790	1805	1810	1820	1820	1820	1820	1820
	ON	ON	ON	2115	2115	2125	2140	2145	2150	2145	2140	2080	1985
	Maximum Clg Airflow[2]			2165	2185	2200	2215	2225	2240	2250	2210	2120	2030
CF Switches	SW3-3	SW3-2	SW3-1										
Cont. Fan Default:	OFF	OFF	OFF	630	Note 4								
Continuous Fan (SW3)	OFF	OFF	ON	630	Note 4								
	OFF	ON	OFF	805	830	Note 4							
	OFF	ON	ON	1020	1040	1050	Note 4						
	ON	OFF	OFF	1020	1040	1050	Note 4						
	ON	OFF	ON	1020	1040	1050	Note 4						
	ON	ON	OFF	1020	1040	1050	Note 4						
	ON	ON	ON	1020	1040	1050	Note 4						
Heating (SW1)	Heat Airflow[3]			1790	1800	1815	1830	1835	1845	1850	1850	1855	1855

NOTES for Cooling and Heating Air Delivery - CFM (Bottom Return with Filter)

1. Nominal 350 CFM/ton cooling airflow is delivered with SW1-5 and SW4-3 set to OFF.
   Set both SW1-5 ON for nominal 400 CFM/ton (+15% airflow).
   Set SW4-3 to ON for nominal 325 CFM/ton (-7%).
   Set SW1-5 to OFF and SW4-3 to ON for nominal 370 CFM/ton (+7% airflow)
   The above adjustments in airflow are subject to motor horsepower range/capacity
   This applies to Cooling and Low-Cooling airflow, but does not affect continuous fan airflow.
2. Maximum cooling airflow is achieved when switches SW2-3, SW2-2, SW2-1 and SW1-5 are set to ON, and SW4-3 is set to OFF.
3. All heating CFM's are when comfort/efficiency adjustment switch SW1-4 is set to OFF.
4. Ductwork must be sized for high-heating CFM within the operational range of ESP. Operation within the blank areas of the chart is not recommended because high-heat operation will be above 1.0 ESP.
5. All airflows on noted casing size furnaces are 5% less on side-return only installations.
6. Side returns for noted models require two sides, or a side and bottom to allow sufficient airflow at the return of the furnace.
7. Airflows over 1800 CFM require bottom return, two-side return, or bottom and side return or excessive watt draw may result. A minimum filter size of 20x25" (508 x 635 mm) is required.

INSTALLATION CONSIDERATIONS

Refer to Installation Instructions for complete installation requirements.

Evaporator Coil Spacer or Shield Requirements

Type of Coil	Install Flush to Furnace	Install with 8-in. Spacer	Install with Metal Shield
Furnace Manufacturer's N Coil	Allowed	Not Required	Not Required
Furnace Manufacturer's A Coil	Not Allowed	Allowed (Except 100k BTU size in Horizontal Right - MUST use shield)	Allowed (See Note 2)
3rd Party Coil - Factory Shielded (See Note 1)	Allowed	Not Required	Not Required
3rd Party Coil - Unshielded	Not Allowed	Allowed (Except 100k BTU size in Horizontal Right - MUST use shield)	Allowed (See Note 3)

NOTE:

1. 3rd Party Coils that are factory-supplied with a metallic shield over the plastic composite drain pan must completely shield all plastic composite materials from direct exposure to any part of the heat exchanger. Consult with 3rd Party Manufacturer to ensure coil is properly shielded. Coils that are only partially shielded should be treated as un-shielded and require a spacer.
2. Field-fabricated metallic shield must completely shield all plastic composite materials from direct exposure to any part of the heat exchanger. Coils that are only partially shielded should be treated as un-shielded and require a spacer.
3. For 3rd party unshielded coils, consult manufacturer for design of a field-fabricated shield that completely shields all plastic composite materials from direct exposure to any part of the heat exchanger.

6-3/8" CONDENSATE TRAP (7-3/8" RECOMMENDED) CLEARANCES

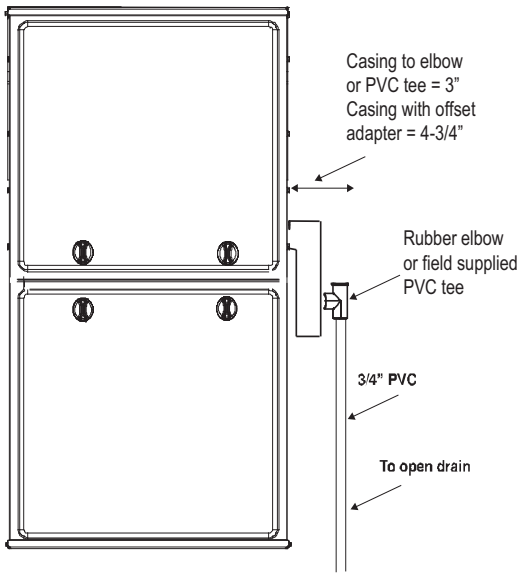

A200084

Trap Clearance in Upflow Application

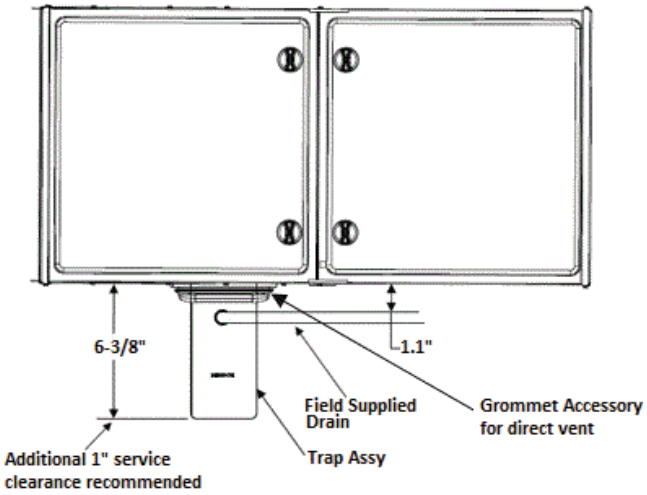

A200066

Trap Clearance in Horizontal Application
(Note: Drain line can be run horizontally or vertically)

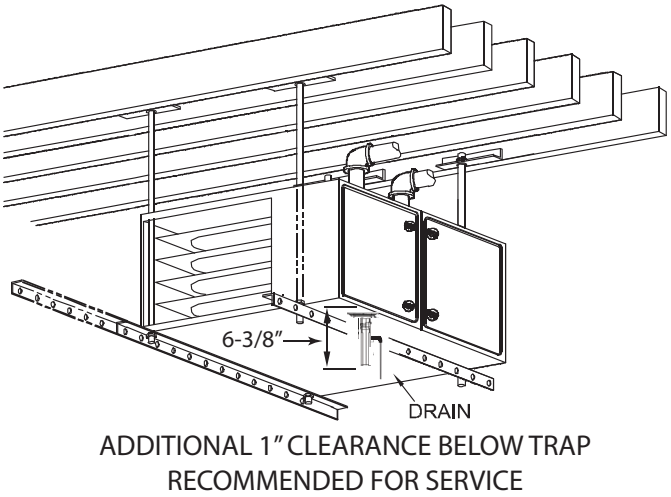

A200083

Trap Clearance in Horizontal Application

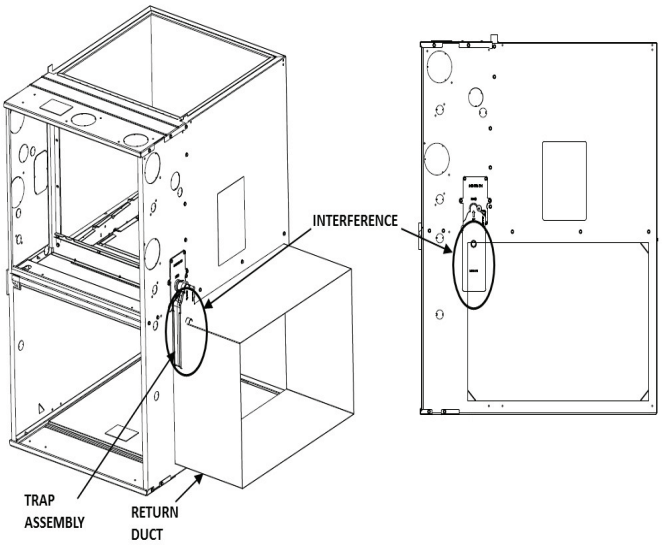

A200119

Upflow Right Side Return Configuration - Trap Interference

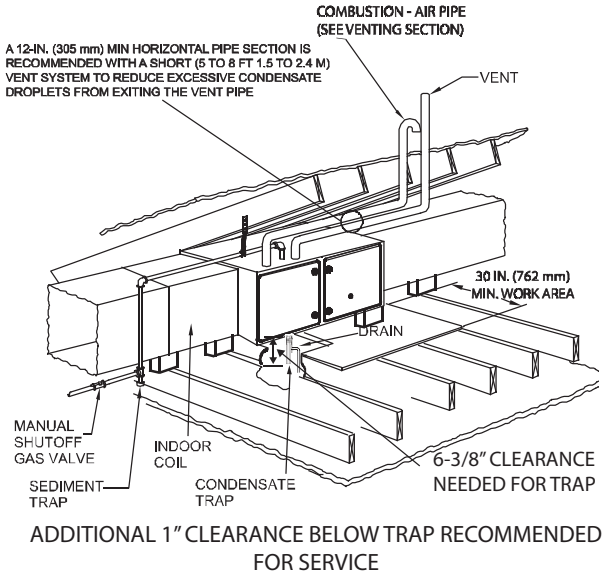

A200088

Working Platform for Attic Installation

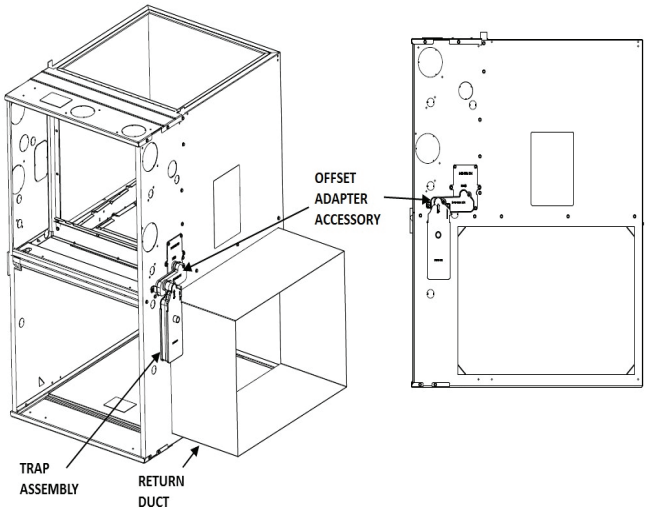

A200120

Upflow Right Side Return Configuration - Required Upflow Offset Installation

© 2020 Carrier. All rights reserved.

Manufacturer reserves the right to change, at any time, specifications and designs without notice and without obligations.