HEATING & COOLING PRODUCTS

G8MVL

QuietComfort™ VS 80

Product Specifications

80% Variable Speed, Two–Stage Heating Furnace

EASIER TO SELL

- 80% AFUE
- Cabinet air leakage less than 2.0% at 1.0 in. W.C. and cabinet air leakage less than 1.4% at 0.5 in. W.C. when tested in accordance with ASHRAE standard 193
- Series 'B' approved for Twinning applications (0902116, 1002122, and 1352422) with accessory (order separately)
- Supports two–stage cooling units
- Observer® Communicating Control System
- Flame roll–out sensors standard
- Category I venting
- Blocked vent switch
- Dehumidification feature in cooling
- 24 VAC humidifier terminal
- Electronic air cleaner terminal
- Low NOx units are designed for California installations and meet 40 ng/J NOx emissions. Can be installed in air quality management districts with a 40 ng/J NOx emissions requirement.

TOUGHER

- Variable speed ECM blower motor
- Adjustable heating blower OFF delay
- Factory set blower ON delay
- RPJ aluminized steel heat exchanger
- High temperature limit control prevents overheating
- Direct ignition with Silicon Nitride ignitor
- One piece prepainted steel cabinet

QUIETER

- Two–stage heating operation
- Two–stage induced draft blower
- In–shot burners
- Insulated blower compartment

EASIER TO INSTALL AND SERVICE

- 33–1/3" (847mm) high, for ease of installation
- Innovative knobs for easy door removal and secure attachment
- Factory shipped for natural gas, with propane gas conversion kits available
- Four position – upflow/downflow/horizontal (left/right) installation
- Three position vent elbow capability
- Through the casing flue pipe for counterflow applications
- Common venting with other Category I appliances
- Masonry chimney adapter available
- Self diagnostics
- Slide out blower assembly

LIMITED WARRANTY *

- 10 year No Hassle Replacement™ limited warranty
- 20 year heat exchanger limited warranty
- 5 year parts limited warranty
  - With timely registration, an additional 5 year parts limited warranty

* For residential applications only, See warranty certificate for complete details and restrictions, including warranty coverage of other applications.

TSTAT0201CW Recommended (sold separately)

Illustrations and photographs are only representative. Some product models may vary.

⚠ WARNING

This furnace is not designed for use in mobile homes, trailers, or recreational vehicles. Such use could result in property damage and/or death.

AHRI CERTIFIED™ www.ahridirectory.org

Use of the AHRI Certified TM Mark indicates a manufacturer's participation in the program. For verification of certification for individual products, go to www.ahridirectory.org .

Certified System ISO 9001 QMI-SAI Global

DESIGN CERTIFIED

Model Number	Input (MBTUH)	Efficiency AFUE	Cooling Capacity CFM range @ .5 in. w.c. (125 Pa)	Dimensions H x W x D Inches (Millimeters)	Shipping Wt. Lbs (Kg)
G8MVL0451412	44,000	80%	410 – 1175	33–1/3 x 14–3/16 x 29 (847 x 360 x 737)	107 (49)
G8MVL0701716	66,000	80%	805 – 1685	33–1/3 x 17–1/2 x 29 (847 x 445 x 737)	126 (57)
G8MVL0902116	88,000	80%	725 – 1770	33–1/3 x 21 x 29 (847 x 533 x 737)	146 (66)
G8MVL1102122	110,000	80%	700 – 2230	33–1/3 x 21 x 29 (847 x 533 x 737)	152 (69)
G8MVL1352422	132,000	80%	920 – 2290	33–1/3 x 24–1/2 x 29 (847 x 622 x 737)	163 (74)

MODEL NUMBER IDENTIFICATION GUIDE

DIGIT POSITION	1	2	3	4	5	6,7,8	9,10	11,12	13	14
	G	8	M	V	L	045	14	12	B	2

- G = Mainline; N = Entry — **EFFICIENCY**
- 8 = 80% AFUE — **POSITION**
- M = Multiposition — **TYPE**
- V = Variable Speed Blower Motor – ECM; X = ECM Blower Motor; S = Single–stage; T = Two–stage — **FEATURE**
- N = Standard; L = Low NOx — **HEAT INPUT**
- 045 = 44,000 BTU/hr; 070 = 66,000 BTU/hr; 090 = 88,000 BTU/hr; 110 = 110,000 BTU/hr; 135 = 132,000 BTU/hr — **CABINET WIDTH**
- 14 = 14–3/16”; 17 = 17–1/2”; 21 = 21”; 24 = 24–1/2” — **NOMINAL MAXIMUM COOLING AIRFLOW @ .5 IN. W.C.**
- 08 = 800 CFM; 12 = 1200 CFM; 14 = 1400 CFM; 16 = 1600 CFM; 20 = 2000 CFM; 22 = 2200 CFM
- SALES (MAJOR) REVISION DIGIT
- ENGINEERING (MINOR) REVISION DIGIT

ECM–Electronically Commutated Motor

ACCESSORIES PART NUMBER IDENTIFICATION GUIDE

DIGIT POSITION	1	2	3	4	5, 6, 7	8, 9	10, 11
	N	A	H	A	001	01	DH

- N = Non–Branded — **BRANDING**
- A = Accessory — **PRODUCT GROUP**
- H = Heating — **KIT USAGE**
- A = Original; B = 2nd Generation — **MAJOR SERIES**
- Product Identifier Number
- Package Quantity
- Type of Kit (Example: DH = Draft Hood – Chimney Adapter)

For California Residents:
For installation in SCAQMD only: This furnace does not meet the SCAQMD Rule 1111 14 ng/J NOx emission limit, and thus is subject to a mitigation fee of up to $450. This furnace is not eligible for the Clean Air Furnace Rebate Program: www.CleanAirFurnaceRebate.com

PHYSICAL DATA							
NATURAL GAS			**0451412**	**0701716**	**0902116**	**1102122**	**1352422**
OUTPUT CAPACITY BTUH* (Nonweatherized ICS) †	**Upflow**	High	35,000	53,000	71,000	89,000	107,000
		Low	23,000	35,000	47,000	59,000	70,000
	Downflow/ Horizontal	High	34,000	51,000	68,000	85,000	102,000
		Low	23,000	35,000	47,000	59,000	70,000
INPUT BTUH*	**Upflow**	High	44,000	66,000	88,000	110,000	132,000
		Low	29,000	43,500	58,000	72,500	87,000
	Downflow/ Horizontal	High	42,000	63,000	84,000	105,000	126,000
		Low	29,000	43,500	58,000	72,500	87,000
TRANSFORMER (24 volt)			40 VA				
CERTIFIED TEMP RISE RANGE – °F (°C)		High	30–60 (17–33)	25–55 (14–31)	30–60 (17–33)	30–60 (17–33)	40–70 (22–39)
		Low	20–50 (11–28)	15–45 (8–25)	25–55 (14–31)	20–50 (11–28)	25–55 (14–30)
CERTIFIED EXT STATIC PRESSURE (in. w.c.)	**Heating/Cooling**		0.10/0.50	0.12/0.50	0.15/0.50	0.20/0.50	0.20/.050
AIRFLOW CFM‡	**Heating–High/Low**		820/725	1570/1045	1265/1030	1555/1295	1865/1640
	Cooling		1175	1685	1770	2230	2290
AFUE%*	**Nonweatherized ICS**		80.0	80.0	80.0	80.0	80.0
LIMIT CONTROL			SPST				
HEATING BLOWER CONTROL			Solid-State Time Operation				
BURNERS (Monoport)			2	3	4	5	6
GAS CONNECTION SIZE			1/2 inch NPT				
GAS VALVE (Redundant) Manufacturer			White-Rodgers™				
Minimum Inlet Pressure (in. w.c.)			4.5 (Natural Gas)				
Maximum Inlet Pressure (in. w.c.)			13.6 (Natural Gas)				
IGNITION DEVICE			Hot Surface				
FACTORY–INSTALLED ORIFICE			Size 43				

* Gas input ratings are certified for elevations to 2000 ft. (610 M). In USA, for elevations above 2000 ft. (610 M), reduce ratings 4 percent for each 1000 ft. (305 M) above sea level. Refer to National Fuel Gas Code NFPA 54/ANSI Z223.1−2012 Table F.4 or furnace Installation Instructions.

† Capacity in accordance with U.S. Government DOE test procedures.

‡ Airflow shown is for bottom only return−air supply in comfort mode (as shipped). For air delivery above 1800 CFM, see Air Delivery Table for other options. A filter is required for each return-air supply.

ICS — Isolated Combustion System

ELECTRICAL DATA								
G8MVL	**VOLTS HERTZ PHASE**	**OPERATING VOLTAGE RANGE**		**MAXIMUM UNIT AMPS**	**UNIT AMPACITY #**	**MAXIMUM WIRE LENGTH FT (M)‡**	**MAXIMUM FUSE OR CKT BKR AMPS† ****	**MIN. WIRE SIZE**
		Maximum*	**Minimum***					
0451412	115-60-1	127	104	8.0	10.8	34 (10.4)	15	14
0701716	115-60-1	127	104	11.3	15.0	24 (7.3)	15	14
0902116	115-60-1	127	104	10.2	13.4	27 (8.2)	15	14
1102122	115-60-1	127	104	13.0	16.8	34 (10.4)	20	12
1352422	115-60-1	127	104	13.0	16.8	34 (10.4)	20	12

* Permissible limits of the voltage range at which unit operates satisfactorily.

† Time−delay type is recommended.

‡ Length shown is as measured one way along wire path between unit and service panel for maximum 2 percent voltage drop.

** Time−delay type is recommended

UNIT DIMENSIONS

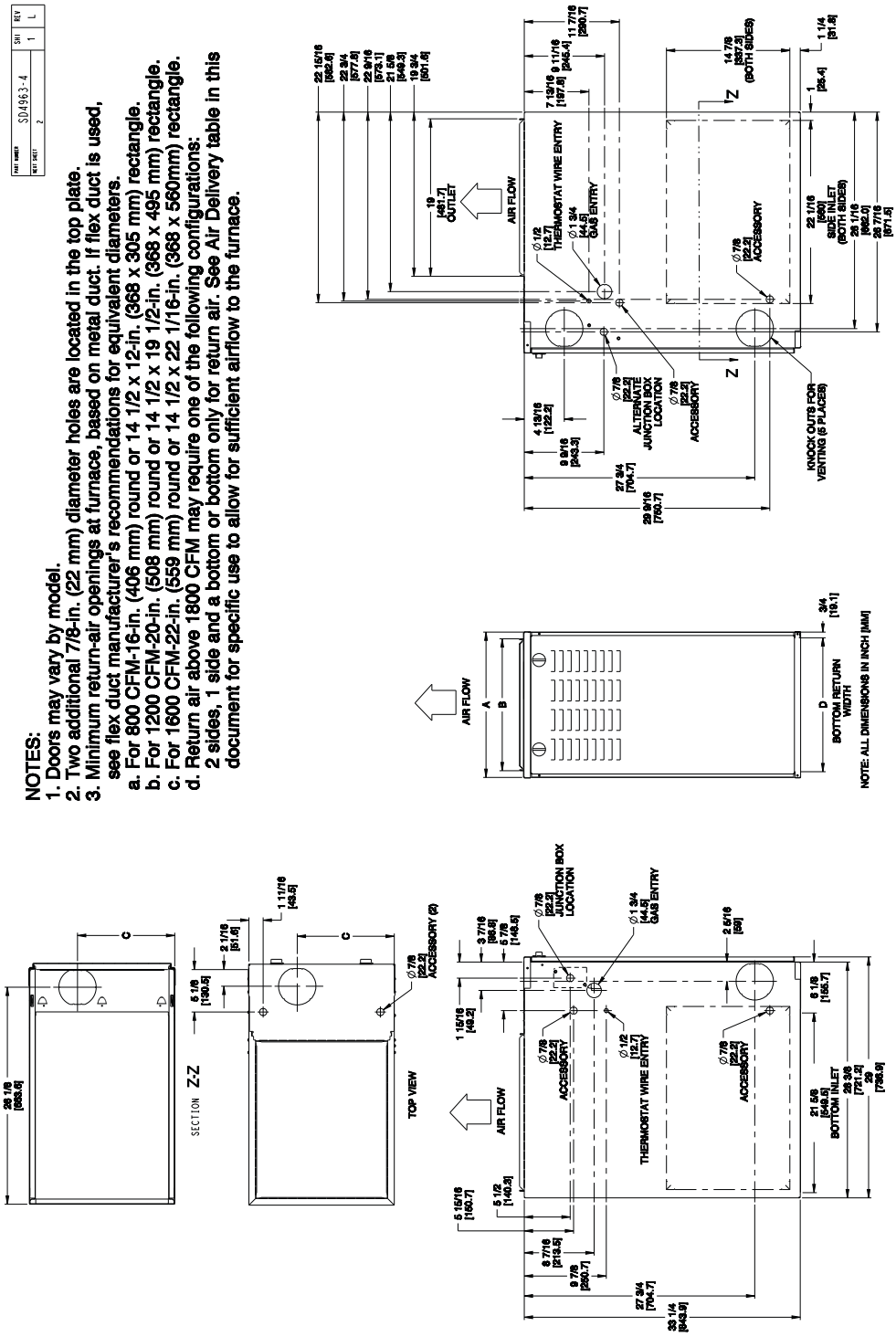

G8MVL	A CABINET WIDTH in (mm)	B OUTLET WIDTH in (mm)	C TOP AND BOTTOM FLUE COLLAR in (mm)	D BOTTOM INLET WIDTH in (mm)	FLUE COLLAR* in (mm)	SHIPPING WT. LB (KG)
0451412	14–3/16 (360)	12–9/16 (319)	9–5/16 (237)	12–11/16 (322)	4 (102)	107 (49)
0701716	17–1/2 (445)	15–7/8 (403)	11–9/16 (294)	16–1/8 (410)	4 (102)	126 (57)
0902116	21 (533)	19–3/8 (492)	13–5/16 (338)	19–1/2 (495)	4 (102)	146 (66)
1102122	21 (533)	19–3/8 (492)	13–5/16 (338)	19–1/2 (495)	4 (102)	152 (69)
1352422	24–1/2 (622)	22–7/8 (581)	15–1/16 (383)	23 (584)	4 (102)	163 (74)

* 5 inch or 6 inch (127 or 152 mm) vent connector may be required in some cases.

DOWNFLOW VENT CONFIGURATIONS

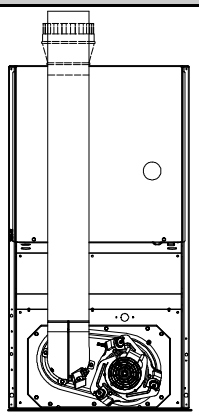

SEE NOTES: 1,2,4,5,7,8,9 A02061

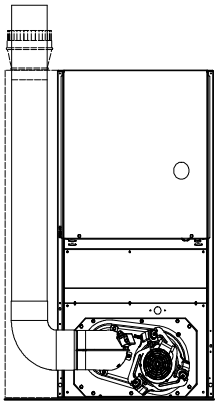

SEE NOTES: 1,2,4,5,6,7,8,9 A02062

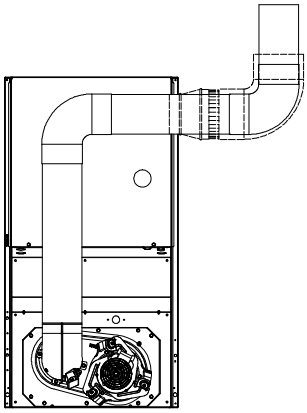

SEE NOTES: 1,2,3,4,5,7,8,9 A02063

DOWNFLOW CONTINUTED

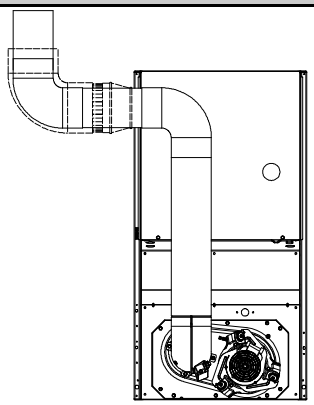

SEE NOTES:1,2,3,4,5,7,8,9 A02060

UPFLOW VENT CONFIGURATIONS

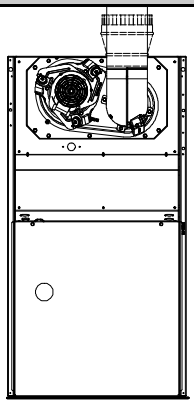

SEE NOTES: 1,2,4,7,8,9 A02058

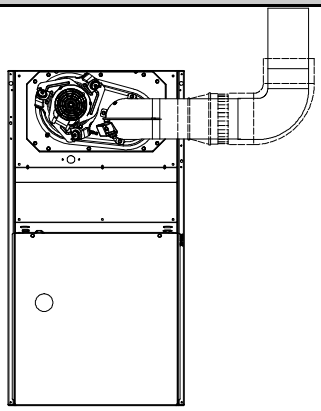

SEE NOTES: 1,2,3,4,7,8,9 A02059

HORIZONTAL RIGHT VENT CONFIGURATIONS

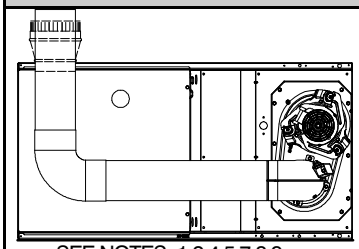

SEE NOTES: 1,2,4,5,7,8,9 A02070

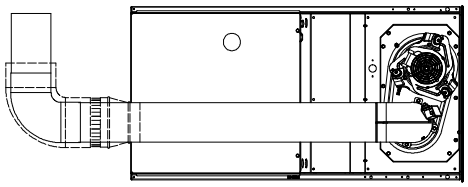

SEE NOTES: 1,2,4,5,7,8,9 A02068

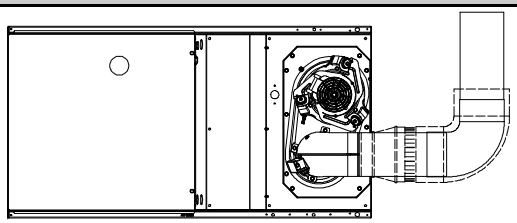

SEE NOTES: 1,2,4,7,8,9 A02069

HORIZONTAL LEFT VENT CONFIGURATIONS

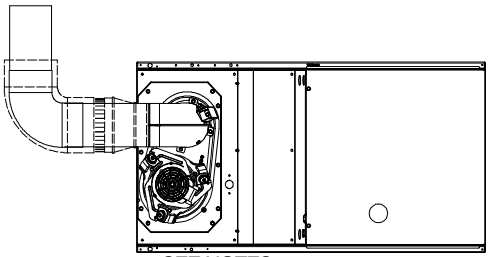

SEE NOTES: 1,2,4,7,8,9 A02064

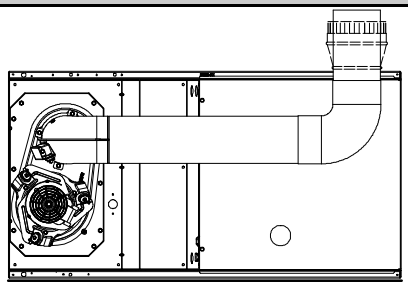

SEE NOTES: 1,2,4,5,7,8,9 A02065

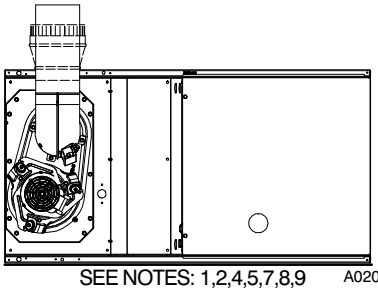

SEE NOTES: 1,2,4,5,7,8,9 A02066

HORIZONTAL LEFT VENT CONFIGURATIONS

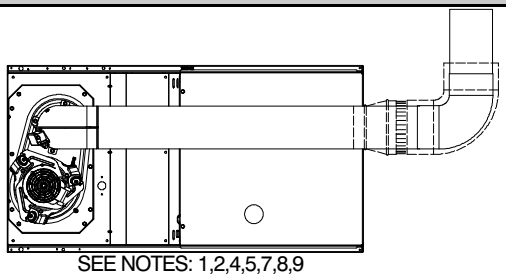

SEE NOTES: 1,2,4,5,7,8,9 A02067

Venting Notes

1. For common vent, vent connector sizing and vent material: United States–use the NFGC.
2. Immediately increase to 5 inch (102 mm) or 6 inch (152 mm) vent connector outside furnace casing when 5 inch (127 mm) vent connector is required, refer to Note 1 above.
3. Side outlet vent for upflow and downflow installations must use Type B vent immediately after exiting the furnace, expect when Downflow Vent Guard Kit is used in the downflow position.
4. Type–B vent where required, refer to Note 1 above.
5. A 4 inch(102 mm) single–wall (26 ga. min.) vent must be used inside furnace casing and when the NAHB00301VC Downflow Vent Guard Kit is used external to the furnace.
6. Accessory Downflow Vent Guard Kit is required in downflow installations with lower vent configuration.
7. Chimney Adapter Kit may be required for exterior masonry chimney applications. Refer to Chimney Adapter Kit for sizing and complete application details.
8. Secure vent connector to furnace elbow with (2) corrosion–resistant sheet metal screws, spaced approximately 180° apart.
9. Secure all other single wall vent connector joints with (3) corrosion resistant screws spaced approximately 120° apart. Secure Type–B vent connectors per vent connector manufacturer's recommendations.

MINIMUM CLEARANCES TO COMBUSTIBLE MATERIALS FOR ALL UNITS

This forced air furnace is equipped for use with natural gas at altitudes 0 – 10,000 ft (0 – 3,050m).

An accessory kit, supplied by the manufacturer, shall be used to convert to propane gas use or may be required for some natural gas applications.

This furnace is for indoor installation in a building constructed on site.

The furnace may be installed on combustible flooring in alcove or closet at minimum clearance as indicated by the diagram from combustible material.

This furnace may be used with a Type B–1 Vent and may be vented in common with other gas fired appliances.

This furnace is approved for UPFLOW, DOWNFLOW, and HORIZONTAL installations.

Downflow Positions:

† Installation on non–combustible floors only.
For Installation on combustible flooring only when installed on special base or coil assembly.

∅ 18 inch front clearance required for alcove.

* Indicate supply or return sides when furnace is in the horizontal position. Line contact only permissible between lines formed by intersections of the Top and two Sides of the furnace jacket, and building joists, studs or framing.

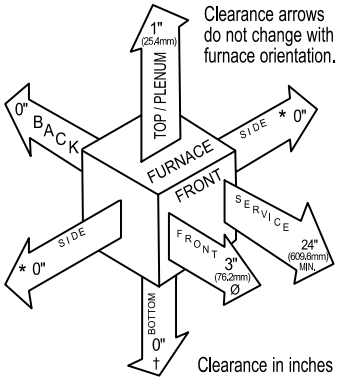

Vent Clearance to combustibles:
For Single Wall vents 6 inches (6 po).
For Type B-1 vent type 1 inch (1 po).

BLOWER PERFORMANCE DATA

MODEL SIZE	G8MVL0451412	G8MVL0701716	G8MVL0902116	G8MVL1102122	G8MVL1352422
DIRECT–DRIVE MOTOR Hp (PWM)	1/2	3/4	3/4	1	1
MOTOR FULL LOAD AMPS	6.8	10.1	8.4	10.9	10.9
RPM (Nominal)	1200				
BLOWER WHEEL DIAMETER X WIDTHS – in(mm)	10 x 6 (254 x 152)	11 x 8 (279 x 203	10 x 10 (254 x 254)	11 x 11 (279 x 279)	11 x 11 (279 x 279)

AIR DELIVERY – CFM (with filter)*

COOLING AND HEATING AIR DELIVERY – CFM (Bottom Return with Filter)

(SW1–5 and SW4–3 set to OFF. See notes 1 and 2.)

Unit Size	Selectable AC Switch Settiings			External Static Pressure (ESP)									
	SW2–8	SW2–7	SW2–6	0.1	0.2	0.3	0.4	0.5	0.6	0.7	0.8	0.9	1
045–12	OFF	OFF	OFF	1190	1140	1100	1065	1020	985	905	800	665	525
	OFF	OFF	ON	620	560	520	455	410	355	305	255	See note 4	
	OFF	ON	OFF	795	755	705	670	615	585	530	490	440	405
	OFF	ON	ON	1020	955	930	890	840	805	755	715	645	490
	ON	OFF	OFF	1190	1140	1100	1065	1020	985	905	800	665	525
	ON	OFF	ON	1455	1390	1325	1255	1175	1085	1000	880	755	575
	ON	ON	OFF	1455	1390	1325	1255	1175	1085	1000	880	755	575
	ON	ON	ON	1455	1390	1325	1255	1175	1085	1000	880	755	575
	Selectable CF Switch Settings			External Static Pressure (ESP)									
	SW2–5	SW2–4	SW2–3	0.1	0.2	0.3	0.4	0.5	0.6	0.7	0.8	0.9	1
	OFF	OFF	OFF	620	560	520	455	410	355	305	255	See note 4	
	OFF	OFF	ON	620	560	520	455	410	355	305	255	See note 4	
	OFF	ON	OFF	795	755	705	670	615	585	530	490	440	405
	OFF	ON	ON	1020	955	930	890	840	805	755	715	645	490
	ON	OFF	OFF	1190	1140	1100	1065	1020	985	905	800	665	525
	ON	OFF	ON	1455	1390	1325	1255	1175	1085	1000	880	755	575
	ON	ON	OFF	1455	1390	1325	1255	1175	1085	1000	880	755	575
	ON	ON	ON	1455	1390	1325	1255	1175	1085	1000	880	755	575
	Maximum Clg Airflow[2]			1455	1390	1325	1255	1175	1085	1000	880	755	575
	High Heat Airflow[3]			915	860	825	790	735	700	650	610	550	450
	Low Heat Airflow[3]			780	730	685	635	585	545	495	450	400	370

Unit Size	Selectable AC Switch Settings			External Static Pressure (ESP)									
	SW2–8	SW2–7	SW2–6	0.1	0.2	0.3	0.4	0.5	0.6	0.7	0.8	0.9	1
070–16	OFF	OFF	OFF	1615	1570	1530	1490	1450	1405	1365	1325	1280	1210
	OFF	OFF	ON	640	See note 4								
	OFF	ON	OFF	840	775	700	640	See note 4					
	OFF	ON	ON	1045	980	920	860	805	750	690	640	See note 4	
	ON	OFF	OFF	1220	1175	1120	1075	1025	970	925	875	820	775
	ON	OFF	ON	1390	1335	1290	1245	1200	1155	1105	1055	1015	970
	ON	ON	OFF	1615	1570	1530	1490	1450	1405	1365	1325	1280	1210
	ON	ON	ON	1890	1850	1810	1750	1685	1615	1545	1475	1395	1275
	Selectable CF Switch Settings			External Static Pressure (ESP)									
	SW2–5	SW2–4	SW2–3	0.1	0.2	0.3	0.4	0.5	0.6	0.7	0.8	0.9	1
	OFF	OFF	OFF	640	See note 4								
	OFF	OFF	ON	640	See note 4								
	OFF	ON	OFF	840	775	700	640	See note 4					
	OFF	ON	ON	1045	980	920	860	805	750	690	640	See note 4	
	ON	OFF	OFF	1220	1175	1120	1075	1025	970	925	875	820	775
	ON	OFF	ON	1390	1335	1290	1245	1200	1155	1105	1055	1015	970
	ON	ON	OFF	1615	1570	1530	1490	1450	1405	1365	1325	1280	1210
	ON	ON	ON	1890	1850	1810	1750	1685	1615	1545	1475	1395	1275
	Maximum Clg Airflow[2]			1890	1850	1810	1750	1685	1615	1545	1475	1395	1275
	High Heat Airflow[3]			1540	1490	1450	1410	1365	1320	1275	1235	1190	1140
	Low Heat Airflow[3]			1370	1320	1275	1225	1180	1135	1085	1040	995	950

Air Delivery – CFM (with filter)* (continued)

Unit Size	Selectable AC Switch Settings			External Static Pressure (ESP)									
	SW2–8	SW2–7	SW2–6	0.1	0.2	0.3	0.4	0.5	0.6	0.7	0.8	0.9	1
090–16	OFF	OFF	OFF	1625	1580	1535	1490	1445	1390	1325	1215	1070	910
	OFF	OFF	ON	555	See note 4								
	OFF	ON	OFF	845	770	670	595	See note 4					
	OFF	ON	ON	1010	950	880	790	725	670	580	See note 4		
	ON	OFF	OFF	1210	1155	1105	1035	970	910	850	800	730	660
	ON	OFF	ON	1405	1360	1305	1255	1185	1130	1070	1015	960	875
	ON	ON	OFF	1625	1580	1535	1490	1445	1390	1325	1215	1070	910
	ON	ON	ON	2095	2010	1935	1855	1770	1675	1540	1300	1120	940
	Selectable CF Switch Settings			External Static Pressure (ESP)									
	SW2–5	SW2–4	SW2–3	0.1	0.2	0.3	0.4	0.5	0.6	0.7	0.8	0.9	1
	OFF	OFF	OFF	555	See note 4								
	OFF	OFF	ON	555	See note 4								
	OFF	ON	OFF	845	770	670	595	See note 4					
	OFF	ON	ON	1010	950	880	790	725	670	580	See note 4		
	ON	OFF	OFF	1210	1155	1105	1035	970	910	850	800	730	660
	ON	OFF	ON	1405	1360	1305	1255	1185	1130	1070	1015	960	875
	ON	ON	OFF	1625	1580	1535	1490	1445	1390	1325	1215	1070	910
	ON	ON	ON	2095	2010	1935	1855	1770	1675	1540	1300	1120	940
	Maximum Clg Airflow[2]			2095	2010	1935	1855	1770	1675	1540	1300	1120	940
	High Heat Airflow[3]			1735	1685	1630	1580	1520	1455	1375	1235	1085	915
	Low Heat Airflow[3]			1230	1175	1125	1055	995	930	875	820	755	690

Unit Size	Selectable AC Switch Settings			External Static Pressure (ESP)									
	SW2–8	SW2–7	SW2–6	0.1	0.2	0.3	0.4	0.5	0.6	0.7	0.8	0.9	1
110–22	OFF	OFF	OFF	2055	2000	1950	1900	1840	1790	1740	1675	1625	1565
	OFF	OFF	ON	855	755	See note 4							
	OFF	ON	OFF	1060	985	875	800	700	See note 4				
	OFF	ON	ON	1250	1180	1095	1025	925	860	775	715	See note 4	
	ON	OFF	OFF	1445	1380	1320	1235	1175	1100	1035	955	900	825
	ON	OFF	ON	1685	1630	1560	1505	1445	1375	1320	1265	1195	1140
	ON	ON	OFF	2055	2000	1950	1900	1840	1790	1740	1675	1625	1565
	ON	ON	ON	2465	2415	2365	2305	2230	2140	2045	1925	1805	1655
	Selectable CF Switch Settings			External Static Pressure (ESP)									
	SW2–5	SW2–4	SW2–3	0.1	0.2	0.3	0.4	0.5	0.6	0.7	0.8	0.9	1
	OFF	OFF	OFF	855	755	See note 4							
	OFF	OFF	ON	655	550	See note 4							
	OFF	ON	OFF	855	755	See note 4							
	OFF	ON	ON	1060	985	875	800	700	See note 4				
	ON	OFF	OFF	1250	1180	1095	1025	925	860	775	715	See note 4	
	ON	OFF	ON	1445	1380	1320	1235	1175	1100	1035	955	900	825
	ON	ON	OFF	1685	1630	1560	1505	1445	1375	1320	1265	1195	1140
	ON	ON	ON	2055	2000	1950	1900	1840	1790	1740	1675	1625	1565
	Maximum Clg Airflow[2]			2465	2415	2365	2305	2230	2140	2045	1925	1805	1655
	High Heat Airflow[3]			2105	2055	2005	1955	1895	1850	1795	1735	1665	1580
	Low Heat Airflow[3]			1740	1685	1620	1560	1505	1440	1385	1325	1260	1205

Air Delivery – CFM (with filter)* (continued)

Unit Size	Selectable AC Switch Settings			External Static Pressure (ESP)									
	SW2–8	SW2–7	SW2–6	0.1	0.2	0.3	0.4	0.5	0.6	0.7	0.8	0.9	1
135–22	OFF	OFF	OFF	2040	1985	1930	1880	1830	1775	1715	1660	1595	1510
	OFF	OFF	ON	850	740	See note 4							
	OFF	ON	OFF	1040	960	865	755	See note 4					
	OFF	ON	ON	1245	1170	1080	1005	920	835	750	See note 4		
	ON	OFF	OFF	1450	1385	1305	1245	1180	1085	1015	935	880	805
	ON	OFF	ON	1670	1605	1540	1480	1425	1350	1280	1220	1135	1070
	ON	ON	OFF	2040	1985	1930	1880	1830	1775	1715	1660	1595	1510
	ON	ON	ON	2520	2455	2405	2350	2290	2195	2090	1965	1815	1615
	Selectable CF Switch Settings			External Static Pressure (ESP)									
	SW2–5	SW2–4	SW2–3	0.1	0.2	0.3	0.4	0.5	0.6	0.7	0.8	0.9	1
	OFF	OFF	OFF	850	740	See note 4							
	OFF	OFF	ON	640	See note 4								
	OFF	ON	OFF	850	740	See note 4							
	OFF	ON	ON	1040	960	865	755	See note 4					
	ON	OFF	OFF	1245	1170	1080	1005	920	835	750	See note 4		
	ON	OFF	ON	1450	1385	1305	1245	1180	1085	1015	935	880	805
	ON	ON	OFF	1670	1605	1540	1480	1425	1350	1280	1220	1135	1070
	ON	ON	ON	2040	1985	1930	1880	1830	1775	1715	1660	1595	1510
	Maximum Clg Airflow[2]			2520	2455	2405	2350	2290	2195	2090	1965	1815	1615
	High Heat Airflow[3]			2260	2205	2150	2100	2045	1985	1925	1855	1745	1600
	Low Heat Airflow[3]			2005	1950	1895	1845	1790	1735	1675	1620	1550	1475

1. Nominal 350 CFM/ton cooling airflow is delivered with SW1–5 and SW4–3 set to OFF
   Set SW1–5 to ON for nominal 400CFM/ton (+15% airflow)
   Set SW4–3 to ON for nominal 325 CFM/ton (–7% airflow)
   Set both SW1–5 and SW4–3 to ON for nominal 370CFM/ton (+7% airflow)
   The above adjustments in airflow are subject to motor horsepower range/capacity
2. Maximum cooling airflow is achieved when switches SW2–6, SW2–7, SW2–8 and SW1–5 are set to ON, and SW4–3 is set to OFF
3. All heating CFM's are when low heat rise adjustment switch SW1–3 and comfort/efficiency adjustment switch SW1–4 are both set to OFF
4. Ductwork must be sized for high–heating CFM within the operational range of ESP. Operation within the blank areas of the chart is not recommended because high–heat operation will be above 1.0 ESP
5. All airflows on 21" (533 mm) casing size furnaces are 5% less on side–return only installations
6. Side returns for 24.5" (622 mm) casing sizes require two sides, or a side and bottom to allow sufficient airflow at the return of the furnace
7. Airflows over 1800 CFM require bottom return, two–side return, or bottom and side return or excessive watt draw may result. A minimum filter size of 20x25" (508 x 635 mm) is required

ACCESSORIES						
PART NUMBER	DESCRIPTION	0451412B	0701716B	0902116B	1102122B	1352422B
NAHB00501FF	External Bottom Filter Rack, 14 inch (14 x 25 inch washable filter included)	X				
NAHB00601FF	External Bottom Filter Rack, 17 inch (16 x 25 inch washable filter included)		X			
NAHB00701FF	External Bottom Filter Rack, 21 inch (20 x 25 inch washable filter included)			X	X	
NAHB00801FF	External Bottom Filter Rack, 24 inch (24 x 25 inch washable filter included)					X
NAHA00506FB†	Washable filter, 1 inch 16 X 25 (6 pack)	X	X			
NAHA00706FB	Washable filter, 1 inch 24 X 25 (6 pack)			X	X	X
NAHA01101SB	Combustible Floor Base (Not required when evaporator coil case is used for downflow)	X	X	X	X	X
NAHB00301VC	Downflow Vent Guard (Not required when vent is routed through cabinet)	X	X	X	X	X
NAHA00401DH	Chimney Adapter Kit 4–in. vent	X	X	X	X	
NAHA00301DH	Chimney Adapter Kit 5–in. vent					X
NAHB01001LP*	Natural–to–Propane Conversion Kit	X	X	X	X	X
NAHB01001NG*	Propane–to–Natural Conversion Kit	X	X	X	X	X
NAHA00201HL	High Altitude Kit	X	X	X	X	X
NAHA00801WK	Twinning Kit for two furnaces of same model and series			X	X	X
TSTAT0201CW	Observer Control System – Self Configuring Communicating Control	X	X	X	X	X

X Accessory available
† Suitable for 17 inch external bottom filter rack.
* Factory authorized and field installed. Gas conversion kits are CSA recognized.

Copyright 2018 International Comfort Products
Lewisburg, Tennessee 37091 USA
www.GoHeil.com

Specifications subject to change without notice.