G80CTL (Series B)
80% AFUE, Two-Stage
Variable Speed, 4-Way Multipoise, Gas Furnace

ICP COMMERCIAL

Product Data

SYST0101CW Recommended (sold separately)

A200433

⚠ WARNING

This furnace is not designed for use in mobile homes, trailers, or recreational vehicles. Such use could result in property damage and/or death.

DESIGN CERTIFIED

AHRI CERTIFIED™ www.ahridirectory.org

Use of the AHRI Certified TM Mark indicates a manufacturer's participation in the program. For verification of certification for individual products, go to www.ahridirectory.org .

Certified System ISO 9001 Quality

A200115

EASIER TO SELL

- 80% AFUE
- Cabinet air leakage less than 2.0% at 1.0 in. w.c. and cabinet air leakage less than 1.4% at 0.5 in. w.c. when tested in accordance with ASHRAE standard 193
- Supports two-stage cooling units
- ION™ Communicating Control System
- Flame roll-out sensors standard
- Category I venting
- Blocked vent switch
- Dehumidification feature in cooling
- 24 VAC humidifier terminal
- Electronic air cleaner terminal
- All units can be installed in air quality management districts with a 40 ng/J NOx emissions requirements

TOUGHER

- Variable speed ECM blower motor
- Adjustable heating blower OFF delay
- Factory set blower ON delay
- RPJ aluminized steel heat exchanger
- High temperature limit control prevents overheating
- Direct ignition with Silicon Nitride ignitor
- One piece pre-painted steel cabinet
- On-board NFC antenna makes setup a tap away when using the Service Technician App.
- 3-digit display shows fault codes and furnace status
- RAT and SAT thermistors can provide temperature rise
- Two-stage induced draft blower
- In-shot burners
- Insulated blower compartment

EASIER TO INSTALL AND SERVICE

- 33-1/3" (847mm) high, for ease of installation
- Quarter turn knobs for easy door removal and secure attachment
- Convertible to propane gas conversion accessory kit
- Four position - upflow/downflow/horizontal (left/right) installation
- Three position vent elbow capability
- Through the casing flue pipe for counterflow applications
- Common venting with other Category I appliances
- Masonry chimney adapter available
- Self diagnostics
- Slide out blower assembly

LIMITED WARRANTY*

- 10 year No Hassle Replacement™ limited warranty
- Lifetime heat exchanger limited warranty with timely registration
- 5 year parts limited warranty
  - additional 5 year parts limited warranty with timely registration

* For residential applications only, See warranty certificate for complete details and restrictions, including warranty coverage of other applications.

DIMENSIONAL DATA

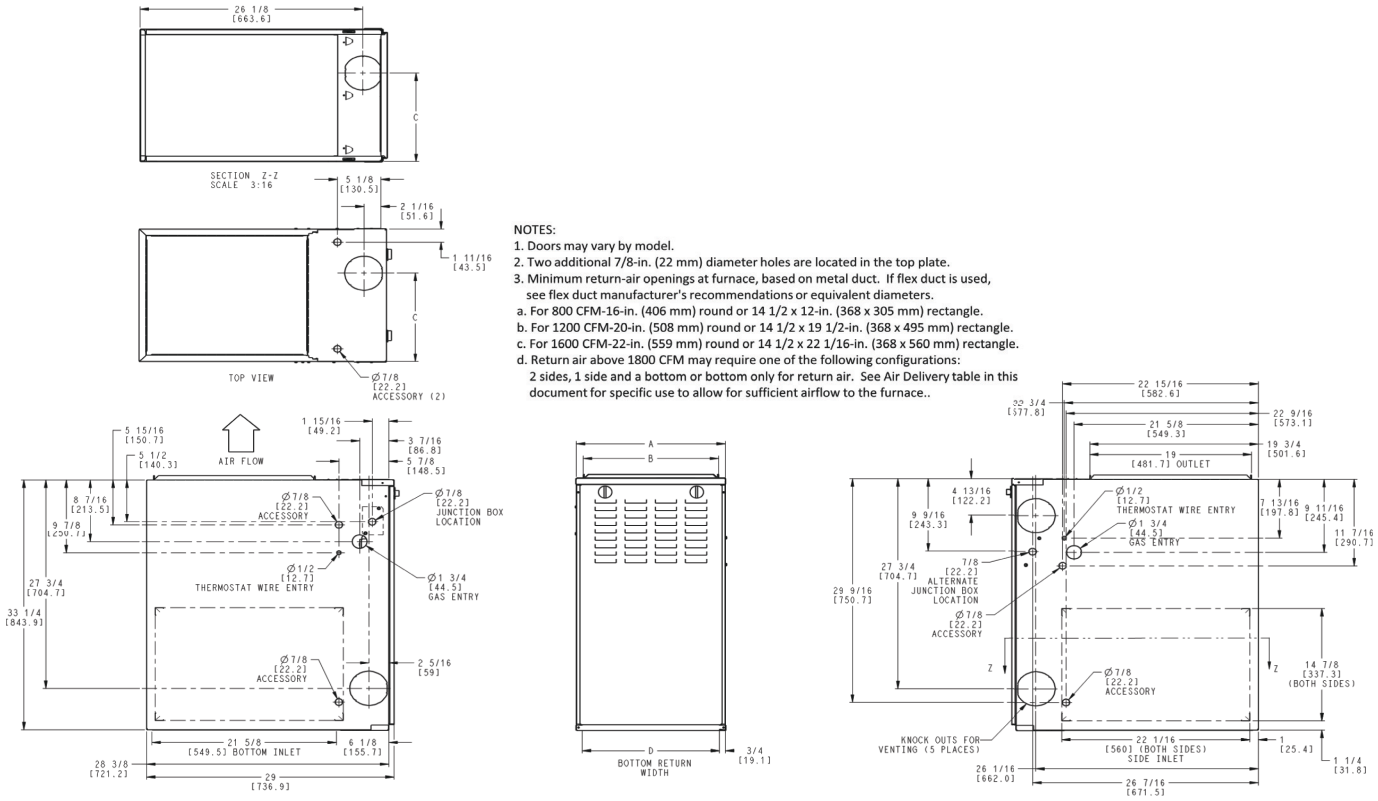

NOTES:
1. Doors may vary by model.
2. Two additional 7/8-in. (22 mm) diameter holes are located in the top plate.
3. Minimum return-air openings at furnace, based on metal duct. If flex duct is used, see flex duct manufacturer's recommendations or equivalent diameters.
   a. For 800 CFM-16-in. (406 mm) round or 14 1/2 x 12-in. (368 x 305 mm) rectangle.
   b. For 1200 CFM-20-in. (508 mm) round or 14 1/2 x 19 1/2-in. (368 x 495 mm) rectangle.
   c. For 1600 CFM-22-in. (559 mm) round or 14 1/2 x 22 1/16-in. (368 x 560 mm) rectangle.
   d. Return air above 1800 CFM may require one of the following configurations:
      2 sides, 1 side and a bottom or bottom only for return air. See Air Delivery table in this document for specific use to allow for sufficient airflow to the furnace..

NOTE: ALL DIMENSIONS IN INCH (MM)

U.S. ECCN: Not Subject to Regulation (N.S.R.)

A190084

Dimensions

FURNACE SIZE	A	B	C	D	VENT CONNECTION SIZE	SHIP WT. LB (KG)
	CABINET WIDTH	OUTLET WIDTH	TOP AND BOTTOM FLUE COLLAR	BOTTOM INLET WIDTH		
0451712	17-1/2 (445)	15-7/8 (403)	11-9/16 (294)	16 (406)	4 (102)	122.5 (55.6)
0701412	14-3/16 (360)	12-9/16 (319)	9-5/16 (237)	12-11/16 (322)	4 (102)	119.5 (54.2)
0701716	17-1/2 (445)	15-7/8 (403)	11-9/16 (294)	16 (406)	4 (102)	132 (59.9)
0702120	21 (533)	19-3/8 (492)	13-5/16 (338)	19-1/2 (495)	4 (102)	137 (62.1)
0901716	17-1/2 (445)	15-7/8 (403)	11-9/16 (294)	16 (406)	4 (102)	134.5 (61.0)
0902120	21 (533)	19-3/8 (492)	13-5/16 (338)	19-1/2 (495)	4 (102)	147.5 (66.9)
1102120	21 (533)	19-3/8 (492)	13-5/16 (338)	19-1/2 (495)	4 (102)	152 (68.9)
1352422	24-1/2 (622)	22-7/8 (581)	15-1/16 (383)	23 (584)	4 (102)*	174.5 (79.2)

*. 135 size furnace require a 5 or 6-in. (127 or 152 mm) vent. Use a vent adapter between furnace and vent stack. See Installation Instructions for complete installation requirements.

Manufacturer reserves the right to change, at any time, specifications and designs without notice and without obligations.

MODEL NUMBER NOMENCLATURE

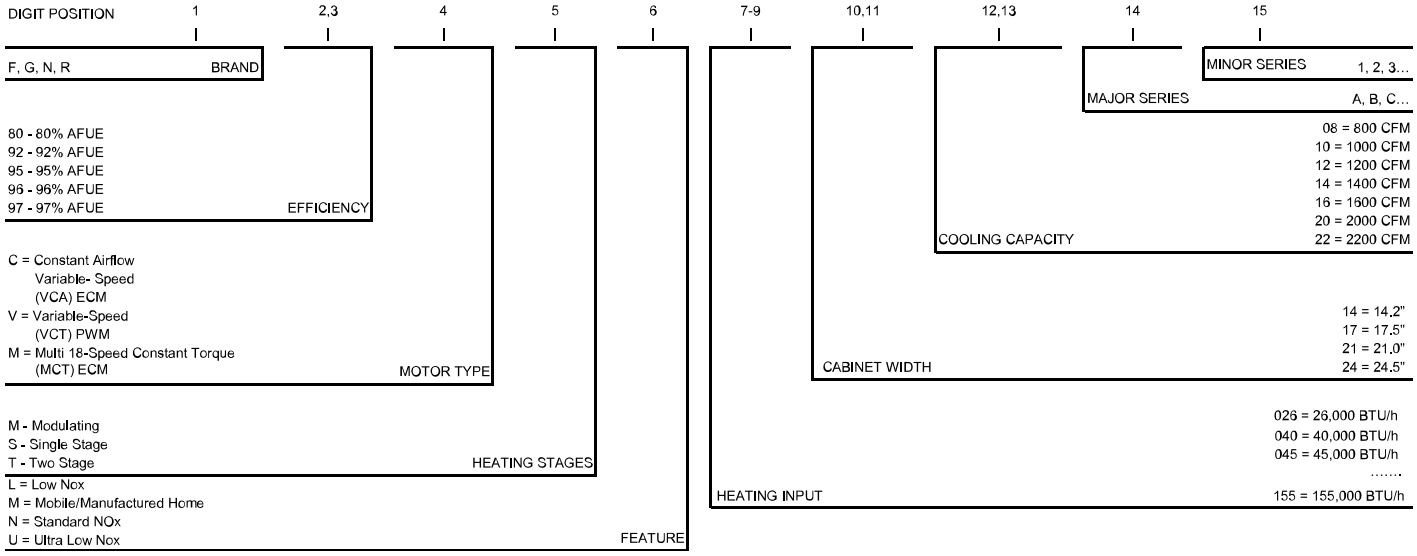

A221575

FURNACE COMPONENTS

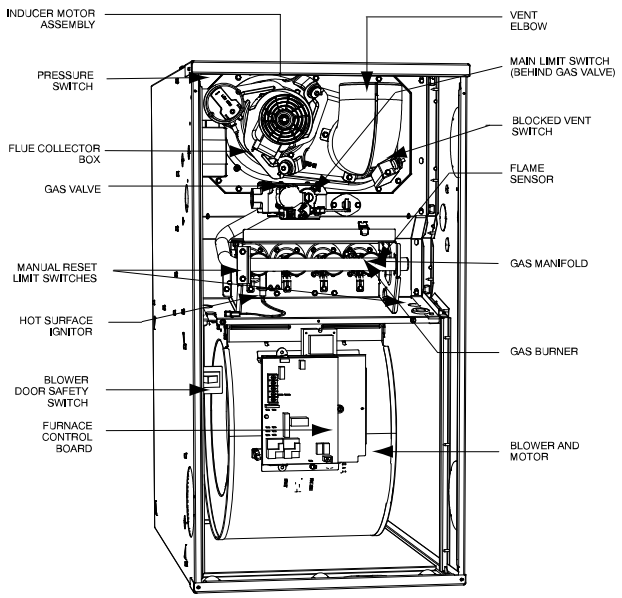

A190086

NOTE: The furnaces are factory shipped for use with natural gas. These furnaces can be field-converted for propane gas with a factory-authorized and listed accessory conversion kit.

CLEARANCES

WARNING

ELECTRIC SHOCK AND MOVING PARTS HAZARD
High voltage and rotating fan blades may be present in blower compartment when door switch is pressed. Keep hands clear.

WARNING

FIRE, EXPLOSION, ASPHYXIATION HAZARD

Improper adjustment, alteration, service, maintenance, or installation can cause serious injury or death.

Read and follow instructions and precautions in User's Information Manual provided with this furnace. Installation and service must be performed by a qualified service agency or the gas supplier.

CAUTION

Check entire gas assembly for leaks after lighting this appliance.

INSTALLATION

1. This furnace must be installed in accordance with the manufacturer's instructions and local codes. In the absence of local codes, follow the National Fuel Gas Code ANSI Z223.1 / NFPA54 or CSA B-149. 1 Gas Installation Code.
2. This furnace must be installed so there are provisions for combustion and ventilation air. See manufacturer's installation information provided with this appliance.

OPERATION

This furnace is equipped with manual reset limit switch(es) in burner compartment to protect against overheat conditions that can result from inadequate combustion air supply or blocked vent conditions.

1. Do not bypass limit switches.
2. If a limit opens, call a qualified serviceman to correct the condition and reset limit switch.

INSTALLATION

MINIMUM INCHES CLEARANCE TO COMBUSTIBLE CONSTRUCTION

This forced air furnace is equipped for use with natural gas at altitudes 0 - 10,000 ft (0 - 3,050m).

An accessory kit, supplied by the manufacturer, shall be used to convert to propane gas use or may be required for some natural gas applications.

This furnace is for indoor installation in a building constructed on site.

This furnace may be installed on combustible flooring in alcove or closet at minimum clearance as indicated by the diagram from combustible material.

This furnace may be used with a Type B-1 Vent and may be vented in common with other gas fired appliances.

This furnace is approved for UPFLOW, DOWNFLOW, and HORIZONTAL installations.

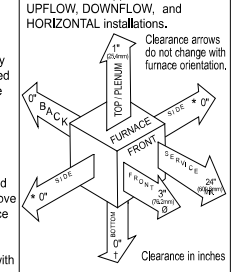

Vent Clearance to combustibles:
For Single Wall vents 6 inches (6 po).
For Type B-1 vent type 1 inch (1 po).

MINIMUM INCHES CLEARANCE TO COMBUSTIBLE CONSTRUCTION

DOWNFLOW POSITIONS:

† Installation on non-combustible floors only.
For installation on combustible flooring only when installed on a manufacturer approved special base kit or manufacturer recommended coil assembly.

Ø 18 inches front clearance required for alcove.

* Indicates supply or return sides when furnace is in the horizontal position. Line contact only permissible between lines formed by intersections of the Top and two Sides of the furnace jacket, and building joists, studs or framing.

336996-101 REV.F

A220231

SPECIFICATIONS

UNIT SIZE			0451712	0701412	0701716	0702120	0901716	0902120	1102120	1352422
HEATING AND CAPACITY AND EFFICIENCY										
Input BTUh*	All Standard, Low NOx Upflow	High	44,000	66,000	66,000	66,000	88,000	88,000	110,000	132,000
		Low	29,000	43,500	43,500	43,500	58,000	58,000	72,500	87,000
	Low Nox Downflow/ Horizontal	High	42,000	63,000	63,000	63,000	84,000	84,000	105,000	126,000
		Low	29,000	43,500	43,500	43,500	58,000	58,000	72,500	87,000
Output Capacity (BTUh)†	All Standard, Low NOx Upflow	High	35,000	54,000	53,000	53,000	71,000	71,000	89,000	107,000
		Low	23,000	35,000	35,000	35,000	47,000	47,000	59,000	70,000
	Low Nox Downflow/ Horizontal	High	34,000	51,000	51,000	51,000	68,000	68,000	85,000	102,000
		Low	23,000	35,000	35,000	35,000	47,000	47,000	59,000	70,000
Certified Temperature Rise Range - °F (°C)		High	30-60 (17-33)	30-60 (17-33)	25-55 (14-31)	25-55 (14-31)	40-70 (22-39)	25-55 (14-31)	40-70 (22-39)	40-70 (22-39)
		Low	20-50 (11-28)	30-60 (17-33)	15-45 (8-25)	15-45 (8-25)	30-60 (17-33)	15-45 (8-25)	25-55 (14-31)	25-55 (14-31)
AFUE†			80%							
AIRFLOW CAPACITY AND BLOWER DATA										
Rated Certified External Static Pressure	Heating		0.10	0.12	0.12	0.12	0.15	0.15	0.20	0.20
	Cooling		0.50	0.50	0.50	0.50	0.50	0.50	0.50	0.50
Airflow CFM @ Rated ESP (CFM)‡	High Heat		630	1030	1175	1174	1175	1650	1445	1815
	Low Heat		520	650	1040	1025	965	1445	1315	1700
	Cooling		1565	1355	1650	2070	1455	2270	2245	2240
Direct Drive Motor HP			3/4	1/2	3/4	1	1/2	1	1	1
Motor Full Load Amps			8.8	6.7	8.8	11.5	6.7	11.5	11.5	11.7
Heating Blower Control (Htg Off-Delay)			Adjustable: 90, 120 (factory-set), 150, 180 seconds							
Cooling Blower Control (Time Delay Relay)			Adjustable: 90 (factory-set), 5, 30, 60 seconds							
Blower Wheel Diameter x Width - In. (mm)			11 x 8 (279x203)	10 x 6 (254x152)	11 x 8 (279x203)	11 x 10 (279x254)	10 x 8 (254x203)	11 x 11 (279x279)	11 x 10 (279x254)	11 x 11 (279x279)
Air Filtration System			Field Supplied Filter							
Filter used for Certified Watt Data			325531-40**							
ELECTRICAL DATA										
Unit Volts-Hertz-Phase			115-60-1							
Operating Voltage Range	Min-Max		104-127							
Maximum Unit Amps			10.5	8.0	10.5	13.8	8.6	14.4	14.7	13.9
Unit Ampacity			13.8	10.7	13.8	18.0	11.3	18.5	18.8	17.8
Maximum Wire Length (Measure 1 way in Ft. (M)			26 (7.9)	34 (10.4)	26 (7.9)	31 (9.4)	32 (9.8)	31 (9.4)	30 (9.1)	32 (9.8)
Minimum Wire Size	AWG		14	14	14	12	14	12	12	12
Max. Fuse/Ckt Bkr Size (Time-Delay Type Recommended)	Amps		15	15	15	20	15	20	20	20
Transformer Capacity (24 VAC output)			40VA							

Manufacturer reserves the right to change, at any time, specifications and designs without notice and without obligations.

SPECIFICATIONS (Continued)

UNIT SIZE		0451712	0701412	0701716	0702120	0901716	0902120	1102120	1352422
External Control Power Available	Heating	24VA							
	Cooling	35VA							
GAS CONTROLS									
Burners		2	3	3	3	4	4	5	6
Gas Connection Size		1/2-in. NPT							
Gas Valve (Redundant)	Mfr	WhiteRodgers™							
Min. inlet pressure	(in.w.c.)	4.5 (Natural Gas)							
Max. inlet pressure	(in.w.c.)	13.6 (Natural Gas)							
Ignition Device		Silicon Nitride							
Factory installed orifice		Size 43							
CONNECTIONS									
Communication System		ION™ Communicating Control SYST0101CW							
Thermostat Connections		R, W/W1, W2, Y/Y2, Y1, G, Com 24V, DHUM							
Accessory Connections		EAC-1 (115 VAC); HUM (24 VAC); 1-STG AC (via Y/Y2)							

*. Gas input ratings are certified for elevations to 2000 ft. (610 M). In USA, For elevations above 2000 ft (610 M), reduce ratings 4 percent for each 1000 ft (305 M) above sea level. Refer to National Fuel Gas Code NFPA 54/ANSI Z223.1 Table F.4 or furnace installation instructions.

†. Capacity in accordance with U.S. Government DOE test procedures.

‡. Airflow shown is for bottom only return-air supply for the as-shipped speed tap. For air delivery above 1800 CFM, see Air Delivery table for other options. A filter is required for each return-air supply. An airflow reduction of up to 7 percent may occur when using the factory-specified 4-5/16-in. (110 mm) wide, high efficiency media filter.

**. See Accessory List for part numbers available.

AIR DELIVERY—CFM (With Filter)*

0451712													
Available Cooling Airflow Settings (CFM)	488	525	555	600	650	700	740	*800	875	925	975	1000	†1050
	1138	1200	1225	1300	1400	1480	1600						
Available Constant Fan Airflow Settings (CFM)	‡488	525	555	600	650	700	740	800	875	925	975	1000	1050
	1138	1200	1225										
Airflow reduces by 2% - 3% per 0.1 of ESP above the noted static for these airflow settings	Airflow		ESP (in. w.c.)										
	1400		0.7										
	1480		0.5										
	1600		0.3										
Max Cooling ESP	0.1	0.2	0.3	0.4	0.5	0.6	0.7	0.8	0.9	1			
****Max Cooling CFM**	1695	1670	1640	1605	1565	1530	1490	1445	1400	1360			

0701412													
Available Cooling Airflow Settings (CFM)	400	450	488	525	555	600	650	700	740	*800	875	925	975
	1000	†1050	1138	1200	1225	1300	1400						
Available Constant Fan Airflow Settings (CFM)	‡400	450	488	525	555	600	650	700	740	800	875	925	975
	1000	1050	1138										
Airflow reduces by 2% - 3% per 0.1 of ESP above the noted static for these airflow settings	Airflow		ESP (in. w.c.)										
	1200		0.8										
	1225		0.8										
	1300		0.6										
	1400		0.4										
Max Cooling ESP	0.1	0.2	0.3	0.4	0.5	0.6	0.7	0.8	0.9	1			
****Max Cooling CFM**	1430	1430	1420	1390	1355	1315	1275	1235	1195	1155			

0701716													
Available Cooling Airflow Settings (CFM)	488	525	555	600	650	700	740	800	875	925	975	1000	*1050
	1138	1200	1225	1300	†1400	1480	1600						
Available Constant Fan Airflow Settings (CFM)	‡488	525	555	600	650	700	740	800	875	925	975	1000	1050
	1138	1200	1225										
Airflow reduces by 2% - 3% per 0.1 of ESP above the noted static for these airflow settings	Airflow Setting		ESP (in. w.c.)										
	1480		0.9										
	1600		0.7										
Max Cooling ESP	0.1	0.2	0.3	0.4	0.5	0.6	0.7	0.8	0.9	1			
****Max Cooling CFM**	1655	1655	1655	1655	1650	1645	1615	1570	1520	1475			

0702120													
Available Cooling Airflow Settings (CFM)	650	700	740	800	875	925	975	1000	1050	1138	1200	1225	*1300
	1400	1480	1600	1625	†1750	1850	1911	2000					
Available Constant Fan Airflow Settings (CFM)	‡650	700	740	800	875	925	975	1000	1050	1138	1200	1225	1300
	1400	1480	1600										
Airflow reduces by 2% - 3% per 0.1 of ESP above the noted static for these airflow settings	Airflow		ESP (in. w.c.)										
	1850		0.9										
	1911		0.8										
	2000		0.5										
Max Cooling ESP	0.1	0.2	0.3	0.4	0.5	0.6	0.7	0.8	0.9	1			
****Max Cooling CFM**	2095	2095	2100	2100	2070	2035	1995	1960	1920	1880			

AIR DELIVERY—CFM (With Filter)* (Continued)

0901716													
Available Cooling Airflow Settings (CFM)	400	450	488	525	555	600	650	700	740	800	875	925	975
	1000	*1050	1138	1200	1225	1300	†1400	1480	1600				
Available Constant Fan Airflow Settings (CFM)	‡400	450	488	525	555	600	650	700	740	800	875	925	975
	1000	1050	1138										
Airflow reduces by 2% - 3% per 0.1 of ESP above the noted static for these airflow settings	Airflow		ESP (in. w.c.)										
	1300		0.9										
	1400		0.7										
	1480		0.5										
	1600		0.1										
Max Cooling ESP	0.1	0.2	0.3	0.4	0.5	0.6	0.7	0.8	0.9	1			
****Max Cooling CFM**	1595	1560	1525	1490	1455	1420	1385	1340	1280	1220			

0902120													
Available Cooling Airflow Settings (CFM)	650	700	740	800	875	925	975	1000	1050	1138	1200	1225	*1300
	1400	1480	1600	1625	†1750	1850	1911	2000	2100	2179	2200		
Available Constant Fan Airflow Settings (CFM)	‡650	700	740	800	875	925	975	1000	1050	1138	1200	1225	1300
	1400	1480	1600										
Airflow reduces by 2% - 3% per 0.1 of ESP above the noted static for these airflow settings	Airflow Setting		ESP (in. w.c.)										
	2000		0.8										
	2100		0.7										
	2179		0.6										
	2200		0.5										
Max Cooling ESP	0.1	0.2	0.3	0.4	0.5	0.6	0.7	0.8	0.9	1			
****Max Cooling CFM**	2290	2290	2290	2285	2270	2230	2185	2130	2070	2015			

1102120													
Available Cooling Airflow Settings (CFM)	650	700	740	800	875	925	975	1000	1050	1138	1200	1225	*1300
	1400	1480	1600	1625	†1750	1850	1911	2000	2100	2179	2200		
Available Constant Fan Airflow Settings (CFM)	‡650	700	740	800	875	925	975	1000	1050	1138	1200	1225	1300
	1400	1480	1600										
Airflow reduces by 2% - 3% per 0.1 of ESP above the noted static for these airflow settings	Airflow Setting		ESP (in. w.c.)										
	2000		0.9										
	2100		0.7										
	2179		0.6										
	2200		0.5										
Max Cooling ESP	0.1	0.2	0.3	0.4	0.5	0.6	0.7	0.8	0.9	1			
****Max Cooling CFM**	2270	2270	2270	2270	2245	2200	2150	2100	2050	1995			

1352422													
Available Cooling Airflow Settings (CFM)	550	600	650	700	740	800	875	925	975	1000	1050	1138	1200
	1225	1300	*1400	1480	1600	1625	1750	1850	†1911	2000	2100	2179	
Available Constant Fan Airflow Settings (CFM)	‡550	600	650	700	740	800	875	925	975	1000	1050	1138	1200
	1225	1300	1400										
Airflow reduces by 2% - 3% per 0.1 of ESP above the noted static for these airflow settings	Airflow Setting		ESP (in. w.c.)										
	1911		0.9										
	2000		0.7										
	2100		0.6										
	2250		0.4										
Max Cooling ESP	0.1	0.2	0.3	0.4	0.5	0.6	0.7	0.8	0.9	1			
****Max Cooling CFM**	2270	2255	2255	2245	2240	2200	2135	2070	2010	1945			

*. Low Cooling Default
†. High Cooling Default
‡. Constant Fan Default Not Recommended
**. Max Cooling values are test CFM all other airflows are standatd CFM

TYPICAL WIRING SCHEMATIC

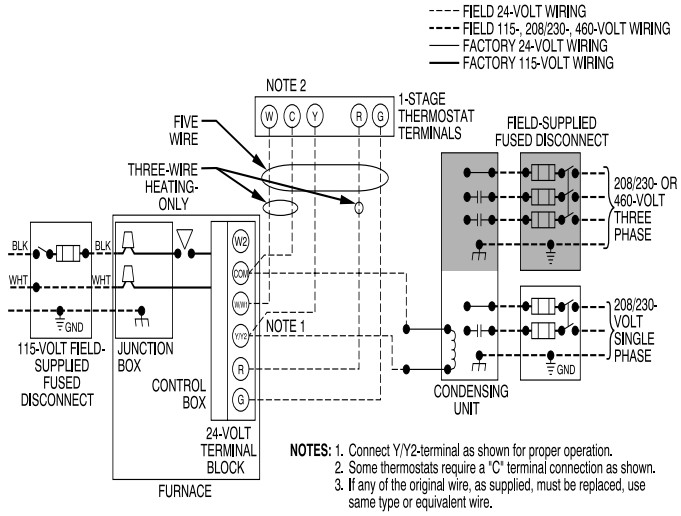

A95236

FURNACE CONTROL BOARD

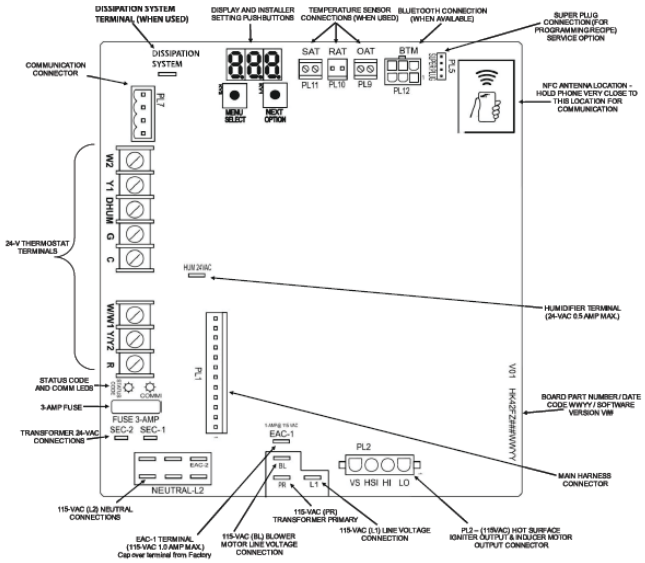

A230451

VENTING CONFIGURATIONS

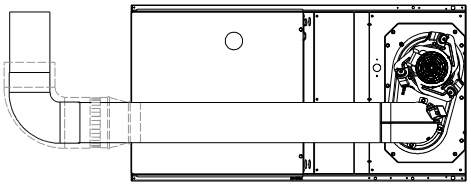

SEE NOTES: 1,2,4,5,7,8,9

HORIZONTAL RIGHT

A02068

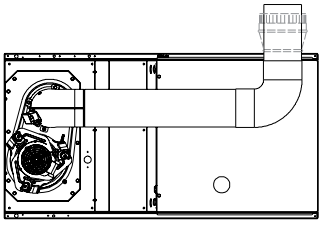

SEE NOTES: 1,2,4,5,7,8,9

HORIZONTAL LEFT

A02065

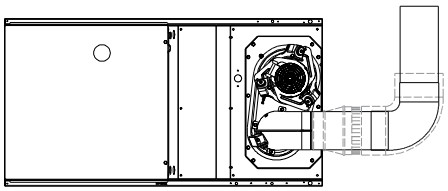

SEE NOTES: 1,2,4,7,8,9

HORIZONTAL RIGHT

A02069

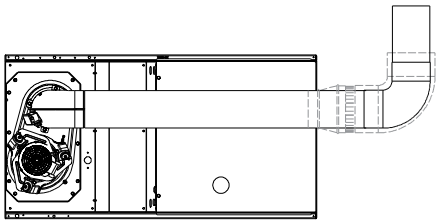

SEE NOTES: 1,2,4,5,7,8,9

HORIZONTAL LEFT

A02067

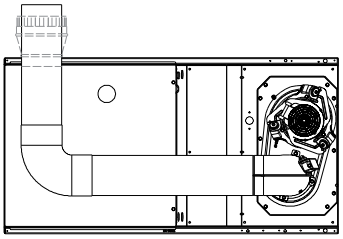

SEE NOTES: 1,2,4,5,7,8,9

HORIZONTAL RIGHT

A02070

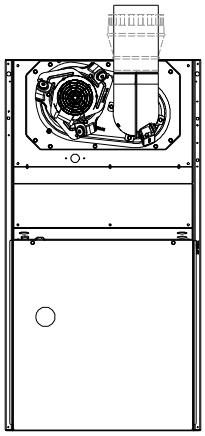

SEE NOTES: 1,2,4,7,8,9

UPFLOW

A02058

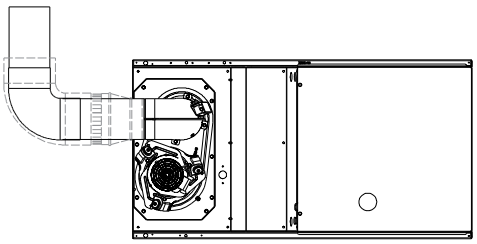

SEE NOTES: 1,2,4,7,8,9

HORIZONTAL LEFT

A02064

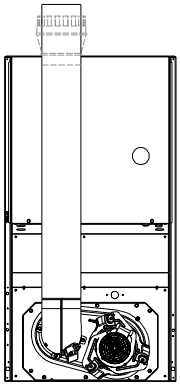

SEE NOTES: 1,2,4,5,7,8,9

DOWNFLOW

A02061

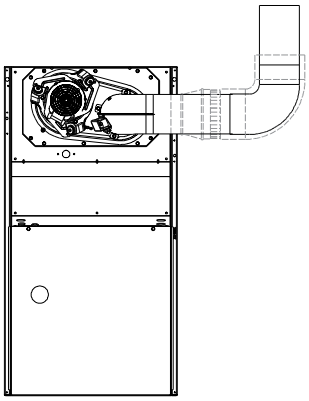

SEE NOTES: 1,2,3,4,7,8,9

UPFLOW

A02059

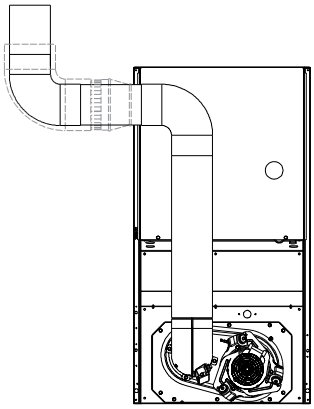

SEE NOTES:1,2,3,4,5,7,8,9

DOWNFLOW

A02060

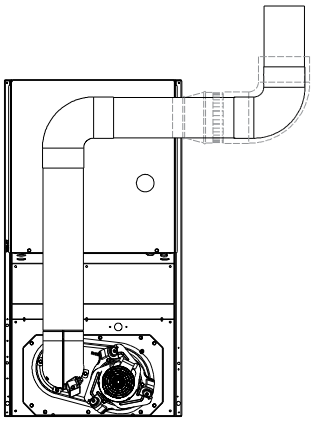

SEE NOTES: 1,2,3,4,7,8,9

DOWNFLOW

A02063

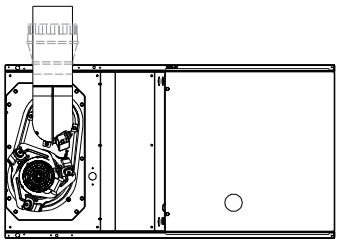

SEE NOTES: 1,2,4,5,7,8,9

HORIZONTAL LEFT

A02066

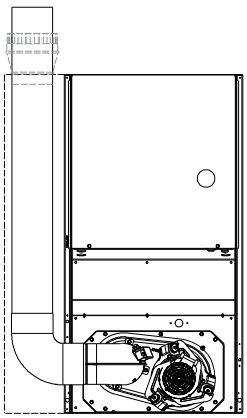

SEE NOTES: 1,2,4,5,6,7,8,9

DOWNFLOW

A02062

VENTING NOTES

1. For common vent, vent connector sizing and vent material: United States, latest edition of the National Fuel Gas Code (NFGC), ANSI Z223.1/NFPA 54.
2. Immediately increase to 5-in. (127 mm) vent connector outside furnace casing when 5-in. (127 mm) vent connector required, refer to Note 1.
3. Side outlet vent for upflow and downflow installations must use Type B vent immediately after exiting the furnace, except when Downflow Vent Guard is used in downflow position.
4. Type B vent where required, refer to Note 1.
5. 4-in. (102 mm) single wall vent must be used inside furnace casing and the Downflow Vent Guard Kit.
6. Accessory Downflow Vent Guard Kit required in downflow installations with bottom vent configuration.
7. Chimney Adapter Kit required for exterior masonry chimney applications. Refer to Chimney Adapter Kits for sizing and complete application details.
8. Secure vent connector to furnace elbow with (2) corrosion-resistant sheet metal screws, space approximately 180 apart.
9. Secure all other single wall vent connector joints with (3) corrosion-resistant screws spaced approximately 120 apart. Secure Type B vent connectors per vent connector manufacturer's recommendations.

ACCESSORIES

PART NUMBER	DESCRIPTION	0901716	0902120	1102120	1352422
ACG1625NCF*	External Filter Rack, 16 x 25”	X	-	-	-
ACG2025NCJ*	External Filter Rack, 20 x 25”	-	X	X	-
ACG2424NCL*	External Filter Rack, 24-1/2” x 24”*	-	-	-	X
325531-402*	Washable filter, 3/4” x 16” x 25”	X	-	-	-
325531-403*	Washable filter, 3/4” x 21” x 25”	-	X	X	-
325531-404*	Washable filter, 3/4” x 24” x 25”*	-	-	-	X
NAHB00101CA	Coil Adapter Kits - No Offset	X	X	X	X
NAHB00201CA	Coil Adapter Kits - Single Offset	X	X	X	X
NAHB00301CA	Coil Adapter Kits - Double Offset	X	X	X	X
NAHA00401DH	Chimney Adapter Kit, up to or equal to 110K BTUh	X	X	X	-
NAHA00301DH	Chimney Adapter Kit, greater than or equal to 135K BTUh	-	-	-	X
NAHA01101SB	Combustible Floor Base (Not required when evaporator coil case is used for downflow)	X	X	X	X
NAHB00301VC	Downflow Vent Guard (Not required when vent is routed through cabinet)	X	X	X	X
AGAGC8NPS01B*	Natural-to-Propane Conversion Kit †	X	X	X	X
AGAGC8PNS01B*	Propane-to-Natural Conversion Kit †	X	X	X	X
NAHA00201HL	High Altitude Kit	X	X	X	X
SYST0101CW	ION™ Communicating Control	X	X	X	X

*. Purchased through FAST Parts.
†. Factory authorized and field installed. Gas conversion kits are CSA recognized.
X Accessory

ORIFICES

Part Number	Gas Type	Orifice Size	Part Number	Gas Type	Orifice Size	Part Number	Gas Type	Orifice Size
1185612	Natural	42	1183809	Natural	46	1184256	Propane	54
1176928	Natural	43	1185613	Natural	47	1185615	Propane	55
1185574	Natural	44	1185614	Natural	48	1185616	Propane	56
1177213	Natural	45				1185617	Propane	1.25 mm
						1185618	Propane	1.30 mm

© 2023 Carrier. All rights reserved.

Manufacturer reserves the right to change, at any time, specifications and designs without notice and without obligations.