HEATING & COOLING PRODUCTS

N4A5

Performance Series

Product Specifications

EFFICIENT 14 SEER/11.7–12.2 EER AIR CONDITIONER

ENVIRONMENTALLY SOUND R–410A REFRIGERANT

1–1/2 THRU 5 TONS SPLIT SYSTEM

208/230 Volt, 1–phase, 60 Hz

208/230, 460 & 575 Volt, 3–phase, 60 Hz

REFRIGERATION CIRCUIT

- Scroll compressors on all models
- Filter–Drier supplied with every unit for field installation
- Copper tube / aluminum fin coil

EASY TO INSTALL AND SERVICE

- Easy Access service valves on all models
- External high and low refrigerant service ports
- Only two screws to access control panel
- Factory charged with R–410A refrigerant

BUILT TO LAST

- Baked–on powder coat finish over galvanized steel
- Post–painted (black) coil fins
- Coated, weather–resistant cabinet screws
- Coated inlet grille with 3/8” (10mm) grille spacing for extra protection (hail guard)

LIMITED WARRANTY*

- 10 year parts limited warranty (including compressor and coil) with timely registration
- 5 year parts limited warranty if not registered within 90 days of original installation

* For owner occupied, residential applications only. See warranty certificate for complete details and restrictions, including warranty coverage for other applications.

AHRI CERTIFIED™ www.ahridirectory.org

Use of the AHRI Certified TM Mark indicates a manufacturer’s participation in the program. For verification of certification for individual products, go to www.ahridirectory.org .

c UL US LISTED

Model Number	Size (tons)	Nominal BTU/hr	Min. Circuit Amps	Max. Fuse or Breaker	Operating Dimensions depth x width x height in. (mm)	Ship / Operating Weight lbs.(kg)
N4A518GKC	1–1/2	18,000	11.7	20	25–3/4 x 25–3/4 x 25 (654 x 654 x 635)	145/122 (66/55)
N4A524GKC	2	24,000	14.1	20	25–3/4 x 25–3/4 x 32–5/16 (654 x 654 x 821)	148/123 (67/56)
N4A530GKC	2–1/2	30,000	16.8	25	31–3/16 x 31–3/16 x 31–13/16 (792 x 792 x 808)	186/151 (84/69)
N4A536GKC	3	36,000	18.1	30	31–3/16 x 31–3/16 x 35–3/16 (792 x 792 x 894)	171/151(78/69)
N4A542GKC	3–1/2	42,000	22.3	35	31–3/16 x 31–3/16 x 28–7/16 (792 x 792 x 722)	226/191 (103/87)
N4A548GKC	4	48,000	20.9	35	31–3/16 x 31–3/16 x 28–7/16 (792 x 792 x 722)	200/182 (91/83)
N4A560GKC	5	60,000	27.5	40	31–3/16 x 31–3/16 x 31–13/16 (792 x 792 x 808)	218/197 (99/89)

Specifications subject to change without notice.

OUTDOOR UNIT MODEL NUMBER IDENTIFICATION GUIDE

Digit Position:	1	2	3	4	5, 6	7	8	9	10	11	12
Example Part Number:	**N**	**4**	**A**	**5**	**18**	**G**	**K**	**C**	**1**	**0**	**0**

BRANDING
- H = Heil Mainline
- N = Heil Entry

REFRIGERANT
- 4 = R–410A

TYPE
- A = Air Conditioner
- H = Heat Pump

NOMINAL EFFICIENCY
- 5 = 15 SEER

NOMINAL CAPACITY
- 18 = 18,000 BTUH = 1–1/2 tons
- 24 = 24,000 BTUH = 2 tons
- 30 = 30,000 BTUH = 2–1/2 tons
- 36 = 36,000 BTUH = 3 tons
- 42 = 42,000 BTUH = 3–1/2 tons
- 48 = 48,000 BTUH = 4 tons
- 60 = 60,000 BTUH = 5 tons

FEATURES
- A = Standard Grille
- G = Coil Guard Grille
- C = Coastal

VOLTAGE
- K = 208/230–1–60
- H = 208/230–3–60
- L = 460–3–60
- S = 575–3–60

Sales Code

Engineering Revision

Extra Digit

Extra Digit

ACCESSORIES PART NUMBER IDENTIFICATION GUIDE

Digit Position:	1	2	3	4	5	6, 7	8, 9	10, 11
Example Part Number:	**N**	**A**	**S**	**A**	**0**	**0 1**	**01**	**C H**

BRANDING
- N = Non–Branded

PRODUCT GROUP
- A = Accessory

KIT USAGE
- S = Split System (AC & HP)

MAJOR SERIES
- A = Original
- B = 2nd Generation

REFRIGERANT
- 0 = Generic or Not Applicable
- 2 = R–22
- 4 = R–410A

Product Identifier Number

Package Quantity

Type of Kit (Example: CH = Crankcase Heater)

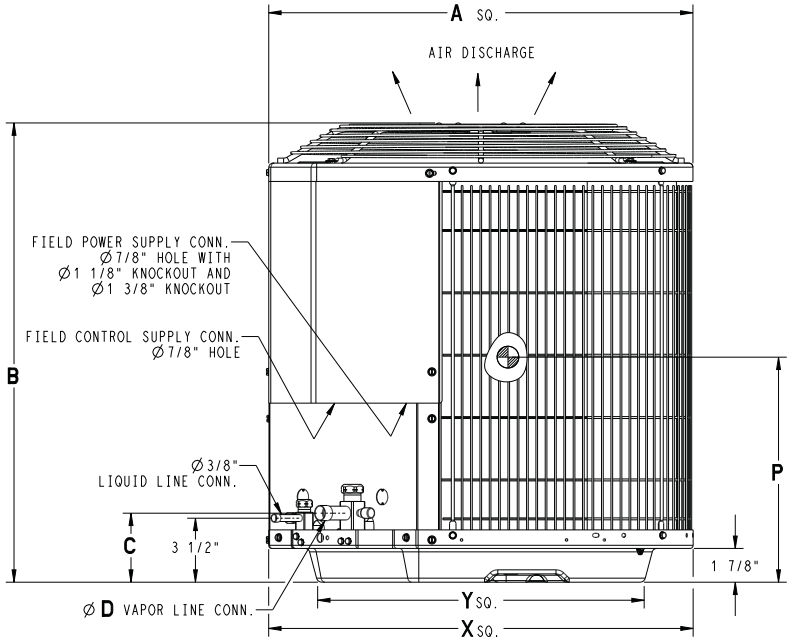

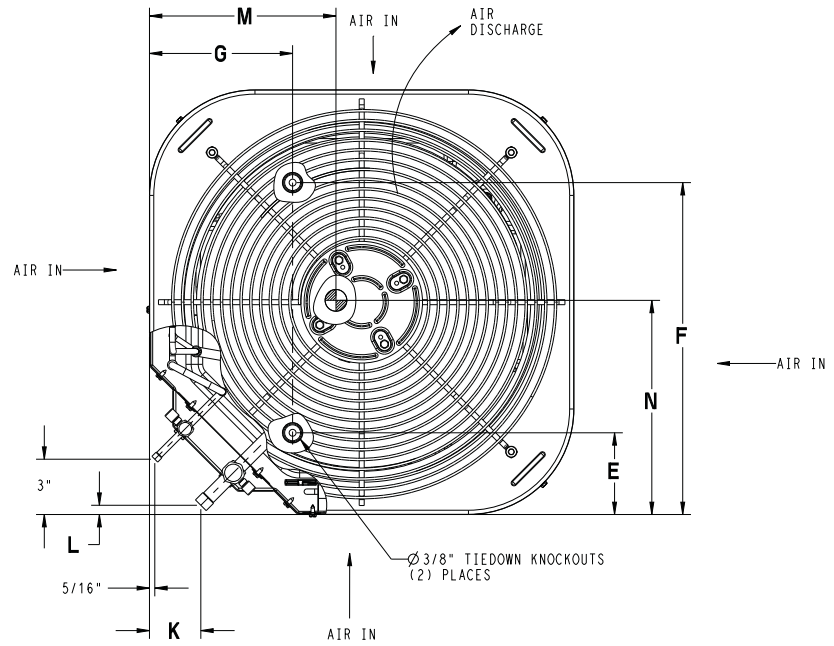

SD5270–4 REV B

1. Allow 30” clearance to service side of unit, 48” above unit, 6“ on one side, 12” on remaining sides and 24” between units for proper airflow.
2. Minimum outdoor operating ambient in cooling mode is 55ºF, max 125ºF.
3. Center of Gravity

Model	Dimensions Inches (English)														
	A	B	C	D	E	F	G	K	L	M	N	P	Minimum Ground Mounting Pad Size X	Minimum Rooftop Mounting Pad Size Y	Shipping Dimensions L x W x H
N4A518GKC	25–3/4	25	3–3/4	3/4	4–7/16	21–1/4	9–1/8	2–13/16	1/2	13	15–1/4	9–3/4	25–3/4 x 25–3/4	20–7/16 x 20–7/16	27–7/8 x 27–7/8 x 32–9/16
N4A524GKC	25–3/4	32–5/16	3–3/4	3/4	4–7/16	21–1/4	9–1/8	2–13/16	1/2	13–5/8	13–1/4	15–1/16	25–3/4 x 25–3/4	20–7/16 x 20–7/16	27–7/8 x 27–7/8 x 36–5/8
N4A530GKC	31–3/16	31–13/16	3–3/4	3/4	6–9/16	24–11/16	9–1/8	2–13/16	1/2	16–1/8	15–1/16	12–5/8	31–3/16 x 31–3/16	23 x 23	33–3/8 x 33–3/8 x 34
N4A536GKC	31–3/16	35–3/16	3–7/8	7/8	6–9/16	24–11/16	9–1/8	2–15/16	5/8	16–1/8	16–3/8	14–7/16	31–3/16 x 31–3/16	23 x 23	33–3/8 x 33–3/8 x 37–7/16
N4A542GKC	31–3/16	28–7/16	3–7/8	7/8	6–9/16	24–11/16	9–1/8	2–15/16	5/8	15–7/8	17	11–7/8	31–3/16 x 31–3/16	23 x 23	33–3/8 x 33–3/8 x 30–5/8
N4A548GKC	31–3/16	28–7/16	3–7/8	7/8	6–9/16	24–11/16	9–1/8	2–15/16	5/8	16–3/16	16–1/4	10–1/4	31–3/16 x 31–3/16	23 x 23	33–3/8 x 33–3/8 x 30–5/8
N4A560GKC	31–3/16	31–13/16	3–7/8	7/8	6–9/16	24–11/16	9–1/8	2–15/16	5/8	15–1/2	16	10–7/8	31–3/16 x 31–3/16	23 x 23	33–3/8 x 33–3/8 x 34

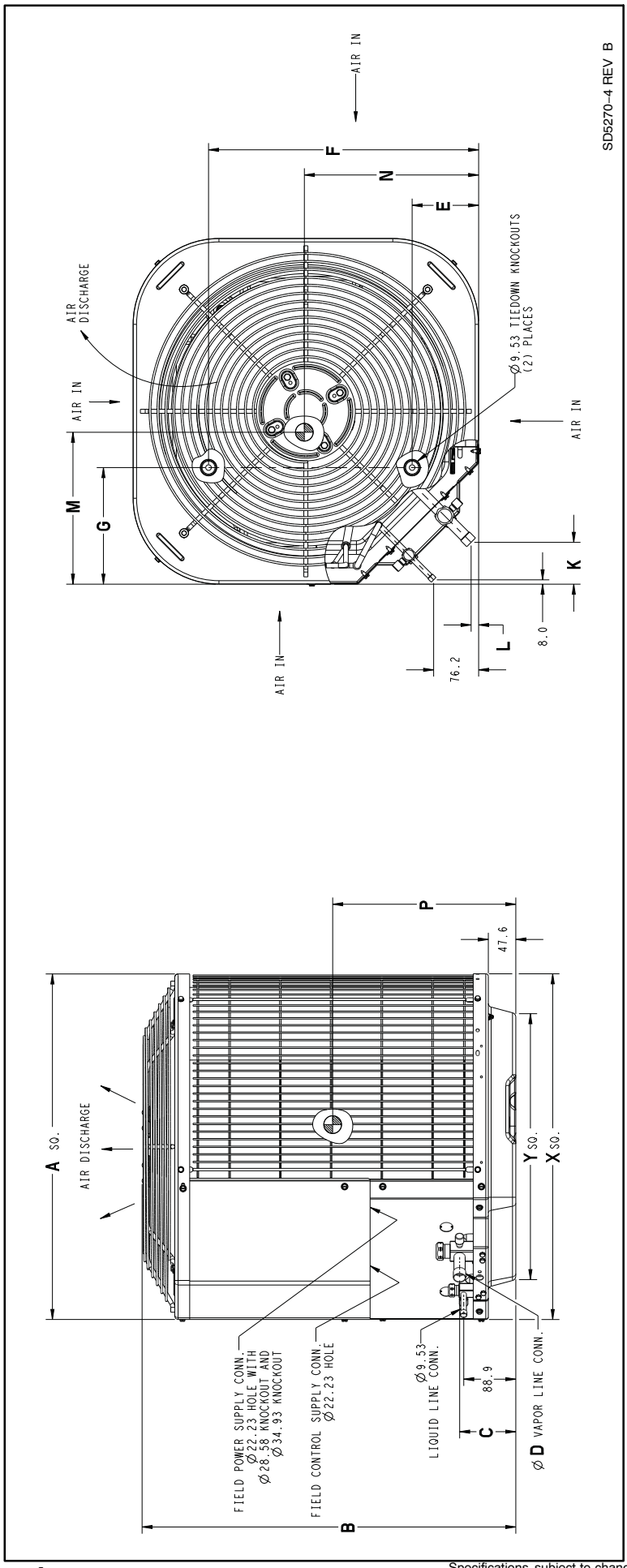

1. Allow 762 mm clearance to service side of unit, 1219 mm above unit, 152 mm on one side, 305 mm on remaining sides, and 610mm between units for proper airflow.
2. Minimum outdoor operating ambient in cooling mode is 13ºC, max 52ºC.
3. Center of Gravity

Model	Dimensions mm (SI Metric)															Shipping Dimensions L x W x H
	A	B	C	D	E	F	G	K	L	M	N	P	Minimum Ground Mounting Pad Size X	Minimum Rooftop Mounting Pad Size Y		
N4A518GKC	654	635	95	19	113	540	232	71	13	330	387	248	654 X 654	518 x 518		708 x 708 x 827
N4A524GKC	654	821	95	19	113	540	232	71	13	340	337	383	654 x 654	518 x 518		708 x 708 x 827
N4A530GKC	792	808	95	19	167	627	232	71	13	410	383	321	792 x 792	583 x 583		847 x 847 x 864
N4A536GKC	792	894	98	22	167	627	232	75	16	410	416	367	792 x 792	583 x 583		847 x 847 x 951
N4A542GKC	792	722	98	22	167	627	232	75	16	403	432	302	792 x 792	583 x 583		847 x 847 x 778
N4A548GKC	792	722	98	22	167	627	232	75	16	411	413	260	792 x 792	583 x 583		847 x 847 x 778
N4A560GKC	792	808	98	22	167	627	232	75	16	394	406	276	792 x 792	583 x 583		847 x 847 x 864

PHYSICAL DATA

UNIT SIZE	18	24	30	36	42	48	60
Compressor Type	Scroll						
REFRIGERANT	R−410A						
Control	TXV Hard Shutoff						
Charge (lb)	3.20 (1.45)	4.60 (2.09)	5.67 (2.57)	6.40 (2.90)	7.46 (3.38)	8.31 (3.77)	9.39 (4.26)
COND FAN	Propeller Type, Direct Drive						
Air Discharge	Vertical						
Air Qty (CFM)	1700	1881	2614	3365	3700	3545	3700
Motor HP	1/12	1/12	1/10	1/5	1/4	1/4	1/4
Motor RPM	1100	1100	1100	1100	1100	1110	1100
COND COIL							
Face Area (Sq ft)	9.85	11.2	17.24	19.4	15.1	15.1	17.25
Fins per In.	25	25	25	25	20	20	25
Rows	1	1	1	1	2	2	2
Circuits	3	5	4	5	6	6	8
VALVE CONNECT. (In. ID)							
Vapor	3/4	3/4	3/4	7/8	7/8	7/8	7/8
Liquid	3/8						
REFRIGERANT TUBES (In. OD)							
Rated Vapor*	3/4	3/4	3/4	7/8	7/8	7/8	1−1/8
Max Liquid Line	3/8						

* Units are rated with 25 ft (7.6 m) of lineset length. See Vapor Line Sizing and Cooling Capacity Loss table when using other sizes and lengths of lineset. **Note**: See unit Installation Instruction for proper installation.

UNIT SIZE	V/PH	OPER VOLTS*		COMPR		FAN	MCA	MAX FUSE† or CKT BRK AMPS
		MAX	MIN	LRA	RLA	FLA		
18	208/230/1−60	253	197	47.5	9.0	0.40	11.7	20
24				62.9	10.9	0.50	14.1	20
30				67.8	12.8	0.75	16.8	25
36				79.0	13.6	1.10	18.1	30
42				109.0	16.7	1.40	22.3	35
48				105.7	15.6	1.40	20.9	35
60				127.1	20.8	1.52	27.5	40

* Permissible limits of the voltage range at which the unit will operate satisfactorily

† Time−Delay fuse.

FLA – Full Load Amps
LRA – Locked Rotor Amps
MCA – Minimum Circuit Amps
RLA – Rated Load Amps
NOTE: Control circuit is 24V on all units and requires external power source. Copper wire must be used from service disconnect to unit. All motors/compressors contain internal overload protection.

Complies with 2010 requirements of ASHRAE Standards 90.1

A–WEIGHTED SOUND POWER (dBA)

UNIT SIZE	Standard Rating (dBA)	TYPICAL OCTAVE BAND SPECTRUM (dBA without tone adjustment)						
		125	250	500	1000	2000	4000	8000
18	75	46.0	55.0	59.5	64.0	60.5	54.5	48.5
24	71	50.5	53.5	58.5	60.5	60.0	56.5	52.5
30	73	49.5	56.0	62.5	64.0	60.5	57.5	53.5
36	75	49.0	57.0	62.5	66.0	61.0	58.5	52.0
42	75	52.5	63.0	64.0	63.0	62.0	58.0	52.0
48	76	53.0	61.0	64.0	65.5	62.0	59.5	50.5
60	75	53.5	57.0	62.5	63.5	61.5	57.5	51.0

NOTE: Tested in compliance with AHRI 270–1995 (not listed with AHRI)

A–WEIGHTED SOUND POWER (dBA) WITH SOUND SHIELD

UNIT SIZE	Standard Rating (dBA)	TYPICAL OCTAVE BAND SPECTRUM (dBA without tone adjustment)						
		125	250	500	1000	2000	4000	8000
18	75	46.5	55.5	59.5	63.5	60.0	54.0	47.0
24	71	47.5	53.5	58.0	59.5	60.0	55.5	49.0
30	72	49.0	56.5	61.5	62.5	60.0	57.0	52.0
36	73	49.5	57.0	62.0	64.0	60.0	58.0	51.0
42	74	53.5	64.0	64.0	62.5	61.0	56.5	50.5
48	73	54.5	61.0	63.5	62.5	60.0	56.5	47.5
60	73	53.5	59.0	63.0	62.5	59.5	56.0	48.0

NOTE: Tested in compliance with AHRI 270–1995 (not listed with AHRI)

METERING DEVICE

UNIT SIZE – SERIES	INDOOOR	REQUIRED SUBCOOLING °F (°C)
18	TXV*	13 (7.22)
24		10 (5.56)
30		12 (6.67)
36		11 (6.11)
42		11 (6.11)
48		11 (6.11)
60		13 (7.22)

* TXV must be ordered separately when indoor coil is not equipped with a TXV. TXV must be hard–shutoff type.

REFRIGERANT CHARGE ADJUSTMENTS

Liquid Line Size	R–410A Charge oz/ft
3/8	0.60 (Factory charge for lineset = 9 oz)
5/16	0.40
1/4	0.27

Units are factory charged for 15 ft (4.6 m) of 3/8” liquid line. The factory charge for 3/8” lineset 9 oz. When using other length or diameter liquid lines, charge adjustments are required per the chart above.

Charging Formula:

[(Lineset oz/ft x total length) – (factory charge for lineset)] = charge adjustment

Example 1: System has 15 ft of line set using existing 1/4“ liquid line. What charge adjustment is required?

Formula: (.27 oz/ft x 15ft) – (9 oz) = (-4.95) oz.

Net result is to remove 4.95 oz of refrigerant from the system

Example 2: System has 45 ft of existing 5/16” liquid line. What is the charge adjustment?

Formula: (.40 oz/ft. x 45ft) – (9 oz.) = 9 oz.

Net result is to add 9 oz of refrigerant to the system

LONG LINE APPLICATIONS

An application is considered Long Line, when the refrigerant level in the system requires the use of accessories to maintain acceptable refrigerant management for systems reliability. See Accessory Usage Guideline table for required accessories. Defining a system as long line depends on the liquid line diameter, actual length of the tubing, and vertical separation between the indoor and outdoor units.

For Air Conditioner systems, the charts below shows when an application requires a TXV and long line accessories due to lineset length.

AC with R–410A Refrigerant Long Line Description ft (m) Beyond these lengths, a TXV is required

Total Length	Outdoor Unit Above or Below Indoor Unit
TXV required beyond 50 ft. (15.2 m)	TXV required beyond 20 ft. (6.1 m)

AC with R–410A Refrigerant Long Line Description ft (m) (Beyond these lengths, long line accessories are required)

Liquid Line Size	Units On Same Level	Outdoor Below Indoor	Outdoor Above Indoor
1/4 + TXV	No accessories needed within allowed lengths	No accessories needed within allowed lengths	175 (53.3)
5/16 + TXV	120 (36.6)	50 (15.2) vertical or 120 (36.6) total	120 (36.6)
3/8 + TXV	80 (24.4)	35 (10.7) vertical or 80 (24.4) total	80 (24.4)

Note: See Long Line Guideline for details

VAPOR LINE SIZING AND COOLING CAPACITY LOSS

Acceptable vapor line diameters provide adequate oil return to the compressor while avoiding excessive capacity loss. The suction line diameters shown in the chart below are acceptable for AC systems with R−410A refrigerant:

Unit Nominal Size (Btuh)	Maximum Liquid Line Diameters (In. OD)	Vapor Line Diameters (In. OD)	Cooling Capacity Loss (%) Total Equivalent Line Length ft. (m)								
			26−50 (7.9−15.2)	51−80 (15.5−24.4)	81−100 (24.7−30.5)	101−125 (30.8−38.1)	126−150 (38.4−45.7)	151−175 (46.0−53.3)	176−200 (53.6−61.0)	201−225 (61.3−68.6)	226−250 (68.9−76.2)
18 1 Stage AC with R−410A	3/8	1/2	1	2	3	5	6	7	8	9	11
		5/8	0	1	1	1	2	2	2	3	3
		3/4	0	0	0	0	1	1	1	1	1
24 1 Stage AC with R−410A	3/8	5/8	0	1	2	2	3	3	4	5	5
		3/4	0	0	1	1	1	1	1	2	2
		7/8	0	0	0	0	0	1	1	1	1
30 1 Stage AC with R−410A	3/8	5/8	1	2	3	3	4	5	6	7	8
		3/4	0	0	1	1	1	2	2	2	3
		7/8	0	0	0	0	1	1	1	1	1
36 1 Stage AC with R−410A	3/8	5/8	1	2	4	5	6	8	9	10	12
		3/4	0	1	1	2	2	3	3	4	4
		7/8	0	0	0	1	1	1	1	2	2
42 1 Stage AC with R−410A	3/8	3/4	0	1	2	2	3	4	4	5	6
		7/8	0	0	1	1	1	2	2	2	3
		1 1/8	0	0	0	0	0	0	0	0	0
48 1 Stage AC with R−410A	3/8	3/4	0	1	2	3	4	5	5	6	7
		7/8	0	0	1	1	2	2	2	3	3
		1 1/8	0	0	0	0	0	0	0	1	1
60 1 Stage AC with R−410A	3/8	3/4	1	2	4	5	6	7	9	10	11
		7/8	0	1	2	2	3	4	4	5	5
		1 1/8	0	0	0	1	1	1	1	1	1

Consult the Long Line Application Guideline document before purchasing/installing line sets.

Applications in shaded area may have height restrictions that limit allowable total equivalent length when outdoor unit is below indoor unit.

TESTED AHRI COMBINATION RATINGS

NOTE: For complete ratings information, use the AHRI website directory search: www.AHRIdirectory.org.
New ratings may be listed online before Specification Sheets are updated.

UNIT SIZE	INDOOR MODEL	AHRI STANDARD RATINGS COOLING						FURNACE MODEL
		CAPACITY	FACTORY ENHANCE	SEER STANDARD	SEER TDR	SEER TXV	EER	
18	EA**1917AL*	17,200	TXV		14.00		12.20	
24	EA**2517AL*	24,000	TXV		14.50		12.50	
30	EA**3721AL*	29,600	TXV		14.50		12.50	
36	EA**3721AL*	34,600	TXV		14.00		12.20	
42	EA**4321AL*	40,000	TXV		14.00		12.20	
48	EA**6124AL*	45,000	TXV		14.50		11.70	
60	EA**6024AL*	56,500	TXV		14.00		11.70	

AHRI — Air Conditioning, Heating & Refrigeration Institute
EER — Energy Efficiency Ratio − 80°F (26.6°C) indoor db/67°F (19.4°C) indoor wb & 95°F (35°C) outdoor wb.
SEER — Seasonal Energy Efficiency Ratio
TDR — Time−Delay Relay. In most cases, only one method should be used to achieve TDR function. Using more than one method in a system may cause degradation in performance. Use either the accessory Time−Delay Relay or a furnace equipped with TDR. Most ICP furnaces are equipped with TDR.

NOTES:
1. Ratings are net values reflecting the effects of circulating fan motor heat. Supplemental electric heat is not included.
2. Tested outdoor/indoor combinations have been tested in accordance with DOE test procedures for central air conditioners. Ratings for other combinations are determined under DOE computer simulation procedures.
3. Determine actual CFM values obtainable for your system by referring to fan performance data in fan coil or furnace coil literature.
4. Do not apply with capillary tube coils as performance and reliability are significantly affected.

TESTED AHRI COMBINATION RATINGS*

NOTE: Ratings contained in this document are subject to change at any time.

For AHRI ratings certificates, please refer to the AHRI directory. **www.ahridirectory.org**

Additional ratings and system combinations can be accessed via the Heil database:
http://www.icpeqp.com/AHRIratings/ratings.aspx?Brand=Heil

Or scan this QR code:

DETAILED COOLING CAPACITIES#

EVAPORATOR AIR		CONDENSER ENTERING AIR TEMPERATURES °F (°C)																	
		75 (23.9)			85 (29.4)			95 (35)			105 (40.6)			115 (46.1)			125 (51.7)		
CFM	EWB °F (°C)	Capacity MBtuh		Total System KW**	Capacity MBtuh		Total System KW**	Capacity MBtuh		Total System KW**	Capacity MBtuh		Total System KW**	Capacity MBtuh		Total System KW**	Capacity MBtuh		Total System KW**
		Total	Sens‡		Total	Sens‡		Total	Sens‡		Total	Sens‡		Total	Sens‡		Total	Sens‡	
N4A518GKA Outdoor Section With EA*4X24B Indoor Section**																			
525	72 (22.2)	20.56	10.96	1.11	19.77	10.67	1.25	18.93	10.35	1.40	17.98	10.00	1.58	16.91	9.62	1.77	15.70	9.18	2.00
	67 (19.4)	18.80	13.55	1.12	18.03	13.23	1.26	17.20	12.89	1.41	16.29	12.52	1.58	15.26	12.11	1.78	14.11	11.66	2.00
	63 (17.2)††	17.52	13.07	1.13	16.75	12.73	1.27	15.94	12.37	1.42	15.04	11.98	1.59	14.05	11.55	1.78	12.94	11.08	2.01
	62 (16.7)	17.21	16.10	1.13	16.46	15.76	1.27	15.67	15.40	1.42	14.89	14.89	1.59	14.11	14.11	1.78	13.23	13.23	2.00
	57 (13.9)	16.82	16.82	1.14	16.21	16.21	1.27	15.57	15.57	1.42	14.86	14.86	1.59	14.08	14.08	1.78	13.20	13.20	2.00
600	72 (22.2)	20.91	11.56	1.14	20.10	11.27	1.27	19.23	10.95	1.43	18.25	10.60	1.60	17.16	10.22	1.80	15.91	9.78	2.02
	67 (19.4)	19.14	14.52	1.15	18.35	14.21	1.28	17.50	13.87	1.44	16.56	13.49	1.61	15.51	13.08	1.80	14.33	12.62	2.03
	63 (17.2)††	17.86	13.98	1.16	17.08	13.64	1.29	16.24	13.28	1.44	15.32	12.88	1.61	14.30	12.45	1.81	13.16	11.97	2.03
	62 (16.7)	17.61	17.44	1.16	16.94	16.94	1.29	16.27	16.27	1.44	15.53	15.53	1.61	14.70	14.70	1.81	13.77	13.77	2.03
	57 (13.9)	17.54	17.54	1.16	16.91	16.91	1.29	16.24	16.24	1.44	15.50	15.50	1.61	14.68	14.68	1.81	13.75	13.75	2.03
675	72 (22.2)	21.16	12.15	1.16	20.33	11.86	1.30	19.44	11.54	1.46	18.44	11.19	1.63	17.32	10.80	1.83	16.05	10.37	2.05
	67 (19.4)	19.39	15.48	1.17	18.58	15.16	1.31	17.72	14.81	1.46	16.77	14.44	1.63	15.69	14.03	1.83	14.49	13.56	2.05
	63 (17.2)††	18.12	14.87	1.18	17.31	14.52	1.32	16.46	14.16	1.47	15.53	13.77	1.64	14.49	13.33	1.84	13.33	12.84	2.06
	62 (16.7)	18.17	18.17	1.18	17.52	17.52	1.32	16.82	16.82	1.47	16.05	16.05	1.64	15.19	15.19	1.83	14.22	14.22	2.06
	57 (13.9)	18.14	18.14	1.18	17.49	17.49	1.32	16.79	16.79	1.47	16.03	16.03	1.64	15.17	15.17	1.83	14.20	14.20	2.06

EVAPORATOR AIR		CONDENSER ENTERING AIR TEMPERATURES °F (°C)																	
		75 (23.9)			85 (29.4)			95 (35)			105 (40.6)			115 (46.1)			125 (51.7)		
CFM	EWB °F (°C)	Capacity MBtuh		Total System KW**	Capacity MBtuh		Total System KW**	Capacity MBtuh		Total System KW**	Capacity MBtuh		Total System KW**	Capacity MBtuh		Total System KW**	Capacity MBtuh		Total System KW**
		Total	Sens‡		Total	Sens‡		Total	Sens‡		Total	Sens‡		Total	Sens‡		Total	Sens‡	
N4A524GKA Outdoor Section With EA*4X25L17 Indoor Section**																			
700	72 (22.2)	28.74	15.34	1.56	27.56	14.90	1.73	26.33	14.44	1.92	25.00	13.95	2.14	23.56	13.43	2.40	21.93	12.85	2.70
	67 (19.4)	26.25	18.97	1.56	25.16	18.51	1.73	24.00	18.04	1.92	22.78	17.53	2.14	21.42	16.99	2.40	19.90	16.39	2.70
	63 (17.2)††	24.47	18.29	1.56	23.43	17.84	1.73	22.35	17.34	1.92	21.19	16.83	2.14	19.88	16.27	2.40	18.47	15.67	2.71
	62 (16.7)	23.96	22.48	1.56	22.96	22.01	1.73	21.90	21.51	1.92	20.82	20.82	2.14	19.79	19.79	2.40	18.66	18.66	2.70
	57 (13.9)	23.35	23.35	1.56	22.55	22.55	1.73	21.70	21.70	1.92	20.79	20.79	2.14	19.76	19.76	2.40	18.63	18.63	2.70
800	72 (22.2)	29.22	16.18	1.60	28.00	15.74	1.77	26.71	15.27	1.96	25.33	14.78	2.18	23.85	14.26	2.44	22.16	13.67	2.73
	67 (19.4)	26.70	20.31	1.60	25.57	19.85	1.77	24.37	19.37	1.96	23.09	18.86	2.18	21.71	18.31	2.44	20.15	17.70	2.74
	63 (17.2)††	24.93	19.55	1.60	23.86	19.08	1.77	22.73	18.59	1.96	21.52	18.07	2.18	20.17	17.49	2.44	18.72	16.88	2.74
	62 (16.7)	24.49	24.27	1.60	23.54	23.54	1.77	22.63	22.63	1.96	21.65	21.65	2.18	20.56	20.56	2.44	19.34	19.34	2.74
	57 (13.9)	24.36	24.36	1.60	23.50	23.50	1.77	22.60	22.60	1.96	21.62	21.62	2.18	20.53	20.53	2.44	19.32	19.32	2.74
900	72 (22.2)	29.57	17.01	1.63	28.30	16.56	1.80	26.98	16.09	2.00	25.56	15.60	2.22	24.03	15.06	2.47	22.31	14.47	2.77
	67 (19.4)	27.04	21.62	1.63	25.87	21.16	1.80	24.63	20.66	1.99	23.32	20.15	2.22	21.91	19.59	2.47	20.32	18.96	2.77
	63 (17.2)††	25.27	20.77	1.63	24.17	20.29	1.80	23.00	19.80	2.00	21.76	19.27	2.22	20.38	18.68	2.48	18.89	18.04	2.78
	62 (16.7)	25.23	25.23	1.63	24.32	24.32	1.80	23.36	23.36	2.00	22.32	22.32	2.22	21.19	21.19	2.47	19.90	19.90	2.77
	57 (13.9)	25.19	25.19	1.63	24.28	24.28	1.80	23.33	23.33	2.00	22.30	22.30	2.22	21.16	21.16	2.47	19.87	19.87	2.77

See notes on page 7

DETAILED COOLING CAPACITIES# CONTINUED

EVAPORATOR AIR		CONDENSER ENTERING AIR TEMPERATURES °F (°C)																	
		75 (23.9)			85 (29.4)			95 (35)			105 (40.6)			115 (46.1)			125 (51.7)		
CFM	EWB °F (°C)	Capacity MBtuh		Total System KW**	Capacity MBtuh		Total System KW**	Capacity MBtuh		Total System KW**	Capacity MBtuh		Total System KW**	Capacity MBtuh		Total System KW**	Capacity MBtuh		Total System KW**
		Total	Sens‡		Total	Sens‡		Total	Sens‡		Total	Sens‡		Total	Sens‡		Total	Sens‡	
N4A530GKA Outdoor Section With EA*4X37L21 Indoor Section**																			
875	72 (22.2)	34.17	17.94	1.96	32.63	17.38	2.16	31.02	16.79	2.40	29.33	16.18	2.66	27.51	15.54	2.98	25.57	14.86	3.35
	67 (19.4)	31.02	22.10	1.97	29.61	21.53	2.17	28.14	20.94	2.40	26.58	20.31	2.66	24.91	19.66	2.98	23.13	18.96	3.35
	63 (17.2)††	28.77	21.25	1.97	27.46	20.67	2.17	26.08	20.08	2.40	24.62	19.45	2.67	23.07	18.79	2.98	21.39	18.09	3.35
	62 (16.7)	28.19	26.15	1.97	26.92	25.56	2.17	25.60	25.36	2.40	24.34	24.34	2.66	23.11	23.11	2.98	21.76	21.76	3.35
	57 (13.9)	27.51	27.51	1.97	26.51	26.51	2.17	25.45	25.45	2.40	24.30	24.30	2.66	23.07	23.07	2.98	21.73	21.73	3.35
1000	72 (22.2)	34.79	18.95	2.01	33.19	18.37	2.21	31.51	17.78	2.44	29.73	17.16	2.71	27.85	16.51	3.03	25.85	15.82	3.40
	67 (19.4)	31.61	23.69	2.01	30.13	23.11	2.21	28.60	22.50	2.44	26.98	21.87	2.71	25.25	21.19	3.03	23.42	20.49	3.40
	63 (17.2)††	29.34	22.73	2.02	27.97	22.14	2.22	26.53	21.53	2.45	25.01	20.89	2.71	23.40	20.21	3.03	21.68	19.49	3.40
	62 (16.7)	28.87	28.71	2.01	27.71	27.71	2.22	26.56	26.56	2.45	25.33	25.33	2.71	24.00	24.00	3.03	22.57	22.57	3.40
	57 (13.9)	28.75	28.75	2.01	27.66	27.66	2.22	26.52	26.52	2.45	25.29	25.29	2.71	23.97	23.97	3.03	22.54	22.54	3.40
1125	72 (22.2)	35.24	19.93	2.06	33.57	19.35	2.26	31.84	18.74	2.49	30.02	18.11	2.76	28.08	17.45	3.08	26.02	16.75	3.45
	67 (19.4)	32.05	25.24	2.06	30.53	24.64	2.26	28.94	24.02	2.49	27.27	23.37	2.76	25.51	22.69	3.08	23.63	21.95	3.45
	63 (17.2)††	29.77	24.16	2.06	28.34	23.56	2.26	26.86	22.94	2.49	25.30	22.28	2.76	23.65	21.59	3.08	21.90	20.83	3.45
	62 (16.7)	29.83	29.83	2.06	28.67	28.67	2.26	27.45	27.45	2.49	26.15	26.15	2.76	24.74	24.74	3.07	23.23	23.23	3.45
	57 (13.9)	29.79	29.79	2.06	28.63	28.63	2.26	27.41	27.41	2.49	26.11	26.11	2.76	24.71	24.71	3.07	23.20	23.20	3.45

EVAPORATOR AIR		CONDENSER ENTERING AIR TEMPERATURES °F (°C)																	
		75 (23.9)			85 (29.4)			95 (35)			105 (40.6)			115 (46.1)			125 (51.7)		
CFM	EWB °F (°C)	Capacity MBtuh		Total System KW**	Capacity MBtuh		Total System KW**	Capacity MBtuh		Total System KW**	Capacity MBtuh		Total System KW**	Capacity MBtuh		Total System KW**	Capacity MBtuh		Total System KW**
		Total	Sens‡		Total	Sens‡		Total	Sens‡		Total	Sens‡		Total	Sens‡		Total	Sens‡	
N4A536GKA Outdoor Section With EA*4X37L21 Indoor Section**																			
1050	72 (22.2)	41.37	21.28	2.29	39.61	20.66	2.57	37.34	19.87	2.85	34.80	19.01	3.15	32.22	18.13	3.51	29.74	17.32	3.96
	67 (19.4)	38.24	26.63	2.29	36.68	26.02	2.57	34.60	25.21	2.84	32.26	24.32	3.13	29.89	23.42	3.49	27.60	22.56	3.93
	63 (17.2)††	35.82	25.73	2.30	34.41	25.13	2.57	32.47	24.32	2.84	30.30	23.42	3.12	28.06	22.51	3.48	25.93	21.65	3.92
	62 (16.7)	35.20	31.75	2.31	33.85	31.13	2.57	32.01	31.87	2.83	30.18	30.18	3.12	28.33	28.33	3.48	26.52	26.52	3.92
	57 (13.9)	34.54	34.54	2.31	33.43	33.43	2.58	31.90	31.90	2.83	30.14	30.14	3.12	28.29	28.29	3.48	26.48	26.48	3.92
1200	72 (22.2)	41.83	22.41	2.34	39.99	21.78	2.63	37.64	20.98	2.91	35.04	20.11	3.22	32.39	19.23	3.58	29.84	18.39	4.02
	67 (19.4)	38.76	28.48	2.35	37.13	27.85	2.62	34.98	27.03	2.90	32.57	26.13	3.19	30.13	25.21	3.55	27.79	24.32	3.99
	63 (17.2)††	36.39	27.47	2.36	34.91	26.85	2.63	32.90	26.03	2.89	30.64	25.11	3.18	28.35	24.18	3.54	26.16	23.28	3.98
	62 (16.7)	35.97	35.97	2.36	34.75	34.75	2.63	33.08	33.08	2.89	31.17	31.17	3.18	29.19	29.19	3.54	27.24	27.24	3.99
	57 (13.9)	35.91	35.91	2.36	34.70	34.70	2.63	33.04	33.04	2.89	31.13	31.13	3.18	29.16	29.16	3.54	27.22	27.22	3.99
1350	72 (22.2)	42.12	23.50	2.40	40.23	22.86	2.69	37.82	22.05	2.97	35.16	21.18	3.28	32.45	20.29	3.64	29.86	19.44	4.09
	67 (19.4)	39.13	30.28	2.40	37.44	29.64	2.68	35.23	28.80	2.96	32.78	27.87	3.25	30.31	26.93	3.61	27.93	25.97	4.06
	63 (17.2)††	36.81	29.15	2.41	35.26	28.52	2.69	33.20	27.67	2.95	30.89	26.73	3.24	28.56	25.77	3.60	26.36	26.11	4.04
	62 (16.7)	37.06	37.06	2.41	35.74	35.74	2.68	33.96	33.96	2.95	31.94	31.94	3.25	29.84	29.84	3.61	27.79	27.79	4.05
	57 (13.9)	37.01	37.01	2.41	35.70	35.70	2.68	33.92	33.92	2.95	31.90	31.90	3.25	29.81	29.81	3.61	27.76	27.76	4.05

See notes on page 7

DETAILED COOLING CAPACITIES# CONTINUED

EVAPORATOR AIR		CONDENSER ENTERING AIR TEMPERATURES °F (°C)																	
		75 (23.9)			85 (29.4)			95 (35)			105 (40.6)			115 (46.1)			125 (51.7)		
CFM	EWB °F (°C)	Capacity MBtuh		Total System KW**	Capacity MBtuh		Total System KW**	Capacity MBtuh		Total System KW**	Capacity MBtuh		Total System KW**	Capacity MBtuh		Total System KW**	Capacity MBtuh		Total System KW**
		Total	Sens‡		Total	Sens‡		Total	Sens‡		Total	Sens‡		Total	Sens‡		Total	Sens‡	
N4A542GKA Outdoor Section With EA*4X43L21 Indoor Section**																			
1200	72 (22.2)	48.28	25.79	2.74	46.16	24.99	3.00	43.98	24.17	3.29	41.66	23.31	3.63	39.16	22.40	4.04	36.41	21.40	4.50
	67 (19.4)	43.89	31.69	2.73	41.97	30.88	2.98	40.00	30.07	3.28	37.90	29.20	3.62	35.60	28.27	4.02	33.08	27.26	4.49
	63 (17.2)††	40.73	30.48	2.72	38.96	29.68	2.98	37.13	28.87	3.27	35.18	28.01	3.61	33.05	27.08	4.01	30.68	26.05	4.48
	62 (16.7)	39.99	37.46	2.72	38.27	36.64	2.97	36.52	35.78	3.27	34.69	34.69	3.61	32.98	32.98	4.01	31.05	31.05	4.48
	57 (13.9)	38.93	38.93	2.71	37.58	37.58	2.97	36.15	36.15	3.27	34.63	34.63	3.61	32.93	32.93	4.01	31.01	31.01	4.48
1400	72 (22.2)	49.27	27.40	2.83	47.02	26.58	3.08	44.73	25.75	3.37	42.31	24.87	3.71	39.69	23.94	4.11	36.83	22.93	4.58
	67 (19.4)	44.84	34.26	2.81	42.81	33.44	3.06	40.73	32.59	3.36	38.54	31.71	3.70	36.15	30.76	4.10	33.53	29.71	4.57
	63 (17.2)††	41.64	32.87	2.80	39.77	32.05	3.05	37.85	31.21	3.35	35.82	30.33	3.69	33.59	29.38	4.09	31.14	28.32	4.56
	62 (16.7)	41.13	40.72	2.80	39.50	39.50	3.05	37.95	37.95	3.35	36.27	36.27	3.69	34.43	34.43	4.10	32.35	32.35	4.56
	57 (13.9)	40.93	40.93	2.80	39.44	39.44	3.05	37.89	37.89	3.35	36.22	36.22	3.69	34.38	34.38	4.10	32.31	32.31	4.56
1575	72 (22.2)	49.87	28.75	2.90	47.56	27.92	3.15	45.18	27.07	3.44	42.68	26.18	3.78	39.99	25.24	4.18	37.06	24.23	4.65
	67 (19.4)	45.42	36.42	2.88	43.33	35.58	3.13	41.19	34.72	3.43	38.93	33.82	3.77	36.49	32.84	4.17	33.83	31.75	4.64
	63 (17.2)††	42.22	34.88	2.87	40.28	34.04	3.12	38.30	33.18	3.42	36.20	32.27	3.76	33.93	31.29	4.16	31.44	30.18	4.63
	62 (16.7)	42.38	42.38	2.87	40.78	40.78	3.13	39.13	39.13	3.42	37.35	37.35	3.77	35.40	35.40	4.17	33.21	33.21	4.64
	57 (13.9)	42.32	42.32	2.87	40.73	40.73	3.13	39.08	39.08	3.42	37.31	37.31	3.77	35.35	35.35	4.17	33.17	33.17	4.64

EVAPORATOR AIR		CONDENSER ENTERING AIR TEMPERATURES °F (°C)																	
		75 (23.9)			85 (29.4)			95 (35)			105 (40.6)			115 (46.1)			125 (51.7)		
CFM	EWB °F (°C)	Capacity MBtuh		Total System KW**	Capacity MBtuh		Total System KW**	Capacity MBtuh		Total System KW**	Capacity MBtuh		Total System KW**	Capacity MBtuh		Total System KW**	Capacity MBtuh		Total System KW**
		Total	Sens‡		Total	Sens‡		Total	Sens‡		Total	Sens‡		Total	Sens‡		Total	Sens‡	
N4A548GKA Outdoor Section With EA*4X61L24 Indoor Section**																			
1400	72 (22.2)	53.91	26.70	3.12	51.70	25.95	3.46	49.29	25.14	3.81	46.61	24.25	4.20	43.50	23.23	4.66	39.94	22.07	5.22
	67 (19.4)	49.07	33.08	3.15	47.03	32.30	3.47	44.83	31.48	3.81	42.36	30.56	4.19	39.52	29.52	4.65	36.26	28.33	5.22
	63 (17.2)††	45.60	31.80	3.16	43.67	31.02	3.48	41.61	30.19	3.81	39.31	29.27	4.18	36.66	28.22	4.64	33.61	27.02	5.22
	62 (16.7)	44.81	39.26	3.16	42.96	38.43	3.48	41.03	40.90	3.80	39.14	39.14	4.18	36.99	36.99	4.64	34.49	34.49	5.22
	57 (13.9)	44.02	44.02	3.16	42.51	42.51	3.48	40.91	40.91	3.80	39.08	39.08	4.18	36.94	36.94	4.64	34.44	34.44	5.22
1600	72 (22.2)	54.74	28.18	3.20	52.46	27.42	3.54	49.97	26.60	3.89	47.17	25.68	4.28	43.95	24.64	4.74	40.30	23.48	5.30
	67 (19.4)	49.91	35.43	3.22	47.78	34.64	3.55	45.50	33.80	3.89	42.95	32.87	4.27	40.01	31.79	4.73	36.67	30.58	5.30
	63 (17.2)††	46.41	33.99	3.23	44.41	33.19	3.55	42.28	32.35	3.89	39.89	31.40	4.26	37.15	30.32	4.72	34.04	29.09	5.30
	62 (16.7)	45.97	45.97	3.23	44.36	44.36	3.55	42.62	42.62	3.89	40.65	40.65	4.27	38.35	38.35	4.73	35.68	35.68	5.30
	57 (13.9)	45.90	45.90	3.23	44.29	44.29	3.55	42.56	42.56	3.89	40.59	40.59	4.27	38.30	38.30	4.73	35.63	35.63	5.30
1800	72 (22.2)	55.35	29.59	3.27	53.00	28.82	3.62	50.43	27.99	3.97	47.55	27.07	4.35	44.26	26.02	4.82	40.51	24.83	5.38
	67 (19.4)	50.51	37.70	3.29	48.34	36.90	3.63	45.99	36.05	3.97	43.37	35.09	4.35	40.38	33.98	4.81	37.00	32.68	5.38
	63 (17.2)††	47.02	36.10	3.31	44.97	35.29	3.63	42.77	34.42	3.97	40.33	33.45	4.34	37.54	32.33	4.81	34.39	30.98	5.38
	62 (16.7)	47.51	47.51	3.31	45.80	45.80	3.63	43.96	43.96	3.97	41.87	41.87	4.35	39.44	39.44	4.81	36.63	36.63	5.38
	57 (13.9)	47.45	47.45	3.31	45.74	45.74	3.63	43.91	43.91	3.97	41.82	41.82	4.35	39.40	39.40	4.81	36.58	36.58	5.38

See notes on page 7

DETAILED COOLING CAPACITIES# CONTINUED

EVAPORATOR AIR		CONDENSER ENTERING AIR TEMPERATURES °F (°C)																	
		75 (23.9)			85 (29.4)			95 (35)			105 (40.6)			115 (46.1)			125 (51.7)		
CFM	EWB °F (°C)	Capacity MBtuh		Total System KW**	Capacity MBtuh		Total System KW**	Capacity MBtuh		Total System KW**	Capacity MBtuh		Total System KW**	Capacity MBtuh		Total System KW**	Capacity MBtuh		Total System KW**
N4A560GKA Outdoor Section With EA*4X60L24 Indoor Section**																			
1750	72 (22.2)	68.41	35.82	4.01	65.35	34.67	4.39	62.15	33.49	4.86	58.70	32.23	5.39	55.01	30.89	5.96	50.87	29.41	6.55
	67 (19.4)	62.24	44.04	4.01	59.41	42.88	4.38	56.50	41.69	4.83	53.38	40.43	5.35	50.00	39.08	5.91	46.23	37.59	6.49
	63 (17.2)††	57.78	42.37	4.02	55.13	41.19	4.37	52.41	39.99	4.81	49.54	38.75	5.32	46.39	37.40	5.87	42.89	35.91	6.45
	62 (16.7)	56.92	52.17	4.02	54.40	50.96	4.37	51.84	49.69	4.81	49.16	49.16	5.32	46.64	46.64	5.88	43.73	43.73	6.46
	57 (13.9)	55.64	55.64	4.02	53.56	53.56	4.37	51.43	51.43	4.81	49.13	49.13	5.32	46.56	46.56	5.88	43.68	43.68	6.46
2000	72 (22.2)	69.54	37.55	4.10	66.36	36.39	4.49	63.04	35.18	4.96	59.50	33.91	5.49	55.63	32.53	6.06	51.36	31.03	6.66
	67 (19.4)	63.30	46.83	4.11	60.35	45.64	4.47	57.34	44.44	4.93	54.11	43.16	5.45	50.61	41.77	6.01	46.74	40.24	6.60
	63 (17.2)††	58.79	44.95	4.11	56.04	43.76	4.47	53.23	42.55	4.91	50.24	41.27	5.42	47.00	39.89	5.98	43.39	38.33	6.56
	62 (16.7)	58.25	55.83	4.11	55.72	55.33	4.47	53.37	53.37	4.91	50.91	50.91	5.43	48.16	48.16	5.99	45.09	45.09	6.58
	57 (13.9)	57.80	57.80	4.11	55.59	55.59	4.47	53.30	53.30	4.91	50.84	50.84	5.43	48.11	48.11	5.99	45.03	45.03	6.58
2250	72 (22.2)	70.37	39.17	4.20	67.10	37.99	4.59	63.67	36.77	5.06	60.02	35.48	5.59	56.04	34.08	6.17	51.66	32.55	6.76
	67 (19.4)	64.08	49.47	4.20	61.08	48.28	4.57	57.95	47.04	5.03	54.64	45.73	5.55	51.07	44.31	6.12	47.12	42.69	6.70
	63 (17.2)††	59.56	47.41	4.20	56.73	46.20	4.56	53.82	44.95	5.01	50.77	43.65	5.52	47.44	42.21	6.08	43.78	40.57	6.66
	62 (16.7)	59.69	59.69	4.20	57.32	57.32	4.56	54.90	54.90	5.02	52.28	52.28	5.53	49.41	49.41	6.10	46.17	46.17	6.69
	57 (13.9)	59.58	59.58	4.20	57.25	57.25	4.56	54.83	54.83	5.02	52.23	52.23	5.53	49.35	49.35	6.10	46.12	46.12	6.69

† Total and sensible capacities are net capacities. Blower motor heat has been subtracted.
‡ Sensible capacities shown are based on 80°F (27°C) entering air at the indoor coil. For sensible capacities at other than 80°F (27°C), deduct 835 Btuh (245 kW) per 1000 CFM (480 L/S) of indoor coil air for each degree below 80°F (27°C), or add 835 Btuh (245 kW) per 1000 CFM (480 L/S) of indoor coil air per degree above 80°F (27°C).
# Detailed cooling capacities are based on indoor and outdoor unit at the same elevation per AHRI standard 210/240−2008. If additional tubing length and/or indoor unit is located above outdoor unit, a slight variation in capacity may occur.
** System kw is total of indoor and outdoor unit kilowatts.
†† At TVA rating indoor condition (75°F edb/63°F ewb). All other indoor air temperatures are at 80°F edb.
NOTE: When the required data falls between the published data, interpolation may be performed. Extrapolation is not an acceptable practice.
EWB — Entering Wet Bulb

ACCESSORY USAGE GUIDELINE

Accessory	REQUIRED FOR LOW–AMBIENT APPLICATIONS {Below 55°F (13°C)}	REQUIRED FOR LONG–LINE APPLICATIONS*
Crankcase Heater	**Yes**	**Yes**
Evaporator Freeze Thermostat	**Yes**	No
Winter Start Control	**Yes****	No
TXV	**Yes**	**Yes‡**
Hard Start Kit (Capacitor & Relay)	**Yes**	**Yes**
Low Ambient Kit (Pressure Switch)	**Yes**	No
Support Feet, 4” (102mm) tall	Recommended	No

* Refer to the Long Line Application Guideline document.
** Can only be installed in conjunction with the Low Pressure Switch
‡ TXV required beyond 20 ft (6.1m) vertical separation or 50 ft (15.2) total length.

ACCESSORIES

Part Number	Description	Used On Model Size
NASA001CH	Crankcase Heater for Scroll Compressor (208/230 V)	42 – 60
NASA003CH	Crankcase Heater for Scroll Compressor (208/230 V)	18 – 36
NASA001SC	Start Component – PTC Device	24 – 60
NASA00201FS	Evaporator Freeze Thermostat	ALL
NASA403PS	Low Pressure Switch, AC, R–410A	ALL
NASA401LS	Liquid Line Solenoid Valve, R–410A	ALL
NASA001TD	Time Delay Relay, Indoor Blower	ALL
NASA00201WS	Winter Start Control	ALL
NASA001AC	Anti–Cycle Timer (5 minute delay)	ALL
NASA404PS	High Pressure Switch, AC or HP, R–410A	ALL
NASA005SC	Hard Start Kit (Capacitor & Relay)	ALL
NASA401LA	Low Ambient Kit (Pressure Switch), R–410A	ALL
NASA00201SF	Support Feet, 4” (102mm) tall (5 blocks)	18 – 36
NASA001SF	Support Feet, 4” (102mm) tall (4 blocks)	42 – 60
NASA001SJ	Sound Jacket, Compressor	18 – 48
NASA003SJ	Sound Jacket, Compressor	60
EBAC05TXVX	TXV Kit, R–410A – 2005–2009 R–22 TXV Fancoils (air handlers)	18 – 30
EBAC06TXVX	TXV Kit, R–410A – 2005–2009 R–22 TXV Fancoils (air handlers)	36 – 42
EBAC07TXVX	TXV Kit, R–410A – 2005–2009 R–22 TXV Fancoils (air handlers)	48 – 60
NAEA40501TX	TXV Kit, R–410A for use with copper or tin fan coils	18 – 30
NAEA40601TX	TXV Kit, R–410A for use with copper or tin fan coils	36 – 42
NAEA40701TX	TXV Kit, R–410A for use with copper or tin fan coils	60
NAEA40501TX	TXV Kit, R–410A for use with aluminum fan coils	18 – 30
NAEA40601TX	TXV Kit, R–410A for use with aluminum fan coils	36 – 42
NAEA40701TX	TXV Kit, R–410A for use with aluminum fan coils	60

Copyright 2016 International Comfort Products
Lewisburg, Tennessee 37091 USA
www.GoHeil.com

Specifications subject to change without notice.