N8MXL

Product Specifications

80% ECM Single Stage Heating Furnace

EASIER TO SELL

- 80% AFUE
- Flame roll–out sensors standard
- Category I venting
- Blocked vent switch
- 24 VAC humidifier terminal
- Electronic air cleaner terminal
- N8MXL model California NOx approved
- Cabinet air leakage less than 2.0% at 1.0 in. w.c. and cabinet air leakage less than 1.4% at 0.5 in. w.c. when tested in accordance with ASHRAE standard 193

TOUGHER

- ECM blower motor
- Adjustable heating blower OFF delay
- Factory set blower ON delay
- RPJ aluminized steel heat exchanger
- High temperature limit control prevents overheating
- Direct ignition with Silicon Nitride ignitor
- One piece prepainted steel cabinet

QUIETER

- In–shot burners
- Insulated blower compartment

EASIER TO INSTALL AND SERVICE

- 33 1/3” (847mm) high, for ease of installation
- Innovative knobs for easy door removal and secure attachment
- Factory shipped for natural gas, with propane gas conversion kits available
- Four position – upflow/downflow/horizontal (left/right) installation
- Three position vent elbow capability
- Through the casing flue pipe for counterflow applications
- Common venting with other Category I appliances
- Masonry chimney adapter available
- Self diagnostics
- Slide out blower assembly

LIMITED WARRANTY *

- 20 year heat exchanger limited warranty
- 10 year parts limited warranty with timely registration
- 5 year parts limited warranty if not registered within 90 days of original installation

Illustrations and photographs are only representative.
Some product models may vary.

⚠ WARNING

This furnace is not designed for use in mobile homes, trailers, or recreational vehicles. Such use could result in property damage and/or death.

Certified System ™

ISO 9001
QMI-SAI Global

AHRI CERTIFIED™ www.ahridirectory.org

Use of the AHRI Certified TM Mark indicates a manufacturer’s participation in the program. For verification of certification for individual products, go to www.ahridirectory.org .

DESIGN CERTIFIED ®

* For residential applications only. See warranty certificate for complete details and restrictions, including warranty coverage for other applications.

Model	Input (MBTUH)	Efficiency AFUE	Cooling Capacity CFM range @ .5 in. w.c. (125 Pa)	Dimensions H x W x D Inches (Millimeters)	Shipping Wt. Lbs (Kg)
N8MXL0451412A	44,000	80%	415 – 1080	33–1/3 x 14–3/16 x 29 (847 x 360 x 737)	104 (47)
N8MXL0701712A	66,000	80%	385 – 1005	33–1/3 x 17–1/2 x 29 (847 x 445 x 737)	126 (57)
N8MXL0701716A	66,000	80%	875 – 1435	33–1/3 x 17–1/2 x 29 (847 x 445 x 737)	126 (57)
N8MXL0901714A	88,000	80%	750 – 1210	33–1/3 x 17–1/2 x 29 (847 x 445 x 737)	127 (58)
N8MXL0902116A	88,000	80%	845 – 1445	33–1/3 x 21 x 29 (847 x 533 x 737)	140 (64)
N8MXL0902120A	88,000	80%	915 – 1980	33–1/3 x 21 x 29 (847 x 533 x 737)	140 (64)
N8MXL1102120A	110,000	80%	990 – 2040	33–1/3 x 21 x 29 (847 x 533 x 737)	152 (69)
N8MXL1352420A	132,000	80%	1025 – 1810	33–1/3 x 24–1/2 x 29 (847 x 622 x 737)	163 (74)

MODEL NUMBER IDENTIFICATION GUIDE

DIGIT POSITION	1	2	3	4	5	6,7,8	9,10	11,12	13	14
	N	**8**	**M**	**X**	**L**	**045**	**14**	**12**	**A**	**1**

N = Entry

8 = 80% AFUE — **EFFICIENCY**

M = Multiposition — **POSITION**

V = Variable Speed Blower Motor – ECM
X = ECM Blower Motor
S = Single–stage
T = Two–stage — **TYPE**

N = Standard
L = Low NOx — **FEATURE**

045 = 44,000 BTU/hr
070 = 66,000 BTU/hr
090 = 88,000 BTU/hr
110 = 110,000 BTU/hr
135 = 132,000 BTU/hr — **HEAT INPUT**

14 = 14–3/16”
17 = 17–1/2”
21 = 21”
24 = 24–1/2” — **CABINET WIDTH**

12 = 1200 CFM
14 = 1400 CFM
16 = 1600 CFM
20 = 2000 CFM
22 = 2200 CFM — **NOMINAL MAXIMUM COOLING AIRFLOW @ .5 IN. W.C.**

SALES (MAJOR) REVISION DIGIT

ENGINEERING (MINOR) REVISION DIGIT

ECM—Electronically Commutated Motor

ACCESSORIES PART NUMBER IDENTIFICATION GUIDE

DIGIT POSITION	1	2	3	4	5, 6, 7	8, 9	10, 11
	N	**A**	**H**	**A**	**001**	**01**	**DH**

N = Non–Branded — **BRANDING**

A = Accessory — **PRODUCT GROUP**

H = Heating — **KIT USAGE**

A = Original
B = 2nd Generation — **MAJOR SERIES**

Product Identifier Number

Package Quantity

Type of Kit (Example: DH = Draft Hood – Chimney Adapter)

PHYSICAL DATA									
NATURAL GAS		0451412A	0701712A	0701716A	0901714A	0902116A	0902120A	1102120A	1352420A
INPUT BTUH*	Upflow	44,000	66,000	66,000	88,000	88,000	88,000	110,000	132,000
	Hz/Downflow	42,000	63,000	63,000	84,000	84,000	84,000	105,000	126,000
OUTPUT CAPACITY BTUH* (Nonweatherized ICS) †	Upflow	36,000	54,000	54,000	71,000	72,000	72,000	90,000	107,000
	Hz/Downflow	34,000	51,000	51,000	68,000	68,000	68,000	85,000	102,000
AFUE † *	Nonweatherized ICS	80.0	80.0	80.0	80.0	80.0	80.0	80.0	80.0
TRANSFORMER (24 volt)		40 VA							
CERTIFIED TEMP RISE RANGE – °F (°C)		30–60 (17–33)	35–65 (19–36)	25–55 (14–31)	40–70 (22–39)	35–65 (19–36)	35–65 (19–36)	30–60 (17–33)	40–70 (22–39)
CERTIFIED EXT STATIC PRESSURE	Heating	.10	.12	.12	.15	.15	.15	.20	.20
	Cooling	.50	.50	.50	.50	.50	.50	.50	.50
AIRFLOW CFM‡	Heating	710	982	1205	1203	1418	1650	1890	1760
	Cooling	1080	1005	1435	1210	1445	1980	2040	1810
LIMIT CONTROL		SPST							
HEATING BLOWER CONTROL		Solid–State Time Operation							
BURNERS (Monoport)		2	3	3	4	4	4	5	6
GAS CONNECTION SIZE		1/2 inch NPT							
GAS VALVE (Redundant) Manufacturer		White–Rodgers							
Minimum Inlet Pressure (in. w.c.)		4.5 (Natural Gas)							
Maximum Inlet Pressure (in. w.c.)		13.6 (Natural Gas)							
IGNITION DEVICE		Hot Surface							

* Gas input ratings are certified for elevations to 2000 ft. (610 M). In USA, for elevations above 2000 ft. (610 M), reduce ratings 4 percent for each 1000 ft. (305 M) above sea level. Refer to National Fuel Gas Code NFPA 54/ANSI Z223.1–2009 Table F.4 or furnace Installation Instructions.

† Capacity in accordance with U.S. Government DOE test procedures.

‡ Airflow shown is for bottom only return–air supply in comfort mode (as shipped). For air delivery above 1800 CFM, see Air Delivery Table for other options. A filter is required for each return-air supply.

ICS — Isolated Combustion System

ELECTRICAL DATA									
FURNACE MODEL	Volts–Hertz–Phase	Operating Voltage* Range		Maximum Unit Amps	Unit Ampacity#	Minimum Wire Size AWG	Maximum Wire Length‡ ft (m)		Maximum Fuse or CKT BKR† Amps
		Maximum	Minimum						
0451412	115–60–1	127	104	5.6	7.8	14.0	47.0	(14.3)	15.0
0701712	115–60–1	127	104	5.6	7.8	14.0	47.0	(14.3)	15.0
0701716	115–60–1	127	104	10.0	13.3	14.0	27.0	(8.2)	15.0
0901714	115–60–1	127	104	8.2	11.0	14.0	33.0	(10.1)	15.0
0902116	115–60–1	127	104	8.2	11.0	14.0	33.0	(10.1)	15.0
0902120	115–60–1	127	104	12.9	16.9	12.0	33.9	(10.3)	20.0
1102120	115–60–1	127	104	13.4	17.4	12.0	33.0	(10.1)	20.0
1352420	115–60–1	127	104	10.7	14.0	14.0	26.0	(7.9)	15.0

* Permissible limits of the voltage range at which the unit operates satisfactorily.
† Time–delay type is recommended.
‡Length shown is as measured 1 way along wire path between unit and service panel for maximum 2 percent voltage drop.

UNIT DIMENSIONS

NOTES:
1. Doors may vary by model.
2. Two additional 7/8-in. (22 mm) diameter holes are located in the top plate.
3. Minimum return-air openings at furnace, based on metal duct. If flex duct is used, see flex duct manufacturer's recommendations for equivalent diameters.
   a. For 800 CFM-16-in. (406 mm) round or 14 1/2 x 12-in. (368 x 305 mm) rectangle.
   b. For 1200 CFM-20-in. (508 mm) round or 14 1/2 x 19 1/2-in. (368 x 495 mm) rectangle.
   c. For 1600 CFM-22-in. (559 mm) round or 14 1/2 x 22 1/16-in. (368 x 560mm) rectangle.
   d. Return air above 1800 CFM may require one of the following configurations:
      2 sides, 1 side and a bottom or bottom only for return air. See Air Delivery table in this document for specific use to allow for sufficient airflow to the furnace.

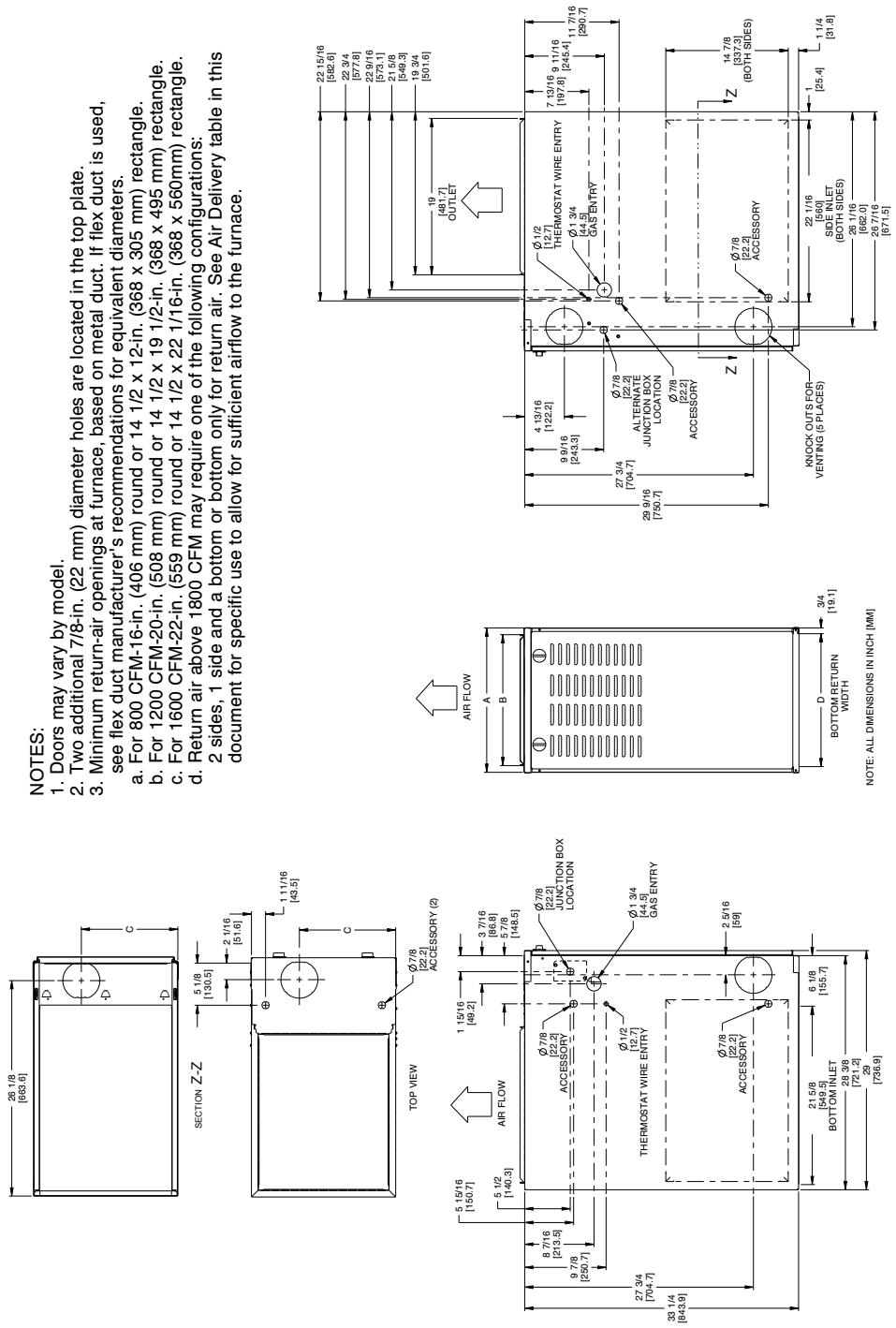

N8MXL	A CABINET WIDTH IN (MM)	B OUTLET WIDTH IN (MM)	C TOP AND BOTTOM OUTLET IN (MM)	D BOTTOM INLET WIDTH IN (MM)	VENT CONNECTION SIZE	SHIP WT LB (KG)
0451412A	14–3/16 (360)	12–9/16 (319)	9–5/16 (237)	12–11/16 (322)	4	104 (47)
0701712A	17–1/2 (445)	15–7/8 (403)	11–9/16 (294)	16–1/8 (410)	4	126 (57)
0701716A	17–1/2 (445)	15–7/8 (403)	11–9/16 (294)	16–1/8 (410)	4	126 (57)
0901714A	17–1/2 (445)	15–7/8 (403)	11–9/16 (294)	16–1/8 (410)	4	127 (58)
0902116A	21 (533)	19–3/8 (492)	13–5/16 (338)	19–1/2 (495)	4	140 (64)
0902120A	21 (533)	19–3/8 (492)	13–5/16 (338)	19–1/2 (495)	4	140 (64)
1102120A	21 (533)	19–3/8 (492)	13–5/16 (338)	19–1/2 (495)	4	152 (69)
1352420A	24–1/2 (622)	22–7/8 (581)	15–1/16 (383)	23 (584)	4 †	163 (74)

† 135 Btu/h size furnaces require 5 inch (127 mm) vents. Use a 4—5 inch (102—127 mm) vent adaptor between furnace and vent stack. See installation instructions for complete installation requirements.

DOWNFLOW VENT CONFIGURATIONS

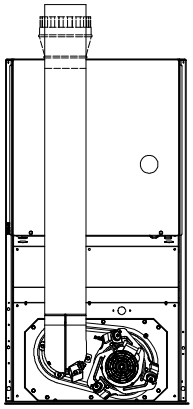

SEE NOTES: 1,2,4,5,7,8,9 A02061

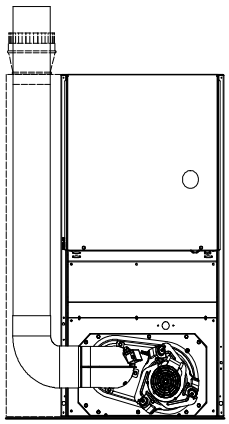

SEE NOTES: 1,2,4,5,6,7,8,9 A02062

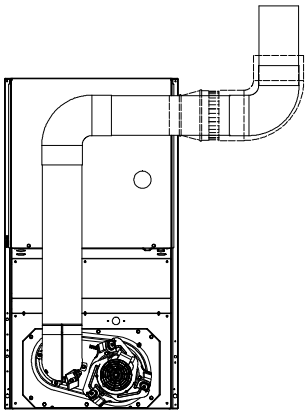

SEE NOTES: 1,2,3,4,5,7,8,9 A02063

DOWNFLOW CONTINUTED

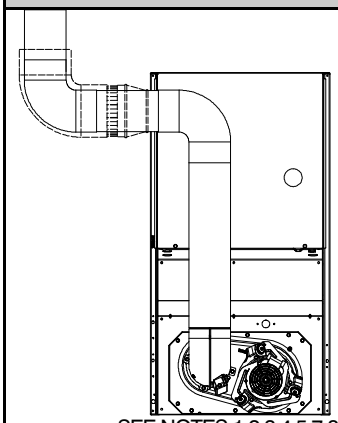

SEE NOTES:1,2,3,4,5,7,8,9 A02060

UPFLOW VENT CONFIGURATIONS

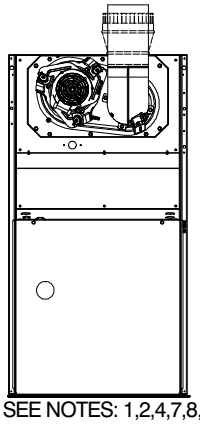

SEE NOTES: 1,2,4,7,8,9 A02058

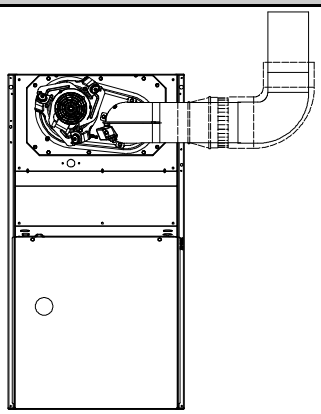

SEE NOTES: 1,2,3,4,7,8,9 A02059

HORIZONTAL RIGHT VENT CONFIGURATIONS

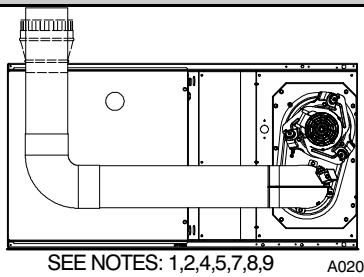

SEE NOTES: 1,2,4,5,7,8,9 A02070

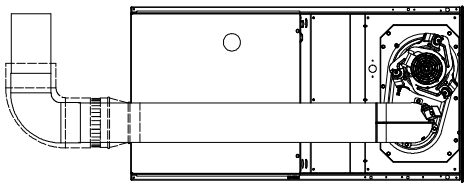

SEE NOTES: 1,2,4,5,7,8,9 A02068

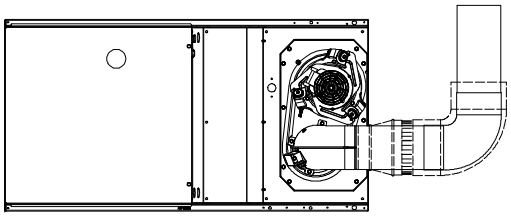

SEE NOTES: 1,2,4,7,8,9 A02069

HORIZONTAL LEFT VENT CONFIGURATIONS

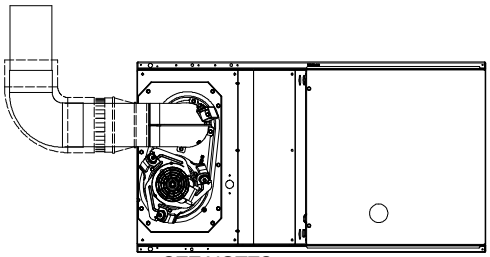

SEE NOTES: 1,2,4,7,8,9 A02064

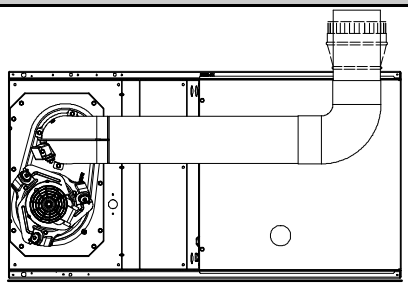

SEE NOTES: 1,2,4,5,7,8,9 A02065

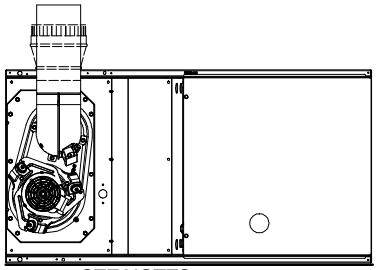

SEE NOTES: 1,2,4,5,7,8,9 A02066

HORIZONTAL LEFT VENT CONFIGURATIONS

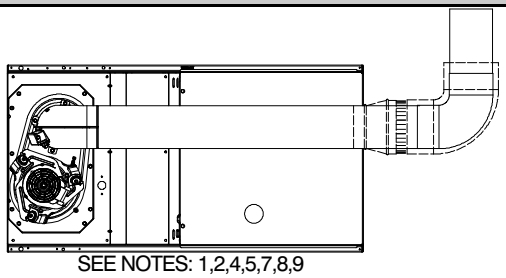

SEE NOTES: 1,2,4,5,7,8,9 A02067

Venting Notes

1. For common vent, vent connector sizing and vent material: United States–use the NFGC.
2. Immediately increase to 5 inch (127 mm) or 6–inch (152 mm) vent connector outside furnace casing when 5 inch (127 mm) vent connector is required, refer to Note 1 above.
3. Side outlet vent for upflow and downflow installations must use Type B vent immediately after exiting the furnace, except when Downflow Vent Guard Kit, is used in the downflow position.
4. Type–B vent where required, refer to Note 1 above.
5. 4 inch single–wall (26 ga. min.) vent must be used inside furnace casing and when the Downflow Vent Guard Kit is used external to the furnace.
6. Accessory Downflow Vent Guard Kit, required in downflow installations with lower vent configuration.
7. Chimney Adapter Kit may be required for exterior masonry chimney applications. Refer to Chimney Adapter Kit, for sizing and complete application details.
8. Secure vent connector to furnace elbow with (2) corrosion–resistant sheet metal screws, spaced approximately 180° apart.
9. Secure all other single wall vent connector joints with (3) corrosion resistant screws spaced approximately 120° apart. Secure Type–B vent connectors per vent connector manufacturer's recommendations.

MINIMUM CLEARANCES TO COMBUSTIBLE MATERIALS FOR ALL UNITS

This forced air furnace is equipped for use with natural gas at altitudes 0 – 10,000 ft (0 – 3,050m).

An accessory kit, supplied by the manufacturer, shall be used to convert to propane gas use or may be required for some natural gas applications.

This furnace is for indoor installation in a building constructed on site.

The furnace may be installed on combustible flooring in alcove or closet at minimum clearance as indicated by the diagram from combustible material.

This furnace may be used with a Type B–1 Vent and may be vented in common with other gas fired appliances.

This furnace is approved for UPFLOW, DOWNFLOW, and HORIZONTAL installations.

Downflow Positions:

† Installation on non–combustible floors only.
For Installation on combustible flooring only when installed on special base or coil assembly.

∅ 18 inch front clearance required for alcove.

* Indicate supply or return sides when furnace is in the horizontal position. Line contact only permissible between lines formed by intersections of the Top and two Sides of the furnace jacket, and building joists, studs or framing.

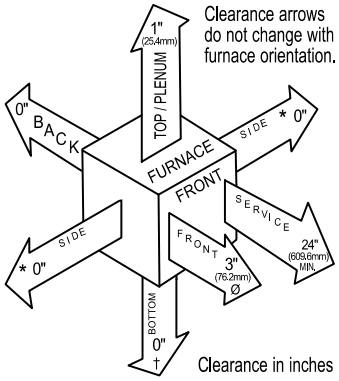

Vent Clearance to combustibles:
For Single Wall vents 6 inches (6 po).
For Type B-1 vent type 1 inch (1 po).

BLOWER PERFORMANCE DATA								
N8MXL	**0451412**	**0701712**	**0701716**	**0901714**	**0902116**	**0902120**	**1102120**	**1352420**
DIRECT-DRIVE MOTOR Hp (ECM)	1/3	1/3	3/4	1/2	1/2	1	1	3/4
MOTOR FULL LOAD AMPS	4.4	4.4	8.8	6.8	6.8	11.5	11.5	8.8
RPM (Nominal) – Speeds	1050–5	1050–5	1050–5	1050–5	1050–5	1050–5	1050–5	1050–5
BLOWER WHEEL DIAMETER WIDTHS – in (mm)	10 x 6 (254 152)	11 x 8 (279 x 203)	11 x 8 (279 x 203)	11 x 8 (279 x 203)	10 x 10 (254 x 254)	11 x 11 (279 x 279)	11 x 11 (279 x 279)	11 x 11 (279 x 279)

AIR DELIVERY – CFM (with filter)*												
UNIT SIZE	WIRE–LEAD COLOR	SPEED	Test Airflow Delivery @ Various External Static Pressures (in. w.c.)									
			0.1	0.2	0.3	0.4	0.5	0.6	0.7	0.8	0.9	1
0451412	Gray	5	1230	1190	1155	1120	1080	1045	1010	975	935	895
	Yellow	4	980	945	920	890	855	815	770	735	690	645
	Orange	3	770	720	685	640	600	560	520	475	430	385
	Blue	2	710	660	620	580	540	490	455	415	375	335
	Red	1	600	540	500	455	415	385	345	305	235	––
0701712	Gray	5	1185	1140	1095	1055	1005	960	915	865	820	780
	Yellow	4	1000	940	895	850	800	750	695	650	600	555
	Blue	3	990	935	895	845	790	740	690	640	590	535
	Orange	2	855	775	720	660	605	560	495	435	385	335
	Red	1	860	685	515	445	385	340	275	205	––	––
0701716	Gray	5	1610	1565	1525	1475	1435	1395	1350	1305	1260	1215
	Yellow	4	1385	1335	1290	1250	1205	1165	1125	1075	1025	980
	Blue	3	1215	1165	1120	1075	1035	985	940	895	845	840
	Orange	2	1175	1130	1085	1035	990	945	900	855	805	760
	Red	1	1080	1015	955	920	875	820	780	725	670	620
0901714	Gray	5	1355	1320	1285	1245	1210	1165	1125	1080	1025	815
	Yellow	4	1295	1255	1220	1185	1140	1100	1055	1005	955	815
	Blue	3	1220	1185	1150	1105	1065	1025	975	915	840	740
	Orange	2	1030	985	940	900	845	790	715	655	590	535
	Red	1 [3]	945	905	855	800	750	670	600	540	490	435
0902116	Gray	5	1625	1580	1535	1490	1445	1395	1340	1260	1135	995
	Blue	4	1440	1395	1350	1305	1255	1200	1145	1090	1040	950
	Yellow	3	1425	1380	1335	1290	1235	1185	1125	1075	1020	940
	Orange	2	1260	1210	1160	1105	1050	990	935	880	820	755
	Red	1 [3]	1095	1040	980	905	845	780	720	650	585	520
0902120	Gray	5	2180	2130	2080	2030	1980	1925	1870	1805	1745	1680
	Yellow	4	1900	1845	1795	1740	1685	1635	1570	1500	1435	1375
	Blue	3	1685	1620	1565	1505	1455	1385	1320	1260	1200	1140
	Orange	2	1390	1315	1240	1175	1095	1030	970	900	825	760
	Red	1 [3]	1240	1155	1075	990	915	835	765	690	615	555
1102120	Gray	5	2255	2205	2150	2100	2040	1985	1920	1835	1735	1615
	Yellow	4	1600	1525	1465	1400	1335	1275	1210	1150	1080	1015
	Blue	3	1945	1890	1830	1770	1715	1655	1600	1545	1480	1430
	Orange	2	1420	1340	1280	1200	1140	1065	1005	925	865	790
	Red	1	1280	1205	1140	1055	990	910	840	760	695	630
1352420	Gray	5	2065	2005	1940	1875	1810	1740	1670	1600	1530	1470
	Blue	4	1825	1760	1695	1630	1560	1490	1420	1350	1275	1205
	Yellow	3	1760	1690	1625	1555	1485	1415	1345	1275	1200	1130
	Orange	2	1620	1550	1480	1405	1335	1260	1195	1130	1065	995
	Red	1 [3]	1325	1260	1185	1100	1025	955	885	805	735	670

NOTES:

1. A filter is required for each return–air inlet. Airflow performance includes a 3/4 in. (19 mm) washable filter media such as contained in factory–authorized accessory filter rack. See accessory list. To determine airflow performance without this filter, assume an additional 0.1 in. W.C. available external static pressure.
2. **ADJUST THE BLOWER SPEED TAPS AS NECESSARY FOR THE PROPER AIR TEMPERATURE RISE FOR EACH INSTALLATION.**
3. Highlighted areas indicate airflow range is beyond the range allowed for heating. THESE AIRFLOW RANGES MAY ONLY BE USED FOR COOLING.

–– Indicates unstable operating conditions.

ACCESSORIES									
PART NUMBER	DESCRIPTION	0451412	0701712	0701716	0701714	0902116	0902120	1102120	1352420
NAHB00501FF	External Bottom Filter Rack, 14 inch (14 x 25 inch washable filter included)	X							
NAHB00601FF	External Bottom Filter Rack, 17 inch (16 x 25 inch washable filter included)		X	X	X				
NAHB00701FF	External Bottom Filter Rack, 21 inch (20 x 25 inch washable filter included)					X	X	X	
NAHB00801FF	External Bottom Filter Rack, 24 inch (24 x 25 inch washable filter included								X
NAHA00506FB†	Washable filter, 1 inch 16 x 25 (6 pack)	X	X	X	X				
NAHA00706FB	Washable filter, 1 inch 24 x 25 (6 pack)					X	X	X	X
NAHA01001FF	Side Filter Rack 16 x 25 (not adjustable)	X	X	X	X	X	X	X	X
NAHA01006FF	Side Filter Racks 16 x 25 (6 pack)	X	X	X	X	X	X	X	X
NAHA01101SB	Combustible Floor Base (Not required when evaporator coil case is used for downflow)	X	X	X	X	X	X	X	X
NAHB00301VC	Downflow Vent Guard (Not required when vent is routed through cabinet)	X	X	X	X	X	X	X	X
NAHA00401DH	Chimney Adapter Kit 4−in. vent	X	X	X	X	X	X	X	
NAHA00301DH	Chimney Adapter Kit 5−in. vent								X
NAHD00901LP*	Natural−to−Propane Conversion Kit	X	X	X	X	X	X	X	X
NAHD00901NG*	Propane−to−Natural Conversion Kit	X	X	X	X	X	X	X	X

X Accessory available
† Suitable for side return filter rack and 17 inch external bottom filter rack.
* Factory authorized and field installed. Gas conversion kits are CSA recognized.

Copyright 2017 International Comfort Products
Lewisburg, Tennessee 37091 USA
www.GoKeeprite.com