G96CTN (Series B)
Two-Stage, Variable Speed, 4-Way Multipoise, Condensing Gas Furnace

ICP COMMERCIAL

Product Data

SYST0101CW Recommended (sold separately)

A200356

Representative drawing only. Some product models may vary.

Use of the AHRI Certified TM Mark indicates a manufacturer's participation in the program. For verification of certification for individual products, go to www.ahridirectory.org .

ISO 9001 Quality

A200326

⚠ WARNING

CARBON MONOXIDE POISONING AND FIRE HAZARD

Failure to follow this warning could result in personal injury, death, and/or property damage.

This furnace is not designed for use in recreation vehicles, manufactured (mobile) homes or outdoors.

Failure to follow this warning could result in personal injury, death, and/or property damage.

EASIER TO SELL

- Up to 96.7% AFUE in upflow and horizontal positions 95% AFUE in downflow position
- Two-stage heating operation
- ION™ Communicating Control System
- Variable-speed, constant airflow ECM blower motor for extra SEER boost with select cooling equipment
- Supports single-stage, two-stage, and variable speed cooling units
- Dehumidification feature in cooling
- All sizes can be installed in air quality management districts with a 40 ng/J NOx emissions requirement
- Cabinet air leakage less than 2.0% at 1.0 in. w.c. and cabinet air leakage less than 1.4% at 0.5 in. w.c. when tested in accordance with ASHRAE standard 193

TOUGHER

- Flame roll-out sensors standard
- Adjustable heating blower OFF delay
- Factory set blower ON delay
- RPJ® primary heat exchanger
- Stainless steel secondary heat exchanger
- High temperature limit control designed to prevent overheating
- Direct ignition with Silicon Nitride ignitor

EASIER TO INSTALL AND SERVICE

- Direct vent (2-pipe), single-pipe venting or ventilated combustion air
- 24 VAC humidifier terminal
- Electronic air cleaner terminal
- 35" (889mm) high, for ease of installation
- Quarter turn knobs for easy door removal and secure attachment
- Convertible to propane with gas conversion accessory kit
- Four position - upflow/downflow/horizontal (left/right) installation
- At least twelve different venting configurations
- Through the casing flue pipe for counterflow or horizontal applications with accessory (order separately)
- Self-configuring and communicating control
- Concentric vent available
- Slide out heat exchanger assembly and blower assembly

LIMITED WARRANTY *

- 10 year No Hassle Replacement™ limited warranty
- Lifetime heat exchanger limited warranty with timely registration
- 5 year parts limited warranty

-With timely registration, an additional 5 year parts limited warranty

*For residential applications only. See warranty certificate for complete details and restrictions, including warranty coverage for other applications.

DIMENSIONAL DRAWING

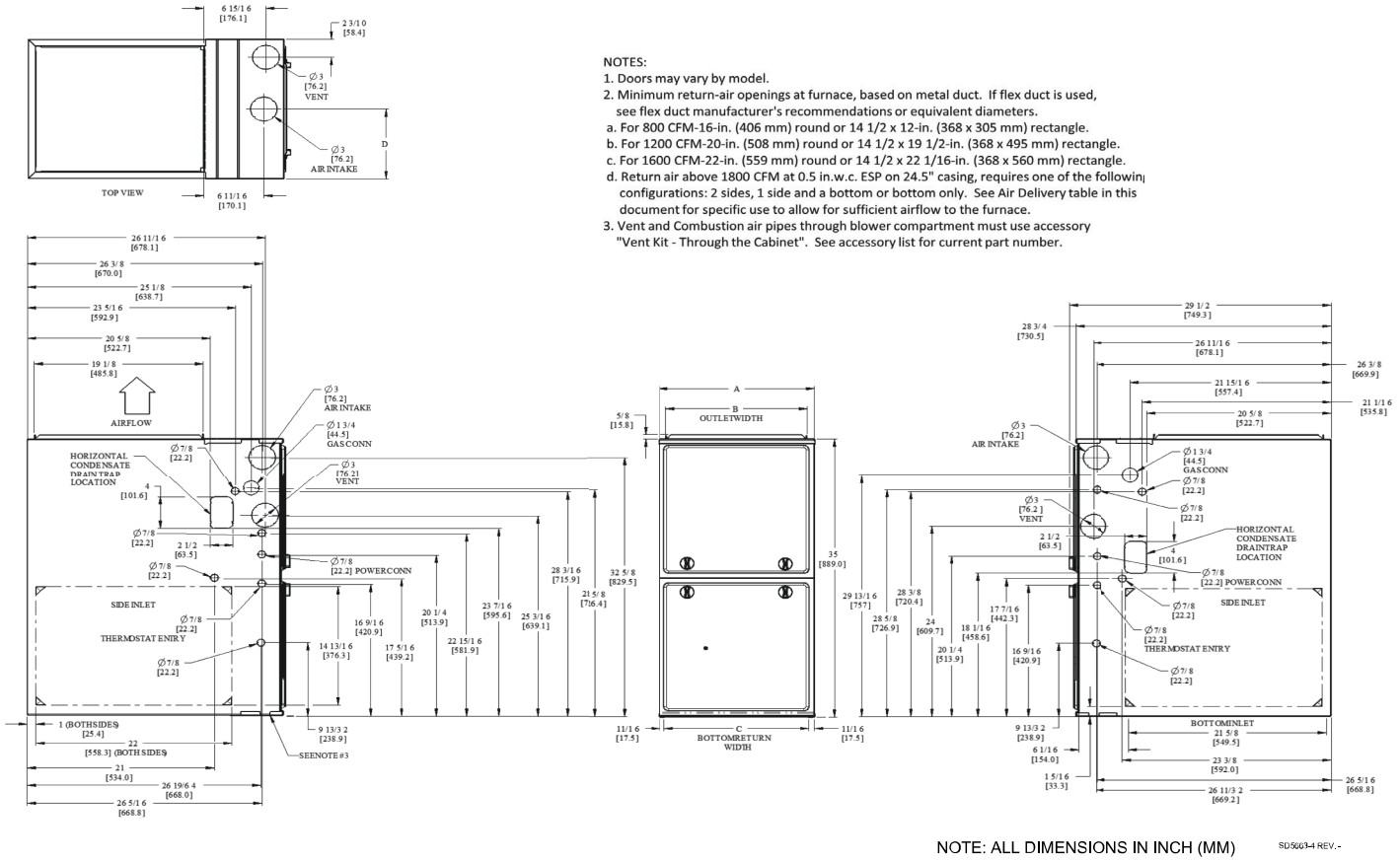

A210796

Dimensions

FURNACE SIZE	A	B	C	D	SHIP WT. LB (KG)
	CABINET WIDTH	OUTLET WIDTH	BOTTOM INLET WIDTH	AIR INTAKE	
0401410	14-3/162 (361)	12-1/2 (319)	12-9/16 (322)	7-1/8 (181)	125 (56.7)
0601714	17-1/2 (445)	15-7/8 (403)	16 (406)	8-3/4 (222)	143 (64.6)
0801714	17-1/2 (445)	15-7/8 (403)	16 (406)	8-3/4 (222)	145 (65.5)
0802120	21 (533)	19-3/8 (492)	19-1/2 (495)	10-1/2 (267)	157 (71.0)
1002122	21 (533)	19-3/8 (492)	19-1/2 (495)	10-1/2 (267)	167 (75.7)
1202422	24-1/2 (622)	22-7/8 (581)	23 (584)	12-1/4 (311)	188 (85.0)

Manufacturer reserves the right to change, at any time, specifications and designs without notice and without obligations.

MODEL NUMBER NOMENCLATURE

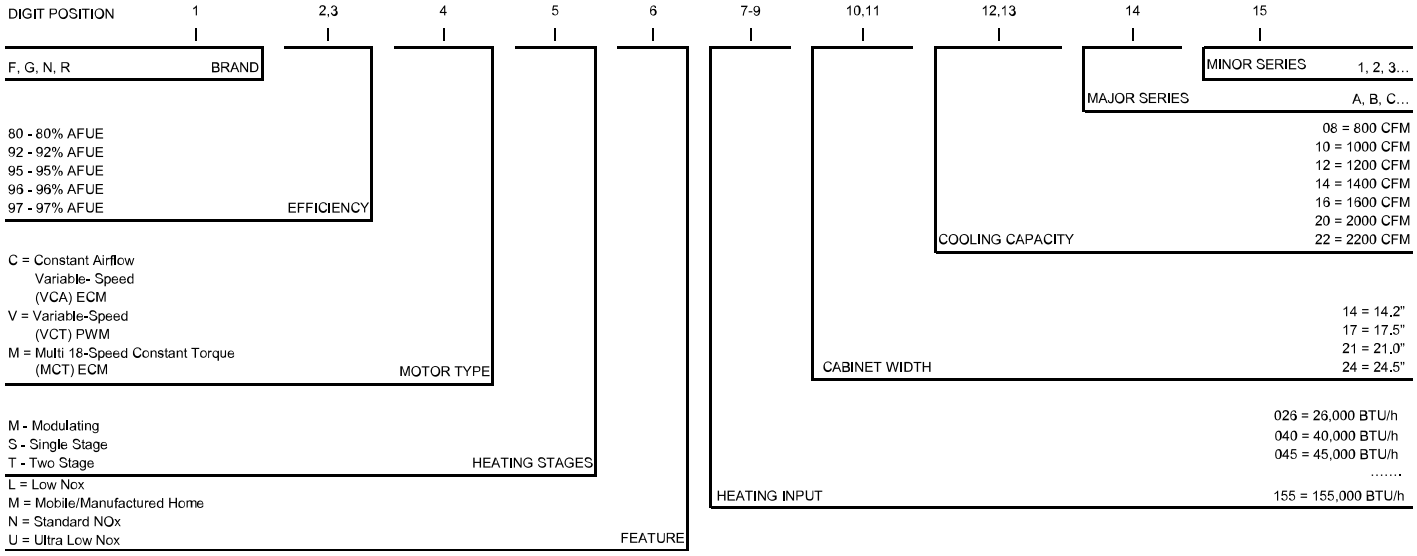

A221575

For California Residents:

For installation in SCAQMD only: This furnace does not meet the SCAQMD Rule 1111 14 ng/J NOx emission limit, and thus is subject to a mitigation fee of up to $450. This furnace is not eligible for the Clean Air Furnace Rebate Program: www.CleanAirFurnaceRebate.com

FURNACE COMPONENTS

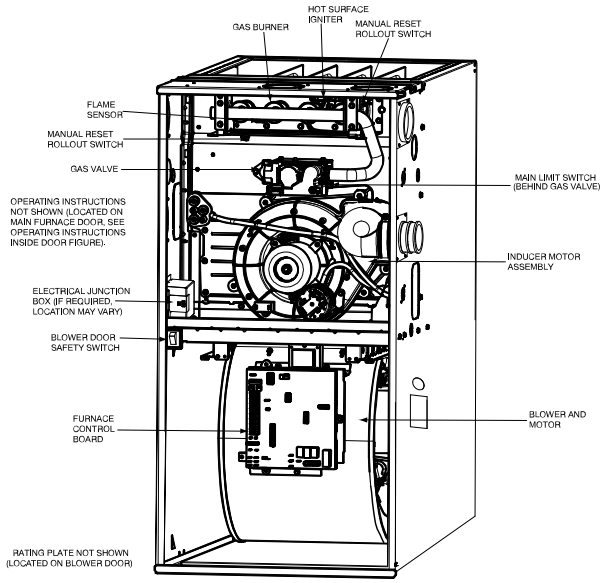

A190145

MINIMUM CLEARANCES TO COMBUSTIBLE MATERIALS

POSITION	CLEARANCE
Rear	0 (0 mm)
Front (Combustion air openings in furnace and in structure)	1 in. (25 mm)
Required for service*	24 in. (610 mm)†
All Sides of Supply Plenum*	1 in. (25 mm)
Sides	0 (0 mm)
Vent	0 (0 mm)
Top of Furnace	1 in. (25 mm)

*. Consult your local buildin codes
†. Recommended

The furnace should be sized to provide 100 percent of the design heating load requirement plus any margin that occurs because of furnace model size capacity increments. None of the furnace model sizes can be used if the heating load is 20,000 BTU or lower. Use Air Conditioning Contractors of America (Manual J and S); American Society of Heating, Refrigerating, and Air-Conditioning Engineers; or other approved engineering method to calculate heating load estimates and select the furnace. Excessive oversizing of the furnace may cause the furnace and/or vent to fail prematurely, customer discomfort and/or vent freezing.

Failure to follow these guidelines is considered faulty installation and/or misapplication of the furnace; and resulting failure, damage, or repairs may impact warranty coverage.

SPECIFICATIONS

		UNIT SIZE	0401410	0601714	0801714	0802120	1002122	1202422
HEATING AND CAPACITY AND EFFICIENCY								
INPUT BTUH*	High Heat	(BTUH)	40,000	60,000	80,000	80,000	100,000	120,000
	Low Heat	(BTUH)	26,000	39,000	52,000	52,000	65,000	78,000
OUTPUT CAPACITY (BTUH)†	High Heat	(BTUH)	39,000	59,000	78,000	78,000	98,000	117,000
	Low Heat	(BTUH)	25,000	38,000	51,000	51,000	54,000	76,000
CERTIFIED TEMPERATURE RISE RANGE - °F (°C)		High Heat	40 - 70 (22 - 39)	35 - 65 (19 - 36)	40 - 70 (22 - 39)	40 - 70 (22 - 39)	45 - 75 (25 - 42)	45 - 75 (25 - 42)
		Low Heat	30 - 60 (17 - 3)	30 - 60 (17 - 3)	30 - 60 (17 - 3)	30 - 60 (17 - 3)	30 - 60 (17 - 3)	30 - 60 (17 - 3)
AFUE†		Upflow/Horizontal	96	96.3	96.2	96.7	96.1	96.7
		Downflow	95	95	95	95	95	95
AIRFLOW CAPACITY AND BLOWER DATA								
Rated Certified External Static Pressure		Heating	0.1	0.12	0.15	0.15	0.2	0.2
		Cooling	0.5	0.5	0.5	0.5	0.5	0.5
Airflow CFM @ Rated ESP (CFM)‡		High Heat	580	1045	1215	1250	1475	1880
		Low Heat	465	758	955	970	1280	1495
		Cooling	995	1270	1350	1985	2165	2190
Cooling Capacity (tons)		400 CFM/ton	2.5	3	3.5	4.5	5	5.5
		350 CFM/ton	3	3.5	4	5.5	6	6
Direct Drive Motor Type			Electronically Commutated Motor (ECM)					
Direct Drive Motor HP			1/2	1/2	1/2	1	1	1
Motor Full Load Amps			6.3	6.7	6.3	11.5	11.5	11.0
RPM Range			300 - 1300					
Heating Blower Control (Htg Off-Delay)			Adjustable: 90, 120 (factory set), 150, 180 seconds					
Cooling Blower Control (Time Delay Relay)			Adjustable: 90 (factory-set), 5, 30, 60 seconds					
Blower Wheel Diameter x Width - In. (mm)			12 x 8	11 x 8	11 x 8	11 x 10	11 x 10	11 x 11
Air Filtration System			Field Supplied Filter					
Filter used for Certified Watt Data			325531-40**					
ELECTRICAL DATA								
INPUT VOLTAGE		Unit Volts-Hertz-Phase	115-60-1					
OPERATING VOLTAGE RANGE		Min-Max	104-127					
MAXIMUM UNIT AMPS			7.1	7.3	7.1	13.1	13.2	11.9
UNIT AMPACITY			9.8	10	9.8	17.3	17.4	15.7
MAXIMUM WIRE LENGTH								
MEASURE 1 WAY IN FT		Feet	37	37	37	33	33	36
(M)		Meters	11.3	11.3	11.3	10.1	10.1	11
MINIMUM WIRE SIZE		AWG	14	14	14	12	12	12
MAX. FUSE/CKT BKR SIZE (TIME-DELAY TYPE RECOMMENDED)		Amps	15	15	15	20	20	20
TRANSFORMER CAPACITY (24 VAC OUTPUT)			40VA					
EXTERNAL CONTROL POWER AVAILABLE		Heating	24VA					
		Cooling	35VA					

SPECIFICATIONS (Continued)

UNIT SIZE		0401410	0601714	0801714	0802120	1002122	1202422
GAS CONTROLS							
BURNERS		3	3	4	4	5	6
GAS CONNECTION SIZE		1/2in. NPT					
GAS VALVE (REDUNDANT)	Mfr	WhiteRodgers™					
MIN. INLET PRESSURE	(in.w.c.)	4.5 (Natural Gas)					
MAX. INLET PRESSURE	(in.w.c.)	13.6 (Natural Gas)					
MANUFACTURED (MOBILE HOME KIT)		See Accessory Listing					
IGNITION DEVICE		Silicon Nitride					
FACTORY INSTALLED ORIFICE		44	44	44	44	44	44
CONNECTIONS							
Communication System		ION™ Communicating Control SYST0101CW					
Thermostat Connections		R, W/W1, W2, Y/Y2, Y1, G Com 24V, DHUM					
Accessory Connections		EAC-1 (115 VAC); HUM (24 VAC); 1-STG AC (via Y/Y2); 2-STG AC (cia Y/Y2 and Y1)					

*. Gas input ratings are certified for elevations to 2000 ft. (610 M). In USA, For elevations above 2000 ft (610 M), reduce ratings 4 percent for each 1000 ft (305 M) above sea level. Refer to National Fuel Gas Code NFPA 54/ANSI Z223.1 Table F.4 or furnace installation instructions.

†. Capacity in accordance with U.S. Government DOE test procedures.

‡. Airflow shown is for bottom only return-air supply for the as-shipped speed tap. For air delivery above 1800 CFM, see Air Delivery table for other options. A filter is required for each return-air supply. An airflow reduction of up to 7 percent may occur when using the factory-specified 4-5/16-in. (110 mm) wide, high efficiency media filter.

**. See Accessory List for part numbers available.

AIR DELIVERY - CFM (WITH FILTER)

0401410													
Available Cooling Airflow Settings (CFM)	320	400	450	488	525	555	600	*650	700	740	800	†875	925
	975	1000											
Available Constant Fan Airflow Settings (CFM)	‡320	400	450	488	525	555	600	650	700	740	800	875	925
	975												
Airflow reduces by 2% - 3% per 0.1 of ESP above the noted static for these airflow settings	Airflow		ESP (in. w.c.)										
	1000		0.8										
Max Cooling ESP	0.1	0.2	0.3	0.4	0.5	0.6	0.7	0.8	0.9	1			
**Max Cooling CFM	1045	1015	1005	990	995	1000	1000	1000	965	925			

0601714													
Available Cooling Airflow Settings (CFM)	400	450	488	525	555	600	650	700	740	800	875	*925	975
	1000	1050	1138	1200	†1225	1300	1410						
Available Constant Fan Airflow Settings (CFM)	‡400	450	488	525	555	600	650	700	740	800	875	925	975
	1000												
Airflow reduces by 2% - 3% per 0.1 of ESP above the noted static for these airflow settings	Airflow		ESP (in. w.c.)										
	1200		0.7										
	1225		0.6										
	1300		0.2										
	1410		0.1										
Max Cooling ESP	0.1	0.2	0.3	0.4	0.5	0.6	0.7	0.8	0.9	1			
**Max Cooling CFM	1405	1370	1335	1305	1270	1235	1200	1170	1135	1105			

0801714													
Available Cooling Airflow Settings (CFM)	400	450	488	525	555	600	650	700	740	800	875	*925	975
	1000	1050	1138	1200	†1225	1300	1400						
Available Constant Fan Airflow Settings (CFM)	‡400	450	488	525	555	600	650	700	740	800	875	925	975
	1000												
Airflow reduces by 2% - 3% per 0.1 of ESP above the noted static for these airflow settings	Airflow Setting		ESP (in. w.c.)										
	1225		0.7										
	1300		0.5										
	1400		0.1										
Max Cooling ESP	0.1	0.2	0.3	0.4	0.5	0.6	0.7	0.8	0.9	1			
**Max Cooling CFM	1485	1455	1420	1390	1350	1315	1275	1230	1190	1150			

0802120													
Available Cooling Airflow Settings (CFM)	650	700	740	800	875	925	975	1000	1050	1138	1200	1225	*1300
	1400	1480	1600	1625	†1750	1850	1911	2000					
Available Constant Fan Airflow Settings (CFM)	‡650	700	740	800	875	925	975	1000	1050	1138	1200	1225	1300
	1400												
Airflow reduces by 2% - 3% per 0.1 of ESP above the noted static for these airflow settings	Airflow		ESP (in. w.c.)										
	2000		0.9										
Max Cooling ESP	0.1	0.2	0.3	0.4	0.5	0.6	0.7	0.8	0.9	1			
**Max Cooling CFM	2005	1995	1995	1995	1985	2005	2015	2025	2015	1975			

1002122													
Available Cooling Airflow Settings (CFM)	650	700	740	800	875	925	975	1000	1050	1138	1200	1225	1300
	*1400	1480	1600	1625	1750	1850	†1911	2000	2110				
Available Constant Fan Airflow Settings (CFM)	‡650	700	740	800	875	925	975	1000	1050	1138	1200	1225	1300
	1400												
Airflow reduces by 2% - 3% per 0.1 of ESP above the noted static for these airflow settings	Airflow Setting		ESP (in. w.c.)										
	1911		0.9										
	2000		0.7										
	2110		0.5										
Max Cooling ESP	0.1	0.2	0.3	0.4	0.5	0.6	0.7	0.8	0.9	1			
**Max Cooling CFM	2190	2195	2200	2195	2165	2125	2085	2040	1995	1950			

Manufacturer reserves the right to change, at any time, specifications and designs without notice and without obligations.

AIR DELIVERY - CFM (WITH FILTER) (CONTINUED)

1202422													
Available Cooling Airflow Settings (cfm)	650	700	740	800	875	925	975	1000	1050	1138	1200	1225	*1300
	1400	1480	1600	1625	†1750	1850	1911	2000	2110				
Available Constant Fan Airflow Settings (CFM)	‡650	700	740	800	875	925	975	1000	1050	1138	1200	1225	1300
	1400												
Airflow reduces by 2% - 3% per 0.1 of ESP above the noted static for these airflow settings	Airflow Setting		ESP (in. w.c.)										
	1911		0.8										
	2000		0.7										
	2110		0.5										
Max Cooling ESP	0.1	0.2	0.3	0.4	0.5	0.6	0.7	0.8	0.9	1			
Max Cooling CFM	2220	2220	2235	2220	2190	2140	2085	2030	1975	1925			

*. Low Cooling Default
†. High Cooling Default
‡. Constant Fan Default Not Recommended
**. Max Cooling values are test CFM all other airflows are standard CFM

For Heating Settings

Eff1 airflow will give midpoint rise
Eff2 will increase heating airflow (when unit is capable)
Com2 will decrease heating airflow (defaults)
Com1 will give the lowest heating airflow

Notes:

ESP is External Static Pressure
Airflow values up to 1 in. w.c. ESP (unless noted)

TYPICAL WIRING SCHEMATIC

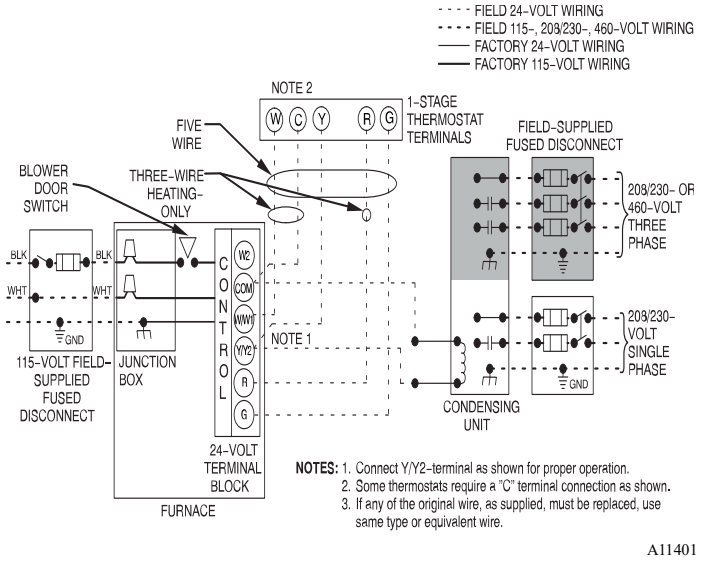

A11401

FURNACE CONTROL BOARD

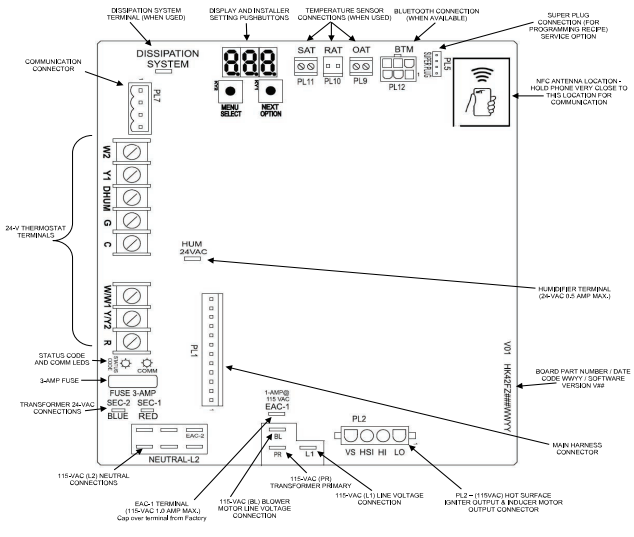

0

A230451

MAXIMUM ALLOWABLE EXPOSED VENT LENGTHS INSULATION TABLE

Maximum Allowable Exposed Vent Length in Unconditioned Space - Ft.

Winter Design Temp °F	Unit Size	40,000* BTUH									60,000 BTUH											
		Uninsulated			3/8-in. Insulation			1/2-in. Insulation			Uninsulated				3/8-in. Insulation				1/2-in. Insulation			
	Pipe Dia. in.	1 ½	2	2 ½	1 ½	2	2 ½	1 ½	2	2 ½	1 ½	2	2 ½	3	1 ½	2	2 ½	3	1 ½	2	2 ½	3
	20	20	20	20	20	50	45	20	60	50	20	30	30	25	20	75	65	60	20	85	75	65
	0	10	5	5	20	25	20	20	30	25	15	15	10	10	20	40	30	25	20	45	40	30
	-20	5			20	15	10	20	20	15	10	5			20	25	20	15	20	30	25	20
	-40				15	10	5	15	15	10	5				20	15	15	10	20	20	15	10

Winter Design Temp °F	Unit Size	80,000 BTUH														
		Uninsulated					3/8-in. Insulation					1/2-in. Insulation				
	Pipe Dia. in.	1 ½	2	2 ½	3	4	1 ½	2	2 ½	3	4	1 ½	2	2 ½	3	4
	20	15	40	40	35	30	15	50	90	75	65	15	50	70	70	70
	0	15	20	15	10	5	15	50	45	35	30	15	50	50	40	35
	-20	15	10	5			15	35	30	20	15	15	40	30	25	15
	-40	10	5				15	25	20	15	5	15	30	25	20	10

Winter Design Temp °F	Unit Size	100,000 BTUH											
		Uninsulated				3/8-in. Insulation				1/2-in. Insulation			
	Pipe Dia. in.	2	2 ½	3	4	2	2 ½	3	4	2	2 ½	3	4
	20	20	50	40	35	20	80	95	80	20	80	105	90
	0	20	20	15	10	20	55	45	35	20	65	55	45
	-20	15	10	5		20	35	30	20	20	45	35	25
	-40	10	5			20	25	20	10	20	30	25	15

Winter Design Temp °F	Unit Size	120,000 BTUH									140,000* BTUH								
		Uninsulated			3/8-in. Insulation			1/2-in. Insulation			Uninsulated			3/8-in. Insulation			1/2-in. Insulation		
	Pipe Dia. in.	2 ½	3	4	2 ½	3	4	2 ½	3	4	2 ½	3	4	2 ½	3	4	2 ½	3	4
	20	10	50	40	10	75	95	10	75	105	5	55	50	5	65	105	5	65	125
	0	10	20	15	10	55	45	10	65	50	5	25	15	5	65	50	5	65	60
	-20	10	10		10	35	25	10	45	30	5	10	5	5	45	30	5	50	40
	-40	10	5		10	25	15	10	30	20	5	5		5	30	20	5	35	25

Maximum Allowable Exposed Vent Length in Unconditioned Space - Meters

Winter Design Temp °C	Unit Size	40,000* BTUH									60,000 BTUH											
		Uninsulated			3/8-in. Insulation			1/2-in. Insulation			Uninsulated				3/8-in. Insulation				1/2-in. Insulation			
	Pipe Dia. mm	38	51	64	38	51	64	38	51	64	38	51	64	76	38	51	64	76	38	51	64	76
	-7	6.1	6.1	6.1	6.1	15.2	13.7	6.1	18.3	15.2	6.1	9.1	9.1	7.6	6.1	22.9	19.8	18.3	6.1	25.9	22.9	19.8
	-18	3.0	1.5	1.5	6.1	7.6	6.1	6.1	9.1	7.6	4.6	4.6	3.0	3.0	6.1	12.2	9.1	7.6	6.1	13.7	12.2	9.1
	-29	1.5			6.1	4.6	3.0	6.1	6.1	4.6	3.0	1.5			6.1	7.6	6.1	4.6	6.1	9.1	7.6	6.1
	-40				4.6	3.0	1.5	4.6	4.6	3.0	1.5				6.1	4.6	4.6	3.0	6.1	6.1	4.6	3.0

Winter Design Temp °C	Unit Size	80,000 BTUH														
		Uninsulated					3/8-in. Insulation					1/2-in. Insulation				
	Pipe Dia. mm	38	51	64	76	102	38	51	64	76	102	38	51	64	76	102
	-7	4.6	12.2	12.2	10.7	9.1	4.6	15.2	27.4	22.9	19.8	4.6	15.2	21.3	21.3	21.3
	-18	4.6	6.1	4.6	3.0	1.5	4.6	15.2	13.7	10.7	9.1	4.6	15.2	15.2	12.2	10.7
	-29	4.6	3.0	1.5			4.6	10.7	9.1	6.1	4.6	4.6	12.2	9.1	7.6	4.6
	-40	3.0	1.5				4.6	7.6	6.1	4.6	1.5	4.6	9.1	7.6	6.1	3.0

Winter Design Temp °C	Unit Size	100,000 BTUH											
		Uninsulated				3/8-in. Insulation				1/2-in. Insulation			
	Pipe Dia. mm	51	64	76	102	51	64	76	102	51	64	76	102
	-7	6.1	15.2	12.2	10.7	6.1	24.4	28.9	24.4	6.1	24.4	32.0	27.4
	-18	6.1	6.1	4.6	3.0	6.1	16.8	13.7	10.7	6.1	19.8	16.7	13.7
	-29	4.6	3.0	1.5		6.1	10.7	9.1	6.1	6.1	13.7	10.7	7.6
	-40	3.0	1.5			6.1	7.6	6.1	3.0	6.1	9.1	7.6	4.6

Winter Design Temp °C	Unit Size	120,000 BTUH									140,000* BTUH								
		Uninsulated			3/8-in. Insulation			1/2-in. Insulation			Uninsulated			3/8-in. Insulation			1/2-in. Insulation		
	Pipe Dia. mm	64	76	102	64	76	102	64	76	102	64	76	102	64	76	102	64	76	102
	-7	3.0	15.2	12.2	3.0	22.9	28.9	3.0	22.9	32.0	1.5	16.7	15.2	1.5	19.8	32.0	1.5	19.8	38.1
	-18	3.0	6.1	4.6	3.0	16.8	13.7	3.0	19.8	15.2	1.5	7.6	4.6	1.5	19.8	15.2	1.5	19.8	18.3
	-29	3.0	3.0		3.0	10.7	7.6	3.0	13.7	9.1	1.5	3.0	1.5	1.5	13.7	9.1	1.5	15.2	12.2
	-40	3.0	1.5		3.0	7.6	4.6	3.0	9.1	6.1	1.5	1.5		1.5	9.1	6.1	1.5	35	7.6

* Not all model families have these sizes

MAXIMUM EQUIVALENT VENT LENGTH

NOTE: *Maximum Equivalent Vent Length (MEVL) includes standard and concentric vent termination and does NOT include elbows. Use Deductions from Maximum Equivalent Vent Length to determine allowable vent length for each application.*

Maximum Equivalent Vent Length - Ft.

Maximum Equivalent Vent Length -Ft.

Unit Size		60,000[1]				80,000					100,000[2]				120,000		
Altitude (feet)	Pipe Dia. (in)	1 ½	2	2 ½	3	1 ½	2	2 ½	3	4	2	2 ½	3	4	2 ½	3	4
	0-2000	50	100	175	200	30	95	130	175	200	45	80	175	200	10	75	185
	2001-3000	45	95	165	185		70	125	165	185	40	75	165	185		70	175
	3001-4000	40	90	155	175	25		115	155	175	38		155	175	5	65	165
	4001-4500	35	85	150	170	23		110	150	165	36	70		170	N/A	60	160
	4501-5000		80		165	22			145	160			150	165			
	5001-6000	37	75	140	155			100	135	150	33		140	155			155
	6001-7000	35	70	130	145	20		90	125	140	31		135	145		50	140
	7001-8000	32	66	120	135	18	66		120	125	29	66	125	135		46	130
	8001-9000	30	62	115	125	17	62	80	110	115	27	62	115	125		43	120
	9001-10000	27	57	105	115	15	57	75	100	105	24	57	100	115		39	115

Maximum Equivalent Vent Length - Meters

Unit Size		60,000[1]				80,000					100,000[2]				120,000		
Altitude (meters)	Pipe Dia. (mm)	38	51	64	76	38	51	64	76	102	51	64	76	102	64	76	102
	0-610	15.2	30.4	53.3	60.9	9.1	28.9	39.6	53.3	60.9	13.7	24.3	53.3	60.9	3.0	22.8	56.3
	611-914	13.7	28.9	50.2	56.3		21.3	38.1	50.2	56.3	12.1	22.8	50.2	56.3		21.3	53.3
	915-1219	12.1	27.4	47.2	53.3	7.6		35.0	47.2	53.3	11.5		47.2	53.3	1.5	19.8	50.2
	1220-1370	10.6	25.9	45.7	51.8	7.0		33.5	45.7	50.2	10.9	21.3		51.8	NA	18.2	48.7
	1371-1524		24.3		50.2	6.7			44.1	48.7			45.7	50.2			
	1525-1829	11.2	22.8	42.6	47.2			30.4	41.1	45.7	10.0		42.6	47.2			47.2
	1830-2134	10.6	21.3	39.6	44.1	6.0		27.4	38.1	42.6	9.4		41.1	44.1		15.2	42.6
	2135-2438	9.7	20.1	36.5	41.1	5.4	20.1		36.5	38.1	8.8	20.1	38.1	41.1		14.0	39.6
	2439-2743	9.1	18.8	35.0	38.1	5.1	18.8	24.3	33.5	35.0	8.2	18.8	35.0	38.1		13.1	36.5
	2744-3048	8.2	17.3	32.0	35.0	4.5	17.3	22.8	30.4	32.0	7.3	17.3	30.4	35.0		11.8	35.0

NOTE:

1. Inducer Outlet Restrictor disk (P/N 337683-401; 1.25-in. (32 mm) Dia.) available through Replacement Components required for no greater than 5-ft. (1.5 M) TEVL in downflow and horizontal orientations only. Required for installations from 0-2000 ft. (0 to 610 M) above sea level.
2. Inducer Outlet Restrictor disk (P/N 337683-402; 1.50-in. (38 mm) Dia.) available through Replacement Components required for no greater than 5-ft. (1.5 M) TEVL in downflow and horizontal orientations only. Required for installations from 0-2000 ft. (0 to 610 M) above sea level.

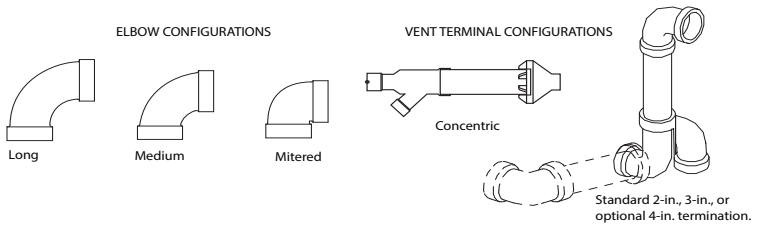

A13110

Deductions from Maximum Equivalent Vent Length - Ft. (M)

Pipe Diameter (in):	1-1/2		2		2-1/2		3		4	
Mitered 90º Elbow	8	(2.4)	8	(2.4)	8	(2.4)	8	(2.4)	8	(2.4)
Medium Radius 90º Elbow	5	(1.5)	5	(1.5)	5	(1.5)	5	(1.5)	5	(1.5)
Long Radius 90º Elbow	3	(0.9)	3	(0.9)	3	(0.9)	3	(0.9)	3	(0.9)
Mitered 45º Elbow	4	(1.2)	4	(1.2)	4	(1.2)	4	(1.2)	4	(1.2)
Medium Radius 45º Elbow	2.5	(0.8)	2.5	(0.8)	2.5	(0.8)	2.5	(0.8)	2.5	(0.8)
Long Radius 45º Elbow	1.5	(0.5)	1.5	(0.5)	1.5	(0.5)	1.5	(0.5)	1.5	(0.5)
Tee	16	(4.9)	16	(4.9)	16	(4.9)	16	(4.9)	16	(4.9)
Concentric Vent Termination	NA		0	(0.0)	NA		0	(0.0)	NA	
Standard Vent Termination	0	(0.0)	0	(0.0)	0	(0.0)	0	(0.0)	0	(0.0)

NOTES:

1. Use only the smallest diameter pipe possible for venting. Over-sizing may cause flame disturbance or excessive vent terminal icing or freeze-up.
2. NA - Not allowed. Pressure switch will not close, or flame disturbance may result.
3. Vent sizing for Canadian installations over 4500 ft. (1370 M) above sea level are subject to acceptance by the local authorities having jurisdiction.
4. Size both the combustion air and vent pipe independently, then use the larger size for both pipes.
5. Assume the two 45° elbows equal one 90° elbow. Wide radius elbows are desirable and may be required in some cases.
6. Elbow and pipe sections within the furnace casing and at the vent termination should not be included in vent length or elbow count.
7. The minimum pipe length is 5 ft. (2 M) linear feet (meters) for all applications.
8. Use 3-in. (76 mm) diameter vent termination kit for installations requiring 4-in. (102 mm) diameter pipe.
9. A running Tee in the Combustion Air Pipe adds 0 ft. to the TEVL of the vent length.

Manufacturer reserves the right to change, at any time, specifications and designs without notice and without obligations.

Venting System Length Calculations

The Total Equivalent Vent Length (TEVL) for **EACH** combustion air or vent pipe equals the length of the venting system, plus the equivalent length of elbows used in the venting system from Maximum Equivalent Vent Length.

Standard vent terminations or factory accessory concentric vent terminations count for zero deduction.

See vent system manufacturer's data for equivalent lengths of flexible vent pipe or other termination systems. **DO NOT ASSUME** that one foot of flexible vent pipe equals one foot of straight PVC/ABS DWV vent pipe.

Compare the Total Equivalent Vent Length to the Maximum Equivalent Vent Lengths Table.

Example 1

A direct-vent 60,000 BTUH furnace installed at 2100 ft. (640M). Venting system includes **FOR EACH PIPE:**
70 feet (22 M) of vent pipe, 65 feet (20 M) of combustion air inlet pipe, (3) 90º long-radius elbows, (2) 45º long-radius elbows, and a factory accessory concentric vent kit.

Can this application use 2" (50 mm ND) PVC/ABS DWV vent piping?

Measure the required linear length of air inlet and vent pipe; insert the longest of the two here					70 ft. (22 M)	Use length of the longer of the vent or air inlet piping system
Add equiv length of (3) 90º long-radius elbows (use the highest number of elbows for either the vent or inlet pipe)	3	x	3 ft. (0.9 M)	=	9 ft. (2.7 M)	From Deductions from Maximum Equivalent Vent Length
Add equiv length of (2) 45º long-radius elbows (use the highest number of elbows for either the vent or inlet pipe)	2	x	1.5 ft. (0.5 M)	=	3 ft. (0.9 M)	From Deductions from Maximum Equivalent Vent Length
Add equiv length of factory concentric vent term					0 ft.	From Deductions from Maximum Equivalent Vent Length
Add correction for flexible vent pipe, if any					0 ft.	From Vent Manufacturer's instructions; zero for PVC/ABS DWV
Total Equivalent Vent Length (TEVL)					82 ft. (25 M)	Add all of the above lines
Maximum Equivalent Vent Length (MEVL)					95 ft. (29 M)	For 2" pipe from Maximum Equivalent Vent Length
Is TEVL less than MEVL?					YES	Therefore, 2" pipe MAY be used

Example 2

A direct-vent 60,000 BTUH furnace installed at 2100 ft. (640M). Venting system includes **FOR EACH PIPE:**
100 feet (30 M) of vent pipe, 95 feet (29 M) of combustion air inlet pipe, (3) 90º long-radius elbows, and a polypropylene concentric vent kit. Also includes 20 feet (6.1 M) of flexible polypropylene vent pipe, included within the 100 feet (30 M) of vent pipe.

VERIFY FROM POLYPROPYLENE VENT MANUFACTURER'S INSTRUCTIONS for the multiplier correction for flexible vent pipe.

Can this application use 60mm o.d. (2") polypropylene vent piping? If not, what size piping can be used?

Measure the required linear length of **RIGID** air inlet and vent pipe; insert the longest of the two here: 100 ft. Of rigid pipe - 20 ft. Of flexible pipe				=	80 ft. (24 M)	Use length of the longer of the vent or air inlet piping system
Add equiv length of (3) 90º long-radius elbows (use the highest number of elbows for either the vent or inlet pipe)	3	x	5 ft. (1.5 M)	=	15 ft. (4.6 M)	Example from polypropylene vent manufacturer's instructions, Verify from vent manufacturer's instructions.
Add equiv length of 45º long-radius elbows (use the highest number of elbows for either the vent or inlet pipe)	0	x		=	0 ft. (0 M)	
Add equiv length of factory concentric vent term	9	x	3.3 ft (0.9 M)	=	30 ft. (9 M)	
Add correction for flexible vent pipe, if any	2*	x	20 ft. (6.1 M)	=	40 ft. (12.2 M)	
* VERIFY FROM VENT MANUFACTURER'S INSTRUCTIONS; For example only, assume 1 meter of flexible 60mm (2") or 80mm (3") polypropylene pipe equals 2.0 meters (6.5 ft.) of PVC/ABS pipe.						
Total Equivalent Vent Length (TEVL)					165 ft. (50 M)	Add all of the above lines
Maximum Equivalent Vent Length (MEVL)					95 ft. (29 M)	For 2" pipe from Maximum Equivalent Vent Length
Is TEVL less than MEVL?					NO	Therefore, 60mm (2") pipe may NOT be used; try 80mm (3")
Maximum Equivalent Vent Length (MEVL)					185 ft. (57 M)	For 3" pipe from Maximum Equivalent Vent Length
Is TEVL less than MEVL?					YES	Therefore, 80mm (3") pipe MAY be used

RETURN AIR TEMPERATURE

This furnace is designed for continuous return-air minimum temperature of 60°F (15°C) db or intermittent operation down to 55°F (13°C) db such as when used with a night setback thermometer. Return-air temperature must not exceed 80°F (27°C) db. Failure to follow these return air limits may affect reliability of heat exchangers, motors and controls.

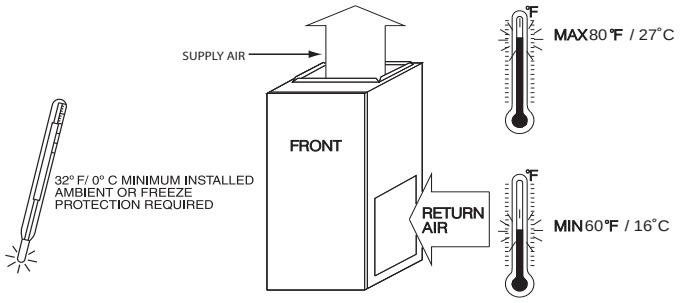

A10490

COMBUSTION-AIR PIPE FOR NON-DIRECT (1-PIPE) VENT APPLICATION

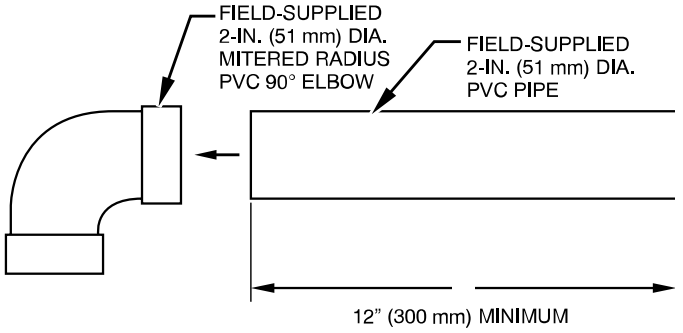

A12376

NOTE: See Installation Instructions for specific venting configurations.

DOWNFLOW SUBBASE

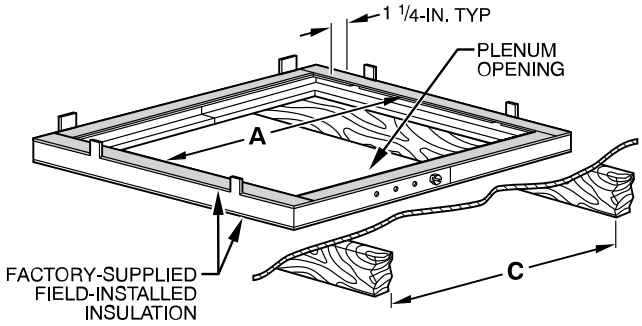

A97427

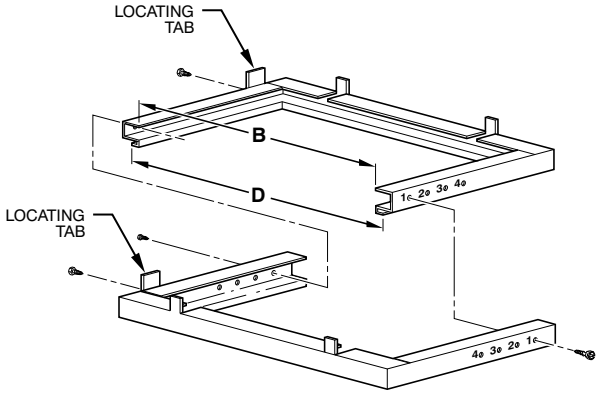

A88207

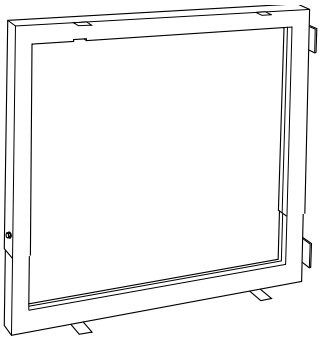

Downflow Subbase

A88202

One base fits all furnace sizes. The base is designed to be installed between the furnace and a combustible floor when no coil box is used or when a coil box other than the manufacturer's cased coil is used. It is CSA design certified for use with the manufacturer's branded furnaces when installed in downflow applications.

DIMENSIONS (IN. / MM)						
FURNACE CASING WIDTH	FURNACE IN DOWNFLOW APPLICATION	PLENUM OPENING*		FLOOR OPENING		HOLE NO. FOR WIDTH ADJUSTMENT
		A	B	C	D	
14-3/16 (360)	Furnace with or without Cased Coil Assembly or Coil Box	11-3/16 (322)	19 (483)	13-7/16 (341)	20-5/8 (600)	4
17-1/2 (445)	Furnace with or without Cased Coil Assembly or Coil Box	15-1/8 (384)	19 (483)	16-3/4 (426)	20-5/8 (600)	3
21 (533)	Furnace with or without Cased Coil Assembly or Coil Box	18-5/8 (396)	19 (483)	20-1/4 (514)	20-5/8 (600)	2
24-1/2 (622)	Furnace with or without Cased Coil Assembly or Coil Box	22-1/8 (562)	19 (483)	23-3/4 (603)	20-5/8 (600)	1

*. The plenum should be constructed 1/4-in. (6 mm) smaller in width and depth than the plenum dimensions shown above.

Manufacturer reserves the right to change, at any time, specifications and designs without notice and without obligations.

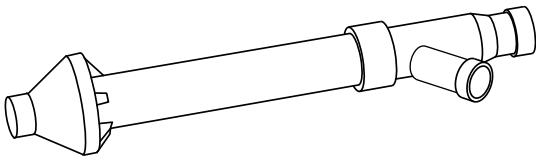

Concentric Vent Kit

A93086

A concentric vent kit allows vent and combustion-air pipes to terminate through a single exit in a roof or side wall. One pipe runs inside the other allowing venting through the inner pipe and combustion air to be drawn in through the outer pipe.

ACCESSORIES

PART NUMBER	DESCRIPTION	0401412	0601714	0801714	0802120	1002122	1002422
NAHA001NK	Condensate Neutralizer Kit	X	X	X	X	X	X
1188594*	Gas Valve Tower Port Adapter Kit	X	X	X	X	X	X
ACG1425NCB*	External Filter Rack, 14-1/2” x 25”	X	-	-	-	-	-
ACG1625NCF*	External Filter Rack, 16” x 25”	-	X	X	-	-	-
ACG2025NCJ*	External Filter Rack, 20” x 25”*	-	-	-	X	X	-
ACG2424NCL*	External Filter Rack, 24-1/2” x 24”*	-	-	-	-	-	X
325531-402*	Washable filter, 3/4” x 16” x 25”*	X	X	X	-	-	-
325531-403*	Washable filter, 3/4” x 20” x 25”*	-	-	-	X	X	-
325531-404*	Washable filter, 3/4” x 24” x 25”*	-	-	-	-	-	X
NAHB00101CA	Coil Adapter Kits - No Offset	X	X	X	X	X	X
NAHB00201CA	Coil Adapter Kits - Single Offset	X	X	X	X	X	X
NAHB00301CA	Coil Adapter Kits - Double Offset	X	X	X	X	X	X
NAHA01401RA	Return Air Base (Upflow Applications) 14-3/16” wide	X	-	-	-	-	-
NAHA01701RA	Return Air Base (Upflow Applications) 17-1/2” wide	X	X	X	-	-	-
NAHA02101RA	Return Air Base (Upflow Applications) 21” wide	-	-	-	X	X	-
NAHA02401RA	Return Air Base (Upflow Applications) 24-1/2 wide	-	-	-	-	-	X
NAHA002CV	Vent Terminal - Concentric - 2” (51 mm)	See Venting Tables					
NAHA001CV	Vent Terminal - Concentric - 3” (76 mm)						
NAHA00301VT	Vent Terminal Bracket - 2” (51 mm)						
NAHA00401VT	Vent Terminal Bracket - 3” (76 mm)						
NAHA00101VC	Vent Kit - Through the Cabinet for HZ left/right ONLY	X	X	X	X	X	X
NAHA00101CK	Polypropylene Inlet Air Pipe Coupling	X	X	X	X	X	X
NAHA00101HH	Freeze Protect Kit - Condensate Drain Line Tape	X	X	X	X	X	X
NAHA00201HH	Freeze Protect Kit - Condensate Trap with Heat Pad	X	X	X	X	X	X
NAHA00110DA	CPVC to PVC Drain Adapters - 1/2” CPVC to 3/4” PVC (10 Pack)	X	X	X	X	X	X
NAHB00101CT	External Trap Kit	X	X	X	X	X	X
NAHA00101HV	Horizontal Trap Grommet - Direct Vent	All 2-Pipe Horizontal					
NAHA01101SB	Downflow Furnace Base Kit for Combustible Floors	X	X	X	X	X	X
AGAGC9NPS01C*	Gas Conversion Kit - Nat to LP†	X	X	X	X	X	X
AGAGC9PNS01C*	Gas Conversion Kit - LP to Nat†	X	X	X	X	X	X
AGATWNPUA01A	Twinning Kit	-	-	-	-	-	-
SYST0101CW	ION™ Communicating Control	X	X	X	X	X	X

*. Order through FAST Parts.
†. Factory authorized and filed installed. Gas conversion kits are CSA recognized.
X = Accessory available

ORIFICES

DESCRIPTION		
Gas Orifice Kit - #42 (Nat Gas)	1185612	See Installation Instructions for model, altitude, and heat value usages.
Gas Orifice Kit - #43 (Nat Gas)	1176928	
Gas Orifice Kit - #44 (Nat Gas)	1185574	
Gas Orifice Kit - #45 (Nat Gas)	1177213	
Gas Orifice Kit - #46 (Nat Gas)	1183809	
Gas Orifice Kit - #47 (Nat Gas)	1185613	
Gas Orifice Kit - #48 (Nat Gas)	1185614	
Gas Orifice Kit - 1.25mm (LP)	1185617	

© 2025 Carrier. All rights reserved.

Manufacturer reserves the right to change, at any time, specifications and designs without notice and without obligations.