TEMPSTAR®
Heating and Cooling Products

T2A3

SmartComfort™ TX 5300

Product Specifications

EFFICIENT 13 SEER AIR CONDITIONER

1½ THRU 5 TONS SPLIT SYSTEM

208 / 230 Volt, 1–phase, 60 Hz



REFRIGERATION CIRCUIT

- Copeland SCROLL compressors on all models
- Filter–Drier supplied with every unit for field installation
- High and Low pressure switches
- Copper tube / aluminum fin coil
- 3½, 4, & 5 ton models have 2–row coil for reduced height

PERFORMANCE

- 2–speed Fan Motors factory wired on all models
- Compressor Sound Jacket standard
- Kickplate across front bottom and corners for extra protection from dents and dings

EASY TO INSTALL AND SERVICE

- Comfort Alert™ Diagnostics device on all models
- Easy Access service valves on all models
- Compressor access panel
- New, innovative control box design
- External high and low refrigerant service ports
- Fan motor in–line disconnect plug
- Only two screws to access control panel
- Factory charged with R–22 refrigerant

BUILT TO LAST

- High gloss, baked–on powder coat finish over galvanized steel
- Post–painted (black) coil fins
- SermaGard® coated cabinet screws
- Coated inlet grille with ⅜" spacing for extra protection
- Corner Posts for extra strength and style
- 1 year No Hassle replacement warranty
- 10 year limited compressor, 5 year limited coil and parts warranties

ARI PERFORMANCE CERTIFIED™
ARI Standard 210/240
Unitary Air Conditioners

Rated in accordance with ARI Standard 210. Certification applies only when used with proper components as listed with ARI.

c UL® us LISTED

NO HASSLE REPLACEMENT WARRANTY
SEE WARRANTY CERTIFICATE FOR DETAILS

Model Number	Size (tons)	Nominal Btu/hr	Min. Circuit Ampacity	Max. Fuse or Breaker	Operating Dimensions height x width x depth (in)	Ship / Operating Weight (lbs)
T2A318GKA	1½	18,000	11.7	20	36¼ x 31 3/16 x 32 5/16	202 / 174
T2A324GKA	2	24,000	18.3	30	36¼ x 31 3/16 x 32 5/16	206 / 178
T2A330GKA	2½	30,000	18.3	30	36¼ x 31 3/16 x 32 5/16	206 / 178
T2A336GKA	3	36,000	19.5	30	47 3/16 x 35 x 36 9/16	264 / 229
T2A342GKA	3½	42,000	23.8	40	33 9/16¼ x 35 x 36 9/16	280 / 247
T2A348GKA	4	48,000	26.6	40	37 x 35 x 36 9/16	300 / 266
T2A360GKA	5	60,000	33.1	50	47 3/16 x 35 x 36 9/16	314 / 279

Specifications subject to change without notice.

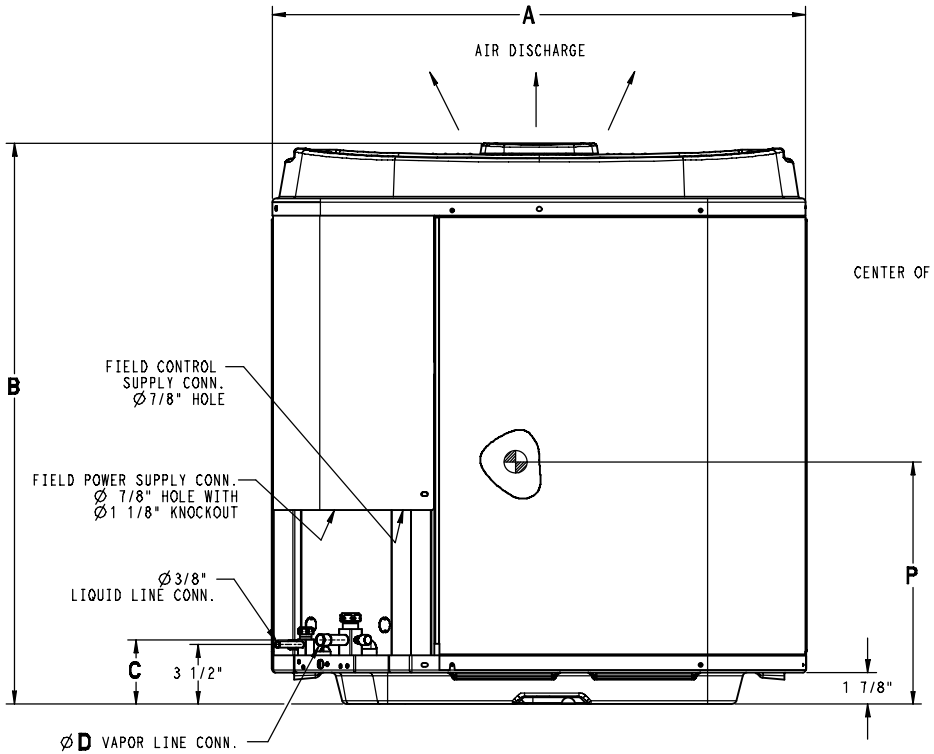

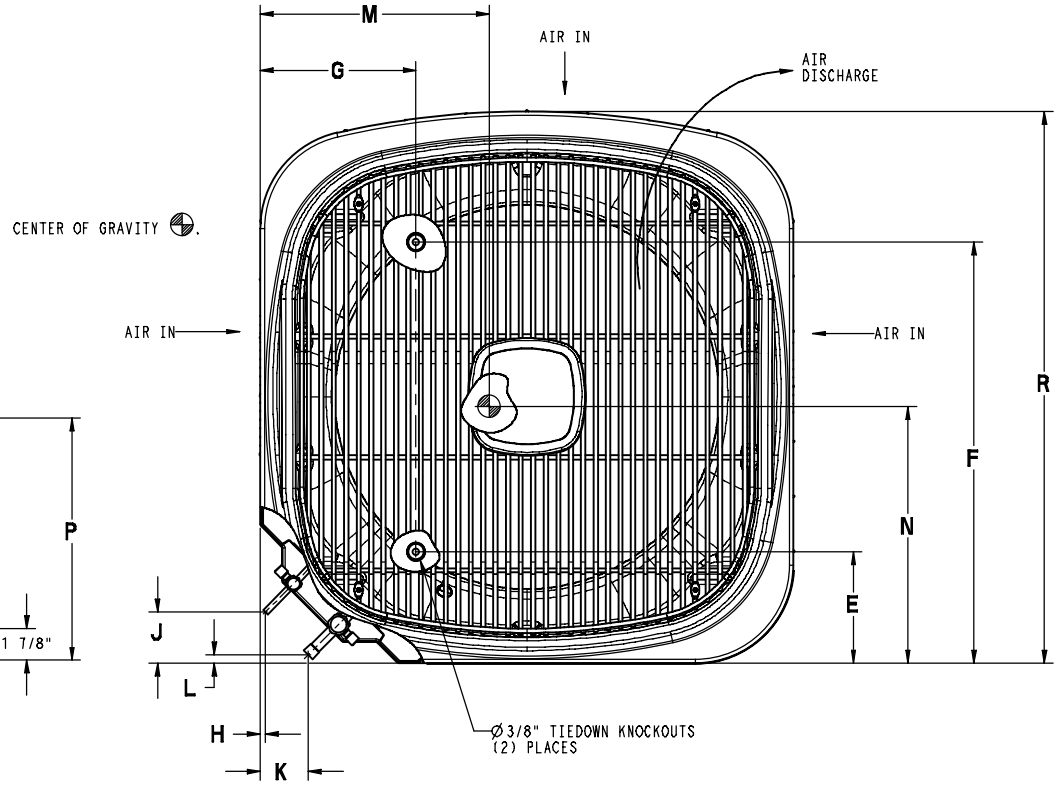

Model	All Dimensions Inches																
	A	B	C	D	E	F	G	H	J	K	L	M	N	P	R	Minimum Mounting Pad Size	Crated Dimensions B(h) x A(w) x R(d)
T2A318GKA	31 3/16	36 1/4	3 3/4	5/8	6 9/16	24 11/16	9 1/8	5/16	3	2 13/16	1/2	15 7/8	15 3/4	15 7/8	32 5/16	31 1/2 x 32 1/2	40 5/8 x 32 3/8 x 33 7/16
T2A324GKA	31 3/16	36 1/4	3 3/4	5/8	6 9/16	24 11/16	9 1/8	5/16	3	2 13/16	1/2	14	15 1/2	16	32 5/16	31 1/2 x 32 1/2	40 5/8 x 32 3/8 x 33 7/16
T2A330GKA	31 3/16	36 1/4	3 3/4	3/4	6 9/16	24 11/16	9 1/8	5/16	3	2 13/16	1/2	16 3/4	14 3/4	16 3/4	32 5/16	31 1/2 x 32 1/2	40 5/8 x 32 3/8 x 33 7/16
T2A336GKA	35	47 3/16	3 3/4	3/4	6 9/16	24 11/16	9 1/8	5/16	3	2 13/16	1/2	19 3/4	18	21 1/4	36 9/16	35 x 36 1/2	50 13/16 x 36 1/8 x 37 3/4
T2A342GKA	35	33 9/16	3 7/8	7/8	6 9/16	24 11/16	9 1/8	5/16	3	2 15/16	5/8	17 3/8	18 7/8	14 3/4	36 9/16	35 x 36 1/2	37 1/4 x 36 1/8 x 37 3/4
T2A348GKA	35	37	3 7/8	7/8	6 9/16	28 7/16	9 1/8	5/16	3	2 15/16	5/8	19	18	15 1/4	36 9/16	35 x 36 1/2	40 5/8 x 36 1/8 x 37 3/4
T2A360GKA	35	47 3/16	3 7/8	7/8	6 9/16	28 7/16	9 1/8	5/16	3	2 15/16	5/8	20 1/2	19 3/4	18 1/2	36 9/16	35 x 36 1/2	50 13/16 x 36 1/8 x 37 3/4

Specifications subject to change without notice.

PHYSICAL DATA							
Model Size	**18**	**24**	**30**	**36**	**42**	**48**	**60**
Nominal Cooling Capacity (BTU/hr)	18,000	24,000	30,000	36,000	42,000	48,000	60,000
Nominal SEER	13.0	13.0	13.0	13.0	13.0	13.0	13.0
Sound Rating, High Speed Fan (dBA) Low Speed Fan, (dBA)	73 73	74 74	75 73	75 73	76 75	76 72	76 72
PSC Fan Motor HP	1/12	1/8	1/8	1/5	1/4	1/4	1/4
Fan RPM High Fan RPM Low	825 750	825 750	825 750	825 750	825 750	825 750	825 750
Fan CFM (High)	2140	2470	2470	3270	3670	3670	3670
Coil Face Area (ft^2)	14.47	14.47	14.47	24.40	16.26	18.30	24.40
Coil Rows – fins per inch	1 – 25	1 – 25	1 – 25	1 – 25	2 – 20	2 – 20	2 – 20
Liquid Line Connection Size (in.)	3/8	3/8	3/8	3/8	3/8	3/8	3/8
Vapor Line Connection Size (in.)	5/8	5/8	3/4	3/4	7/8	7/8	7/8
Recommended Line Set Liquid Tube Diameter (in.)	3/8	3/8	3/8	3/8	3/8	3/8	3/8
Recommended Line Set Vapor Tube Diameter (in.)	5/8 *	5/8 *	3/4 *	3/4 *	7/8 *	7/8 *	1⅛ *
* Recommended Vapor Tube Line size is for standard installations. These recommendations may not apply to "Long Line" installations. When the total equivalent line length exceeds 80 feet or there is more than 20 feet vertical separation between indoor and outdoor units, consult the Long Line Application Guideline document before purchasing/installing line sets.							
Factory Charge R–22 (lbs.)	4.56	5.38	5.38	8.13	8.33	11.00	13.60
Required Subcooling (˚F)	10	9	11	9	9	12	13
Weight, shipping (lbs.)	202	206	206	264	280	300	314
Weight, operating (lbs.)	174	178	178	229	247	266	279

ELECTRICAL DATA (208/230–1–60, voltage range 197V – 253V)							
Model Size	**18**	**24**	**30**	**36**	**42**	**48**	**60**
Minimum Circuit Ampacity – **MCA** (amps)	11.7	18.3	18.3	19.5	23.8	26.6	33.1
Maximum OverCurrent Protective device – **MOCP** (amps)	20	30	30	30	40	40	50
Compressor **RLA** (Rated Load Amps) **LRA** (Locked Rotor Amps)	9.0 41.0	14.1 68.0	14.1 68.0	14.7 77.0	17.9 104.0	20.2 137.0	25.3 141.0
Fan Motor **FLA** (Full Load Amps)	0.5	0.7	0.7	1.1	1.4	1.4	1.4

R–22 COOLING CAPACITY LOSS FOR VARIOUS LINE LENGTHS & TUBE DIAMETERS

Model Size	Liquid Line (in.)	Acceptable Vapor Line Sizes (in.)	Cooling Capacity Loss (%) at Total Equivalent Line Length (ft.) Refer to Long Line Application Guideline to calculate equivalent length										
			Standard Application			Long Line Application (Requires Accessories) *							
			25’	50’	80’	81’	100’	125’	150’	175’	200’	225’	250’
18	3/8	5/8	1	1	2	2	3	3	4	5	5	6	7
		3/4	0	1	1	1	1	1	2	2	2	2	3
24		5/8	1	2	3	3	5	6	7	8	9	10	12
		3/4	0	1	1	1	2	2	3	3	3	4	4
		7/8	0	0	1	1	1	1	1	2	2	2	2
30		5/8	2	3	5	5	7	9	10	12	14	16	17
		3/4	1	1	2	2	3	3	4	5	5	6	7
		7/8	0	1	1	1	1	2	2	2	3	3	3
36		3/4	1	2	3	3	4	5	5	6	7	8	9
		7/8	1	1	1	1	2	2	3	3	4	4	5
42		3/4	1	2	4	4	5	6	7	8	10	11	12
		7/8	1	1	2	2	2	3	4	4	5	5	6
		1 1/8	0	0	1	1	1	1	1	1	1	2	2
48		3/4	2	3	5	5	6	8	9	11	12	14	15
		7/8	1	2	2	2	3	4	5	5	6	7	8
		1 1/8	0	0	1	1	1	1	1	2	2	2	2
60		7/8	1	2	3	3	5	6	7	8	9	10	11
		1 1/8	0	1	1	1	1	2	2	2	3	3	3

* Applications are considered “Long Line” if the total equivalent tubing length exceeds 80 feet or there is more than 20 foot vertical separation between indoor and outdoor units). These applications require additional accessories and system modifications for reliable system operation. Refer to the Long Line Application Guideline document for required piping and system modifications. Refer to Accessory Usage Guidelines below for required accessories.

Applications in this shaded area may have height restrictions that limit allowable total equivalent length when outdoor unit is below indoor unit. Refer to the Long Line Application Guideline document for instructions.

The maximum allowable total equivalent length is 250 feet.

ACCESSORY USAGE GUIDELINES

Accessory	REQUIRED FOR LOW–AMBIENT APPLICATIONS (Below 55° F)	REQUIRED FOR LONG LINE APPLICATIONS* (Over 80 Ft.)
Crankcase Heater	**Yes**	**Yes**
Evaporator Freeze Thermostat	**Yes**	No
Winter Start Control	**Yes**	No
Hard Start Kit	**Yes**	**Yes**
Low Ambient Kit (Pressure Switch)	**Yes**	No
Support Feet, 4” tall	Recommended	No
Liquid Line Solenoid Valve	No	See Long Line Application Guideline

* For Line Set lengths between 80 and 200 ft horizontal, or more than 20 ft indoor–outdoor vertical separation, refer to the Long Line Application Guideline document.

ACCESSORIES		
Part Number	**Description**	**Used On Model Size**
NASA001CH	Crankcase Heater for Scroll Compressor (208/230 V)	42 (factory installed on 48, 60)
NASA003CH	Crankcase Heater for Scroll Compressor (208/230 V Star Body)	18, 24, 30, 36
NASA001SC	Start Component – PTC Device	ALL
NASA001FS	Evaporator Freeze Thermostat	ALL
NASA201LS	Liquid Line Solenoid Valve, R–22	ALL
NASA001TD	Time Delay Relay, Indoor Blower	ALL
NASA001WS	Winter Start Control	ALL
NASA001AC	Anti–Cycle Timer (5 minute delay)	ALL
NASA003SC	Hard Start Kit (Capacitor & Relay)	18, 36, 42, 48, 60
NASA005SC	Hard Start Kit (Capacitor & Relay)	24, 30
NASA201LA	Low Ambient Kit (Pressure Switch), R–22	ALL
NASA001SF	Support Feet, 4” tall	ALL
AMF153TKB	TXV Kit, R–22 (converts R–22 piston coils to R–22 TXV)	18, 24, 30, 36
AMF355TKB	TXV Kit, R–22 (converts R–22 piston coils to R–22 TXV)	42, 48, 60

COOLING PERFORMANCE FOR COMBINATION RATINGS
Current Indoor Models

Outdoor Model	Current Indoor Model (‡ tested combo)	Furnace Model	Factory Installed	Cooling (95 °F)			SEER			
				BTU/hr	S/T	EER	factory	w/ field TDR	w/ field R-22 TXV	w/ field R-22 TXV + TDR
T2A318GKA	EB*2X18B**		TXV	17,300	0.78	11.00		13.00		
	EB*2X18B**	MV08B15****	TDR & TXV	17,700	0.78	11.50	14.00			
	EB*2X24B**		TXV	17,900	0.78	11.20		13.50		
	EB*2X24B**	MV08B15****	TDR & TXV	18,200	0.78	11.50	14.00			
	EB*2X24F**		TXV	17,900	0.78	11.20		13.50		
	EB*2X24F**	MV12F19****	TDR & TXV	18,200	0.78	11.50	14.00			
	‡ ED*2X18B**		TXV	17,500	0.78	11.00		13.00		
	ED*2X18B**	MV08B15****	TDR & TXV	17,700	0.78	11.70	14.00			
	ED*2X24B**		TXV	18,100	0.78	11.20		13.50		
	ED*2X24B**	MV08B15****	TDR & TXV	18,400	0.78	12.00	14.00			
	ED*2X24F**		TXV	18,100	0.78	11.20		13.50		
	ED*2X24F**	MV12F19****	TDR & TXV	18,400	0.78	12.50	14.00			
	EHD2X24A**		TXV	18,100	0.78	11.20		13.50		
	EHD2X24A**	*9MPV050	TDR & TXV	18,400	0.78	12.00	14.00			
	EHD2X24A**	*9MPV075	TDR & TXV	18,400	0.78	12.00	14.00			
	EHD2X24A**	MV08B15****	TDR & TXV	18,400	0.78	12.50	14.00			
	EHD2X24A**	MV12F19****	TDR & TXV	18,400	0.78	12.00	14.00			
	EMA2X24D**		TXV	18,100	0.78	11.20		13.50		
	FEM2X18****		TDR & TXV	18,300	0.78	11.70	14.00			
	FEM2X24****		TDR & TXV	18,500	0.78	12.00	14.00			
	FS(M,U)2X18****		TDR & TXV	17,800	0.78	11.00	13.20			
	FS(M,U)2X24****		TDR & TXV	18,100	0.78	11.00	13.20			
	FSA2X18****		TDR & TXV	18,000	0.78	11.00	13.20			
	FSA2X24****		TDR & TXV	18,300	0.78	11.20	13.50			
T2A324GKA	EB*2X24B**		TXV	23,800	0.73	11.00		13.00		
	EB*2X24B**	*8MPV050	TDR & TXV	24,200	0.73	11.20	13.50			
	EB*2X24B**	MV08B15****	TDR & TXV	24,200	0.73	11.50	14.00			
	EB*2X24F**		TXV	23,800	0.73	11.00		13.00		
	EB*2X24F**	*9MPV050	TDR & TXV	24,200	0.73	11.20	13.50			
	EB*2X24F**	*9MPV075	TDR & TXV	24,200	0.73	11.20	13.50			
	EB*2X24F**	MV12F19****	TDR & TXV	24,600	0.73	11.50	14.00			
	EB*2X30B**		TXV	24,000	0.73	11.00		13.00		
	EB*2X30B**	*8MPV050	TDR & TXV	24,400	0.73	11.20	13.50			
	EB*2X30B**	MV08B15****	TDR & TXV	24,600	0.73	11.50	14.00			
	EB*2X30F**		TXV	24,000	0.73	11.00		13.00		
	EB*2X30F**	*9MPV050	TDR & TXV	24,400	0.73	11.20	13.50			
	EB*2X30F**	*9MPV075	TDR & TXV	24,400	0.73	11.20	13.50			
	EB*2X30F**	MV12F19****	TDR & TXV	24,800	0.73	11.50	14.00			
	‡ ED*2X24B**		TXV	24,000	0.73	11.00		13.00		
	ED*2X24B**	*8MPV050	TDR & TXV	24,400	0.73	11.20	13.50			
	ED*2X24B**	MV08B15****	TDR & TXV	24,400	0.73	11.50	14.00			
	ED*2X24F**		TXV	24,000	0.73	11.00		13.00		
	ED*2X24F**	*8MPV075	TDR & TXV	24,800	0.73	11.20	13.50			
	ED*2X24F**	*9MPV050	TDR & TXV	24,400	0.73	11.20	13.50			
	ED*2X24F**	*9MPV075	TDR & TXV	24,400	0.73	11.20	13.50			
	ED*2X24F**	MV12F19****	TDR & TXV	24,800	0.73	11.50	14.00			
	ED*2X30B**		TXV	24,200	0.73	11.00		13.00		
	ED*2X30B**	*8MPV050	TDR & TXV	24,400	0.73	11.20	13.50			
	ED*2X30B**	MV08B15****	TDR & TXV	24,800	0.73	11.50	14.00			
	ED*2X30F**		TXV	24,200	0.73	11.00		13.00		
	ED*2X30F**	*9MPV050	TDR & TXV	24,600	0.73	11.20	13.50			
	ED*2X30F**	*9MPV075	TDR & TXV	24,600	0.73	11.20	13.50			
	ED*2X30F**	MV12F19****	TDR & TXV	25,000	0.73	11.50	14.00			
	EHD2X24A**		TXV	24,400	0.73	11.00		13.00		
	EHD2X24A**	*8MPV050	TDR & TXV	24,600	0.73	11.20	13.50			
	EHD2X24A**	*8MPV075	TDR & TXV	25,000	0.73	11.20	13.50			
	EHD2X24A**	*8MPV100	TDR & TXV	25,000	0.73	11.50	14.00			
	EHD2X24A**	*8MPV125	TDR & TXV	25,000	0.73	11.50	14.00			
	EHD2X24A**	*9MPV050	TDR & TXV	24,600	0.73	11.20	13.50			
	EHD2X24A**	*9MPV075	TDR & TXV	24,400	0.73	11.20	13.50			
	EHD2X24A**	*9MPV100	TDR & TXV	24,800	0.73	11.20	13.50			
	EHD2X24A**	MV08B15****	TDR & TXV	25,000	0.73	11.50	14.00			
	EHD2X24A**	MV12F19****	TDR & TXV	25,200	0.73	11.50	14.00			
	EHD2X24A**	MV16J22****	TDR & TXV	24,800	0.73	11.50	14.00			
	EHD2X24A**	MV20N26****	TDR & TXV	25,200	0.73	11.70	14.00			

– continued on next page –

COOLING PERFORMANCE FOR COMBINATION RATINGS (continued)
Current Indoor Models

Outdoor Model	Current Indoor Model (‡ tested combo)	Furnace Model	Factory Installed	Cooling (95 °F)			SEER			
				BTU/hr	S/T	EER	factory	w/ field TDR	w/ field R-22 TXV	w/ field R-22 TXV + TDR
T2A324GKA (continued)	EHD2X30A**		TXV	24,400	0.73	11.00		13.00		
	EHD2X30A**	*8MPV050	TDR & TXV	24,600	0.73	11.20	13.50			
	EHD2X30A**	*8MPV075	TDR & TXV	25,200	0.73	11.20	13.50			
	EHD2X30A**	*8MPV100	TDR & TXV	25,400	0.73	11.50	14.00			
	EHD2X30A**	*8MPV125	TDR & TXV	25,200	0.73	11.50	14.00			
	EHD2X30A**	*9MPV050	TDR & TXV	24,800	0.73	11.20	13.50			
	EHD2X30A**	*9MPV075	TDR & TXV	24,600	0.73	11.20	13.50			
	EHD2X30A**	*9MPV100	TDR & TXV	25,000	0.73	11.50	14.00			
	EHD2X30A**	MV08B15****	TDR & TXV	25,200	0.73	11.50	14.00			
	EHD2X30A**	MV12F19****	TDR & TXV	25,000	0.73	11.50	14.00			
	EHD2X30A**	MV16J22****	TDR & TXV	25,200	0.73	11.70	14.00			
	EHD2X30A**	MV20N26****	TDR & TXV	24,800	0.73	11.70	14.00			
	FEM2X24****		TDR & TXV	24,200	0.73	11.20	13.50			
	FEM2X30****		TDR & TXV	24,400	0.73	11.50	14.00			
	FS(M,U)2X24****		TDR & TXV	23,800	0.73	11.00	13.00			
	FS(M,U)2X30****		TDR & TXV	24,000	0.73	11.00	13.00			
	FSA2X24****		TDR & TXV	24,400	0.73	11.00	13.00			
	FSA2X30****		TDR & TXV	25,200	0.73	11.00	13.00			
T2A330GKA	EB*2X30B**		TXV	29,800	0.79	11.00		13.00		
	EB*2X30B**	*8MPV050	TDR & TXV	29,800	0.79	11.00	13.20			
	EB*2X30B**	MV08B15****	TDR & TXV	30,200	0.79	11.50	14.00			
	EB*2X30F**		TXV	29,800	0.79	11.00		13.20		
	EB*2X30F**	*8MPV075	TDR & TXV	30,400	0.79	11.50	14.00			
	EB*2X30F**	*9MPV050	TDR & TXV	30,000	0.79	11.20	13.50			
	EB*2X30F**	*9MPV075	TDR & TXV	30,200	0.79	11.20	13.50			
	EB*2X30F**	MV12F19****	TDR & TXV	30,600	0.79	11.70	14.00			
	EB*2X36B**		TXV	30,000	0.79	11.00		13.00		
	EB*2X36B**	*8MPV050	TDR & TXV	30,000	0.79	11.20	13.50			
	EB*2X36B**	MV08B15****	TDR & TXV	30,400	0.79	11.70	14.00			
	EB*2X36F**		TXV	30,000	0.79	11.00		13.00		
	EB*2X36F**	*8MPV075	TDR & TXV	30,600	0.79	11.50	14.00			
	EB*2X36F**	*9MPV050	TDR & TXV	30,200	0.79	11.20	13.50			
	EB*2X36F**	*9MPV075	TDR & TXV	30,400	0.79	11.20	13.50			
	EB*2X36F**	MV12F19****	TDR & TXV	30,600	0.79	11.70	14.00			
	EB*2X36J**		TXV	30,000	0.79	11.00		13.00		
	EB*2X36J**	*8MPV100	TDR & TXV	30,800	0.79	11.70	14.00			
	EB*2X36J**	*8MPV125	TDR & TXV	30,800	0.79	11.70	14.00			
	EB*2X36J**	*9MPV100	TDR & TXV	30,800	0.79	11.50	14.00			
	EB*2X36J**	MV16J22****	TDR & TXV	30,800	0.79	12.00	14.00			
	‡ ED*2X30B**		TXV	30,000	0.79	11.00		13.00		
	ED*2X30B**	*8MPV050	TDR & TXV	30,000	0.79	11.00	13.20			
	ED*2X30B**	MV08B15****	TDR & TXV	30,400	0.79	11.70	14.00			
	ED*2X30F**		TXV	30,000	0.79	11.00		13.20		
	ED*2X30F**	*8MPV075	TDR & TXV	30,600	0.79	11.50	14.00			
	ED*2X30F**	*9MPV050	TDR & TXV	30,200	0.79	11.20	13.50			
	ED*2X30F**	*9MPV075	TDR & TXV	30,400	0.79	11.20	13.50			
	ED*2X30F**	MV12F19****	TDR & TXV	30,800	0.79	11.70	14.00			
	ED*2X36B**		TXV	30,200	0.79	11.00		13.20		
	ED*2X36B**	*8MPV050	TDR & TXV	30,200	0.79	11.20	13.50			
	ED*2X36B**	MV08B15****	TDR & TXV	30,600	0.79	11.70	14.00			
	ED*2X36F**		TXV	30,200	0.79	11.00		13.00		
	ED*2X36F**	*8MPV075	TDR & TXV	30,800	0.79	11.50	14.00			
	ED*2X36F**	*9MPV050	TDR & TXV	30,400	0.79	11.20	13.50			
	ED*2X36F**	*9MPV075	TDR & TXV	30,600	0.79	11.20	13.50			
	ED*2X36F**	MV12F19****	TDR & TXV	30,800	0.79	11.70	14.00			
	ED*2X36J**		TXV	30,200	0.79	11.00		13.20		
	ED*2X36J**	*8MPV100	TDR & TXV	30,600	0.79	11.70	14.00			
	ED*2X36J**	*8MPV125	TDR & TXV	30,600	0.79	11.70	14.00			
	ED*2X36J**	*9MPV100	TDR & TXV	30,600	0.79	11.50	14.00			
	ED*2X36J**	MV16J22****	TDR & TXV	30,600	0.79	12.00	14.00			
	EHD2X30A**		TXV	30,000	0.79	11.00		13.20		
	EHD2X30A**	*8MPV050	TDR & TXV	30,000	0.79	11.20	13.50			
	EHD2X30A**	*8MPV075	TDR & TXV	30,600	0.79	11.50	14.00			
	EHD2X30A**	*8MPV100	TDR & TXV	30,600	0.79	11.50	14.00			
	EHD2X30A**	*8MPV125	TDR & TXV	30,600	0.79	11.70	14.00			
	EHD2X30A**	*9MPV050	TDR & TXV	30,400	0.79	11.20	13.50			

– continued on next page –

COOLING PERFORMANCE FOR COMBINATION RATINGS (continued)
Current Indoor Models

Outdoor Model	Current Indoor Model (‡ tested combo)	Furnace Model	Factory Installed	Cooling (95 °F)			SEER			
				BTU/hr	S/T	EER	factory	w/ field TDR	w/ field R-22 TXV	w/ field R-22 TXV + TDR
T2A330GKA (continued)	EHD2X30A**	*9MPV075	TDR & TXV	30,600	0.79	11.20	13.50			
	EHD2X30A**	*9MPV100	TDR & TXV	30,600	0.79	11.50	14.00			
	EHD2X30A**	*9MPV125	TDR & TXV	30,600	0.79	11.50	14.00			
	EHD2X30A**	MV08B15****	TDR & TXV	30,600	0.79	11.70	14.00			
	EHD2X30A**	MV12F19****	TDR & TXV	30,600	0.79	11.70	14.00			
	EHD2X30A**	MV16J22****	TDR & TXV	30,600	0.79	11.70	14.00			
	EHD2X30A**	MV20N26****	TDR & TXV	30,600	0.79	12.00	14.00			
	EHD2X36A**		TXV	30,200	0.79	11.20		13.50		
	EHD2X36A**	*8MPV050	TDR & TXV	31,000	0.79	11.20	13.50			
	EHD2X36A**	*8MPV075	TDR & TXV	31,000	0.79	11.70	14.00			
	EHD2X36A**	*8MPV100	TDR & TXV	31,000	0.79	11.70	14.00			
	EHD2X36A**	*8MPV125	TDR & TXV	31,000	0.79	12.00	14.00			
	EHD2X36A**	*9MPV050	TDR & TXV	30,800	0.79	11.20	13.50			
	EHD2X36A**	*9MPV075	TDR & TXV	31,000	0.79	11.50	14.00			
	EHD2X36A**	*9MPV100	TDR & TXV	31,000	0.79	11.70	14.00			
	EHD2X36A**	MV08B15****	TDR & TXV	31,000	0.79	11.70	14.00			
	EHD2X36A**	MV12F19****	TDR & TXV	31,000	0.79	12.00	14.00			
	EHD2X36A**	MV16J22****	TDR & TXV	31,000	0.79	12.00	14.00			
	EHD2X36A**	MV20N26****	TDR & TXV	31,000	0.79	12.00	14.00			
	EMA2X36D**		TXV	30,000	0.79	11.00		13.20		
	FEM2X30****		TDR & TXV	30,200	0.79	11.50	14.00			
	FEM2X36****		TDR & TXV	31,000	0.79	11.70	14.00			
	FS(M,U)2X30****		TDR & TXV	29,800	0.79	11.00	13.20			
	FSA2X30****		TDR & TXV	29,800	0.79	11.00	13.20			
	FSA2X36****		TDR & TXV	30,200	0.79	11.20	13.50			
	FSM2X36****		TDR & TXV	30,600	0.79	11.20	13.50			
	FSU2X36****		TDR & TXV	30,000	0.79	11.00	13.20			
T2A336GKA	EB*2X36B**		TXV	35,400	0.76	11.00		13.00		
	EB*2X36B**	MV08B15****	TDR & TXV	36,000	0.76	11.20	13.50			
	EB*2X36F**		TXV	35,800	0.76	11.00		13.00		
	EB*2X36F**	*8MPV075	TDR & TXV	36,200	0.76	11.20	13.50			
	EB*2X36F**	*9MPV075	TDR & TXV	36,000	0.76	11.00	13.00			
	EB*2X36F**	MV12F19****	TDR & TXV	36,600	0.76	11.50	14.00			
	EB*2X36J**		TXV	35,800	0.76	11.00		13.00		
	EB*2X36J**	*8MPV100	TDR & TXV	36,600	0.76	11.50	14.00			
	EB*2X36J**	*8MPV125	TDR & TXV	36,600	0.76	11.50	14.00			
	EB*2X36J**	*9MPV100	TDR & TXV	36,600	0.76	11.20	13.50			
	EB*2X36J**	MV16J22****	TDR & TXV	36,800	0.76	11.70	14.00			
	EB*2X42J**		TXV	36,200	0.76	11.00		13.00		
	EB*2X42J**	*8MPV100	TDR & TXV	37,000	0.76	11.50	14.00			
	EB*2X42J**	*8MPV125	TDR & TXV	37,000	0.76	11.50	14.00			
	EB*2X42J**	*9MPV100	TDR & TXV	36,800	0.76	11.20	13.50			
	EB*2X42J**	MV16J22****	TDR & TXV	37,200	0.76	11.70	14.00			
	EB*2X42L**		TXV	36,200	0.76	11.00		13.00		
	EB*2X42L**	*9MPV125	TDR & TXV	37,000	0.76	11.20	13.50			
	ED*2X36B**		TXV	35,600	0.76	11.00		13.00		
	ED*2X36B**	*8MPV050	TDR & TXV	35,400	0.76	11.00	13.00			
	ED*2X36B**	MV08B15****	TDR & TXV	36,200	0.76	11.20	13.50			
	‡ ED*2X36F**		TXV	36,000	0.76	11.00		13.00		
	ED*2X36F**	*8MPV075	TDR & TXV	36,400	0.76	11.20	13.50			
	ED*2X36F**	*9MPV075	TDR & TXV	36,200	0.76	11.00	13.00			
	ED*2X36F**	MV12F19****	TDR & TXV	36,800	0.76	11.50	14.00			
	ED*2X36J**		TXV	36,000	0.76	11.00		13.00		
	ED*2X36J**	*8MPV100	TDR & TXV	36,800	0.76	11.50	14.00			
	ED*2X36J**	*8MPV125	TDR & TXV	36,800	0.76	11.50	14.00			
	ED*2X36J**	*9MPV100	TDR & TXV	36,800	0.76	11.20	13.50			
	ED*2X36J**	MV16J22****	TDR & TXV	37,000	0.76	11.70	14.00			
	ED*2X42J**		TXV	36,600	0.76	11.00		13.00		
	ED*2X42J**	*8MPV100	TDR & TXV	37,200	0.76	11.50	14.00			
	ED*2X42J**	*8MPV125	TDR & TXV	37,200	0.76	11.50	14.00			
	ED*2X42J**	*9MPV100	TDR & TXV	37,000	0.76	11.20	13.50			
	ED*2X42J**	MV16J22****	TDR & TXV	37,400	0.76	11.70	14.00			
	ED*2X42L**		TXV	36,600	0.76	11.00		13.00		
	ED*2X42L**	*9MPV125	TDR & TXV	37,200	0.76	11.20	13.50			
	EHD2X36A**		TXV	35,600	0.76	11.00		13.20		
	EHD2X36A**	*8MPV075	TDR & TXV	36,400	0.76	11.20	13.50			

– continued on next page –

COOLING PERFORMANCE FOR COMBINATION RATINGS (continued)
Current Indoor Models

Outdoor Model	Current Indoor Model (‡ tested combo)	Furnace Model	Factory Installed	Cooling (95 °F)			SEER			
				BTU/hr	S/T	EER	factory	w/ field TDR	w/ field R-22 TXV	w/ field R-22 TXV + TDR
T2A336GKA (continued)	EHD2X36A**	*8MPV100	TDR & TXV	36,800	0.76	11.50	14.00			
	EHD2X36A**	*8MPV125	TDR & TXV	36,800	0.76	11.50	14.00			
	EHD2X36A**	*9MPV050	TDR & TXV	35,400	0.76	11.20	13.50			
	EHD2X36A**	*9MPV075	TDR & TXV	36,200	0.76	11.20	13.50			
	EHD2X36A**	MV08B15****	TDR & TXV	36,200	0.76	11.50	13.50			
	EHD2X36A**	MV12F19****	TDR & TXV	36,800	0.76	11.50	14.00			
	EHD2X42A**		TXV	36,600	0.76	11.00		13.00		
	EHD2X42A**	*8MPV050	TDR & TXV	36,800	0.76	11.20	13.50			
	EHD2X42A**	*8MPV075	TDR & TXV	37,200	0.76	11.20	13.50			
	EHD2X42A**	*8MPV100	TDR & TXV	37,200	0.76	11.50	14.00			
	EHD2X42A**	*8MPV125	TDR & TXV	37,200	0.76	11.70	14.00			
	EHD2X42A**	*9MPV050	TDR & TXV	36,800	0.76	11.20	13.50			
	EHD2X42A**	*9MPV075	TDR & TXV	37,000	0.76	11.20	13.50			
	EHD2X42A**	MV08B15****	TDR & TXV	37,400	0.76	11.50	14.00			
	EHD2X42A**	MV12F19****	TDR & TXV	37,400	0.76	11.70	14.00			
	EHD2X42A**	MV16J22****	TDR & TXV	37,600	0.76	12.00	14.00			
	EHD2X42A**	MV20N26****	TDR & TXV	37,800	0.76	12.00	14.00			
	EMA2X36D**		TXV	35,600	0.76	11.00		13.00		
	FEM2X36****		TDR & TXV	37,200	0.76	11.50	14.00			
	FEM2X42****		TDR & TXV	37,400	0.76	11.50	14.00			
	FS(M,U)2X42****		TDR & TXV	36,800	0.76	11.00	13.20			
	FSA2X36****		TDR & TXV	36,000	0.76	11.00	13.00			
	FSM2X36****		TDR & TXV	36,800	0.76	11.00	13.20			
	FSU2X36****		TDR & TXV	36,000	0.76	11.00	13.00			
T2A342GKA	EB*2X42J**		TXV	41,500	0.75	11.00		13.00		
	EB*2X42J**	*8MPV100	TDR & TXV	41,500	0.75	11.20	13.50			
	EB*2X42J**	*8MPV125	TDR & TXV	41,500	0.75	11.20	13.50			
	EB*2X42J**	*9MPV100	TDR & TXV	41,500	0.75	11.00	13.20			
	EB*2X42J**	MV16J22****	TDR & TXV	41,500	0.75	11.50	14.00			
	EB*2X42L**		TXV	41,500	0.75	11.00		13.00		
	EB*2X42L**	*9MPV125	TDR & TXV	41,500	0.75	11.20	13.50			
	EB*2X48F**		TXV	42,500	0.75	11.00		13.20		
	EB*2X48F**	*8MPV075	TDR & TXV	42,000	0.75	11.20	13.50			
	EB*2X48F**	*9MPV075	TDR & TXV	41,500	0.75	11.00	13.20			
	EB*2X48J**		TXV	42,500	0.75	11.00		13.20		
	EB*2X48J**	*8MPV100	TDR & TXV	43,000	0.75	11.20	13.50			
	EB*2X48J**	*8MPV125	TDR & TXV	43,000	0.75	11.20	13.50			
	EB*2X48J**	*9MPV100	TDR & TXV	42,500	0.75	11.20	13.50			
	EB*2X48J**	MV16J22****	TDR & TXV	43,000	0.75	11.50	14.00			
	EB*2X48L**		TXV	42,500	0.75	11.00		13.20		
	EB*2X48L**	*9MPV125	TDR & TXV	42,500	0.75	11.20	13.50			
	‡ ED*2X42J**		TXV	41,500	0.75	11.00		13.00		
	ED*2X42J**	*8MPV100	TDR & TXV	41,500	0.75	11.20	13.50			
	ED*2X42J**	*8MPV125	TDR & TXV	42,000	0.75	11.20	13.50			
	ED*2X42J**	*9MPV100	TDR & TXV	42,000	0.75	11.00	13.20			
	ED*2X42J**	MV16J22****	TDR & TXV	42,500	0.75	11.50	14.00			
	ED*2X42L**		TXV	41,500	0.75	11.00		13.00		
	ED*2X42L**	*9MPV125	TDR & TXV	41,500	0.75	11.20	13.50			
	ED*2X48F**		TXV	42,500	0.75	11.00		13.20		
	ED*2X48F**	*8MPV075	TDR & TXV	42,500	0.75	11.20	13.50			
	ED*2X48F**	*9MPV075	TDR & TXV	42,000	0.75	11.00	13.20			
	ED*2X48J**		TXV	42,500	0.75	11.00		13.20		
	ED*2X48J**	*8MPV100	TDR & TXV	43,000	0.75	11.20	13.50			
	ED*2X48J**	*8MPV125	TDR & TXV	43,000	0.75	11.20	13.50			
	ED*2X48J**	*9MPV100	TDR & TXV	42,500	0.75	11.20	13.50			
	ED*2X48J**	MV16J22****	TDR & TXV	43,000	0.75	11.50	14.00			
	ED*2X48L**		TXV	42,500	0.75	11.00		13.20		
	ED*2X48L**	*9MPV125	TDR & TXV	42,500	0.75	11.20	13.50			
	EHD2X42A**		TXV	42,500	0.75	11.00		13.20		
	EHD2X42A**	*8MPV075	TDR & TXV	42,500	0.75	11.20	13.50			
	EHD2X42A**	*8MPV100	TDR & TXV	43,000	0.75	11.20	13.50			
	EHD2X42A**	*8MPV125	TDR & TXV	43,000	0.75	11.20	13.50			
	EHD2X42A**	*9MPV075	TDR & TXV	42,000	0.75	11.00	13.20			
	EHD2X42A**	*9MPV100	TDR & TXV	42,500	0.75	11.20	13.50			
	EHD2X42A**	*9MPV125	TDR & TXV	42,500	0.75	11.20	13.50			
	EHD2X42A**	MV16J22****	TDR & TXV	43,500	0.75	11.50	14.00			

– continued on next page –

COOLING PERFORMANCE FOR COMBINATION RATINGS (continued)
Current Indoor Models

Outdoor Model	Current Indoor Model (‡ tested combo)	Furnace Model	Factory Installed	Cooling (95 °F)			SEER			
				BTU/hr	S/T	EER	factory	w/ field TDR	w/ field R-22 TXV	w/ field R-22 TXV + TDR
T2A342GKA (continued)	EHD2X42A**	MV20N26****	TDR & TXV	44,000	0.75	11.50	14.00			
	EHD2X48A**		TXV	43,000	0.75	11.00		13.20		
	EHD2X48A**	*8MPV075	TDR & TXV	43,000	0.75	11.20	13.50			
	EHD2X48A**	*8MPV100	TDR & TXV	43,500	0.75	11.20	13.50			
	EHD2X48A**	*8MPV125	TDR & TXV	43,000	0.75	11.50	14.00			
	EHD2X48A**	*9MPV075	TDR & TXV	42,000	0.75	11.20	13.50			
	EHD2X48A**	*9MPV100	TDR & TXV	43,000	0.75	11.20	13.50			
	EHD2X48A**	*9MPV125	TDR & TXV	43,000	0.75	11.50	14.00			
	EHD2X48A**	MV16J22****	TDR & TXV	43,500	0.75	11.70	14.00			
	EHD2X48A**	MV20N26****	TDR & TXV	43,000	0.75	11.70	14.00			
	EMA2X48D**		TXV	42,000	0.75	11.00		13.00		
	FEM2X42****		TDR & TXV	42,500	0.75	11.20	13.50			
	FEM2X48****		TDR & TXV	43,500	0.75	11.70	14.00			
	FS(M,U)2X42****		TDR & TXV	42,500	0.75	11.00	13.00			
	FS(M,U)2X48****		TDR & TXV	43,000	0.75	11.00	13.20			
T2A348GKA	EB*2X48F**		TXV	46,500	0.76	11.00		13.00		
	EB*2X48J**		TXV	47,000	0.76	11.00		13.00		
	EB*2X48J**	*8MPV100	TDR & TXV	47,000	0.76	11.00	13.00			
	EB*2X48J**	*8MPV125	TDR & TXV	46,500	0.76	11.20	13.50			
	EB*2X48J**	*9MPV100	TDR & TXV	45,500	0.76	11.00	13.20			
	EB*2X48J**	MV16J22****	TDR & TXV	46,500	0.76	11.50	14.00			
	EB*2X48L**		TXV	47,000	0.76	11.00		13.00		
	EB*2X48L**	*9MPV125	TDR & TXV	46,500	0.76	11.00	13.20			
	EB*2X60J**		TXV	48,000	0.76	11.00		13.20		
	EB*2X60J**	*8MPV100	TDR & TXV	48,000	0.76	11.20	13.50			
	EB*2X60J**	*8MPV125	TDR & TXV	48,500	0.76	11.20	13.50			
	EB*2X60J**	*9MPV100	TDR & TXV	47,000	0.76	11.20	13.50			
	EB*2X60J**	MV16J22****	TDR & TXV	48,000	0.76	11.50	14.00			
	EB*2X60L**		TXV	48,000	0.76	11.00		13.20		
	EB*2X60L**	*9MPV125	TDR & TXV	48,000	0.76	11.20	13.50			
	ED*2X48F**		TXV	46,500	0.76	11.00		13.00		
	‡ ED*2X48J**		TXV	47,000	0.76	11.00		13.00		
	ED*2X48J**	*8MPV100	TDR & TXV	47,000	0.76	11.00	13.00			
	ED*2X48J**	*8MPV125	TDR & TXV	46,500	0.76	11.20	13.50			
	ED*2X48J**	*9MPV100	TDR & TXV	45,500	0.76	11.00	13.20			
	ED*2X48J**	MV16J22****	TDR & TXV	47,500	0.76	11.20	13.50			
	ED*2X48L**		TXV	47,000	0.76	11.00		13.00		
	ED*2X48L**	*9MPV125	TDR & TXV	46,500	0.76	11.00	13.20			
	ED*2X60J**		TXV	48,000	0.76	11.00		13.20		
	ED*2X60J**	*8MPV100	TDR & TXV	48,000	0.76	11.00	13.50			
	ED*2X60J**	*8MPV125	TDR & TXV	48,000	0.76	11.50	14.00			
	ED*2X60J**	*9MPV100	TDR & TXV	48,000	0.76	11.00	13.20			
	ED*2X60J**	MV16J22****	TDR & TXV	49,000	0.76	11.50	14.00			
	ED*2X60L**		TXV	48,000	0.76	11.00		13.20		
	ED*2X60L**	*9MPV125	TDR & TXV	48,000	0.76	11.20	13.50			
	EHD2X48A**		TXV	46,500	0.76	11.00		13.00		
	EHD2X48A**	*8MPV100	TDR & TXV	47,000	0.76	11.20	13.50			
	EHD2X48A**	*8MPV125	TDR & TXV	46,500	0.76	11.20	13.50			
	EHD2X48A**	*9MPV100	TDR & TXV	45,500	0.76	11.20	13.20			
	EHD2X48A**	*9MPV125	TDR & TXV	46,000	0.76	11.00	13.20			
	EHD2X48A**	MV16J22****	TDR & TXV	47,500	0.76	11.20	13.50			
	EHD2X48A**	MV20N26****	TDR & TXV	47,500	0.76	11.20	13.50			
	EHD2X60A**		TXV	48,000	0.76	11.00		13.20		
	EHD2X60A**	*8MPV100	TDR & TXV	48,000	0.76	11.20	13.50			
	EHD2X60A**	*8MPV125	TDR & TXV	49,000	0.76	11.20	13.50			
	EHD2X60A**	*9MPV100	TDR & TXV	48,000	0.76	11.00	13.20			
	EHD2X60A**	*9MPV125	TDR & TXV	48,000	0.76	11.20	13.50			
	EHD2X60A**	MV16J22****	TDR & TXV	49,000	0.76	11.50	14.00			
	EHD2X60A**	MV20N26****	TDR & TXV	49,000	0.76	11.50	14.00			
	EMA2X48D**		TXV	45,500	0.76	11.00		13.00		
	FEM2X48****		TDR & TXV	48,000	0.76	11.20	13.50			
	FEM2X60****		TDR & TXV	49,000	0.76	11.50	14.00			
	FS(M,U)2X48****		TDR & TXV	47,500	0.76	11.00	13.00			
	FS(M,U)2X60****		TDR & TXV	48,500	0.76	11.00	13.20			

– continued on next page –

COOLING PERFORMANCE FOR COMBINATION RATINGS (continued) Current Indoor Models										
Outdoor Model	Current Indoor Model (‡ tested combo)	Furnace Model	Factory Installed	Cooling (95 °F)			SEER			
				BTU/hr	S/T	EER	factory	w/ field TDR	w/ field R-22 TXV	w/ field R-22 TXV + TDR
T2A360GKA	EB*2X60J**		TXV	56,500	0.78	11.00		13.00		
	EB*2X60J**	*8MPV100	TDR & TXV	56,500	0.78	11.00	13.20			
	EB*2X60J**	*8MPV125	TDR & TXV	57,000	0.78	11.00	13.20			
	EB*2X60J**	*9MPV100	TDR & TXV	55,500	0.78	11.00	13.00			
	EB*2X60J**	MV16J22****	TDR & TXV	57,500	0.78	11.20	13.50			
	EB*2X60L**		TXV	57,500	0.78	11.00		13.00		
	EB*2X60L**	*9MPV125	TDR & TXV	55,500	0.78	11.00	13.20			
	ED*2X60J**		TXV	56,500	0.78	11.00		13.00		
	ED*2X60J**	*8MPV100	TDR & TXV	56,500	0.78	11.00	13.20			
	ED*2X60J**	*8MPV125	TDR & TXV	57,000	0.78	11.00	13.20			
	ED*2X60J**	*9MPV100	TDR & TXV	55,500	0.78	11.00	13.00			
	ED*2X60J**	MV16J22****	TDR & TXV	57,500	0.78	11.20	13.50			
	‡ ED*2X60L**		TXV	57,500	0.78	11.00		13.00		
	ED*2X60L**	*9MPV125	TDR & TXV	55,500	0.78	11.00	13.20			
	EHD2X60A**		TXV	57,500	0.78	11.00		13.00		
	EHD2X60A**	*8MPV100	TDR & TXV	56,500	0.78	11.00	13.20			
	EHD2X60A**	*8MPV125	TDR & TXV	57,000	0.78	11.00	13.20			
	EHD2X60A**	*9MPV100	TDR & TXV	56,000	0.78	11.00	13.00			
	EHD2X60A**	*9MPV125	TDR & TXV	56,000	0.78	11.00	13.20			
	EHD2X60A**	MV16J22****	TDR & TXV	58,000	0.78	11.20	13.50			
	EHD2X60A**	MV20N26****	TDR & TXV	58,000	0.78	11.20	13.50			
	FEM2X60****		TDR & TXV	58,000	0.78	11.00	13.20			
	FS(M,U)2X60****		TDR & TXV	56,500	0.78	11.00	13.00			

COOLING PERFORMANCE FOR COMBINATION RATINGS
Obsolete Indoor Models

Outdoor Model	Obsolete Indoor Model	Furnace Model	Factory Installed	Cooling (95 °F)			SEER			
				BTU/hr	S/T	EER	factory	w/ field TDR	w/ field R-22 TXV	w/ field R-22 TXV + TDR
T2A318GKA	EBP18****		TDR	17,000	0.78	11.45			12.55	
	EBP24****		TDR	18,100	0.78	11.20			13.50	
	EBV24****		TDR & TXV	18,800	0.78	12.50	14.00			
	EBV36****		TDR & TXV	18,500	0.78	11.50	14.00			
	EBX18****		TDR & TXV	17,300	0.78	11.20	13.50			
	EL*18B****		NONE	15,700	0.78	10.35				11.30
	EL*18B****	MV08B15****	TDR	15,900	0.78	11.00			13.00	
	EL*24B****		NONE	16,700	0.78	11.25				12.30
	EL*24B****	MV08B15****	TDR	17,100	0.78	11.50			14.00	
	EMH24F****		NONE	16,700	0.78	11.25				12.30
	EP*18B****		NONE	15,700	0.78	10.45				11.40
	EP*18B****	MV08B15****	TDR	15,900	0.78	11.80			13.00	
	EP*24B****		NONE	16,700	0.78	11.25				12.60
	EP*24B****	MV08B15****	TDR	17,000	0.78	11.50			14.00	
	EP*24F****		NONE	16,700	0.78	11.25				12.30
	EP*24F****	MV12F19****	TDR	17,000	0.78	11.50			14.00	
	EPP024****		NONE	15,300	0.78	10.20				11.10
	EX*24B****		TXV	17,800	0.78	11.00		13.20		
	EX*24B****	MV08B15****	TDR & TXV	17,900	0.78	12.00	14.00			
	EX*24F****		TXV	17,800	0.78	11.00		13.20		
	EX*24F****	*9MPV050	TDR & TXV	18,500	0.78	11.70	14.00			
	EX*24F****	MV12F19****	TDR & TXV	17,900	0.78	12.00	14.00			
	FWM18****		TDR	17,100	0.78	11.00			13.00	
	FWM24****		TDR	18,000	0.78	11.00			13.20	
T2A324GKA	EBP24****		TDR	23,400	0.73	10.80			12.50	
	EBP30****		TDR	23,800	0.73	11.05			12.80	
	EBV24****		TDR & TXV	24,600	0.73	11.20	13.50			
	EBV36****		TDR & TXV	24,600	0.73	11.20	13.50			
	EBV48****		TDR & TXV	25,200	0.73	11.20	13.50			
	EBX18****		TDR & TXV	23,400	0.73	10.80	12.50			
	EBX24****		TDR & TXV	23,800	0.73	11.05	12.90			
	EL*24B****		NONE	22,000	0.73	10.30				11.75
	EL*24B****	*8MPV050	TDR	22,200	0.73	10.80			12.55	
	EL*30B****		NONE	22,400	0.73	10.35				12.00
	EMH24F****		NONE	22,000	0.73	10.30				11.75
	EMH30F****		NONE	22,400	0.73	10.35				12.00
	EP*24B****		NONE	22,000	0.73	10.20				11.75
	EP*24F****		NONE	22,000	0.73	10.20				11.75
	EP*30B****		NONE	22,400	0.73	10.35				12.00
	EP*30F****		NONE	22,400	0.73	10.35				12.00
	EPP030****		NONE	21,600	0.73	10.05				11.60
	EX*24B****		TXV	23,600	0.73	10.85		12.55		
	EX*24B****	*8MPV050	TDR & TXV	24,000	0.73	11.00	13.00			
	EX*24B****	MV08B15****	TDR & TXV	24,200	0.73	11.20	13.50			
	EX*24F****		TXV	23,600	0.73	10.85		12.55		
	EX*24F****	*8MPV075	TDR & TXV	24,200	0.73	11.00	13.20			
	EX*24F****	*9MPV050	TDR & TXV	24,200	0.73	11.00	13.00			
	EX*24F****	*9MPV075	TDR & TXV	24,200	0.73	11.00	13.20			
	EX*24F****	MV12F19****	TDR & TXV	24,400	0.73	11.20	13.50			
	FWM24****		TDR	23,200	0.73	10.60			12.30	
	FWM30****		TDR	23,800	0.73	10.90			12.60	
T2A330GKA	EBP30****		TDR	29,600	0.79	11.00			13.20	
	EBP36****		TDR	29,600	0.79	11.00			12.95	
	EBV24****		TDR & TXV	30,400	0.79	11.50	14.00			
	EBV36****		TDR & TXV	30,400	0.79	11.50	14.00			
	EBV48****		TDR & TXV	31,600	0.79	11.70	14.00			
	EL*30B****		NONE	27,800	0.79	10.55				12.40
	EL*30B****	*8MPV050	TDR	27,800	0.79	10.55			12.40	
	EL*30B****	MV08B15****	TDR	28,200	0.79	11.20			13.50	
	EL*36B****		NONE	29,000	0.79	10.95				12.85
	EL*36B****	*8MPV050	TDR	29,000	0.79	10.95			12.85	
	EL*36B****	MV08B15****	TDR	29,200	0.79	11.20			13.50	
	EL*36F****		NONE	29,000	0.79	10.95				12.85
	EL*36F****	*8MPV075	TDR	29,400	0.79	11.20			13.50	
	EL*36F****	MV12F19****	TDR	29,600	0.79	11.50			14.00	
	EMH30F****		NONE	27,800	0.79	10.85				12.40

– continued on next page –

COOLING PERFORMANCE FOR COMBINATION RATINGS (continued)
Obsolete Indoor Models

Outdoor Model	Obsolete Indoor Model	Furnace Model	Factory Installed	Cooling (95 °F)			SEER			
				BTU/hr	S/T	EER	factory	w/ field TDR	w/ field R-22 TXV	w/ field R-22 TXV + TDR
T2A330GKA (continued)	EMH36F****		NONE	29,000	0.79	10.95				12.85
	EP*30B****		NONE	27,800	0.79	10.55				12.40
	EP*30B****	*8MPV050	TDR	27,800	0.79	10.55			12.40	
	EP*30B****	MV08B15****	TDR	28,200	0.79	11.20			13.50	
	EP*30F****		NONE	27,800	0.79	10.55				12.40
	EP*30F****	*8MPV075	TDR	28,800	0.79	11.00			13.00	
	EP*30F****	MV12F19****	TDR	28,400	0.79	11.20			13.50	
	EP*36B****		NONE	29,000	0.79	10.95				12.85
	EP*36B****	*8MPV050	TDR	29,000	0.79	10.95			12.85	
	EP*36B****	MV08B15****	TDR	29,200	0.79	11.20			13.50	
	EP*36F****		NONE	29,000	0.79	10.95				12.85
	EP*36F****	*8MPV075	TDR	29,400	0.79	11.20			13.50	
	EP*36F****	MV12F19****	TDR	29,600	0.79	11.50			14.00	
	EP*36J****		NONE	29,000	0.79	10.95				12.85
	EP*36J****	*8MPV100	TDR	29,600	0.79	11.20			13.50	
	EP*36J****	MV16J22****	TDR	29,600	0.79	11.70			14.00	
	EPP030****		NONE	26,800	0.79	10.20				11.95
	EPP036****		NONE	27,400	0.79	10.40				12.20
	EX*36B****		TXV	30,200	0.79	11.00		13.20		
	EX*36B****	*8MPV050	TDR & TXV	30,200	0.79	11.00	13.20			
	EX*36B****	MV08B15****	TDR & TXV	30,600	0.79	11.70	14.00			
	EX*36F****		TXV	30,200	0.79	11.00		13.20		
	EX*36F****	*8MPV075	TDR & TXV	30,600	0.79	11.50	14.00			
	EX*36F****	MV12F19****	TDR & TXV	30,800	0.79	11.70	14.00			
	EX*36J****		TXV	30,200	0.79	11.00		13.20		
	EX*36J****	*8MPV100	TDR & TXV	30,800	0.79	11.70	14.00			
	EX*36J****	*8MPV125	TDR & TXV	30,800	0.79	11.70	14.00			
	EX*36J****	*9MPV100	TDR & TXV	30,800	0.79	11.50	14.00			
	EX*36J****	MV16J22****	TDR & TXV	30,800	0.79	12.00	14.00			
	FWM30****		TDR	29,600	0.79	11.00			13.20	
T2A336GKA	EBP36****		TDR	35,600	0.76	10.95			12.55	
	EBP42****		TDR	36,000	0.76	11.20			12.90	
	EBV36****		TDR & TXV	36,400	0.76	11.20	13.50			
	EBV48****		TDR & TXV	38,000	0.76	11.70	14.00			
	EBV60****		TDR & TXV	38,000	0.76	11.70	14.00			
	EBX36****		TDR & TXV	36,000	0.76	11.20	12.90			
	EL*36B****		NONE	33,400	0.76	10.80				12.40
	EL*36B****	*8MPV050	TDR	33,400	0.76	10.80			12.45	
	EL*36B****	MV08B15****	TDR	34,200	0.76	11.00			12.85	
	EL*36F****		NONE	34,000	0.76	10.70				12.35
	EL*36F****	*8MPV075	TDR	34,200	0.76	11.00			12.65	
	EL*36F****	*9MPV050	TDR	33,800	0.76	10.35			11.85	
	EL*36F****	*9MPV075	TDR	34,000	0.76	10.75			12.35	
	EL*36F****	MV12F19****	TDR	34,600	0.76	11.00			13.20	
	EL*42F****		NONE	35,000	0.76	11.15				12.85
	EL*42F****	*8MPV075	TDR	35,400	0.76	11.00			13.00	
	EL*42F****	*9MPV050	TDR	34,800	0.76	11.00			12.90	
	EL*42F****	*9MPV075	TDR	34,800	0.76	11.00			13.20	
	EL*42F****	MV12F19****	TDR	35,800	0.76	11.20			13.50	
	EMH36F****		NONE	34,000	0.76	10.70				12.35
	EMH42F****		NONE	35,000	0.76	11.15				12.85
	EP*36B****		NONE	33,400	0.76	10.80				12.40
	EP*36B****	*8MPV050	TDR	33,400	0.76	10.80			12.45	
	EP*36B****	MV08B15****	TDR	34,200	0.76	11.15			12.85	
	EP*36F****		NONE	34,000	0.76	10.70				12.35
	EP*36F****	*8MPV075	TDR	34,200	0.76	11.00			12.65	
	EP*36F****	*9MPV050	TDR	33,600	0.76	10.85			12.50	
	EP*36F****	*9MPV075	TDR	34,000	0.76	10.75			12.35	
	EP*36F****	MV12F19****	TDR	34,600	0.76	11.00			13.20	
	EP*36J****		NONE	34,000	0.76	10.70				12.35
	EP*36J****	*8MPV100	TDR	34,400	0.76	11.00			13.00	
	EP*36J****	*8MPV125	TDR	34,400	0.76	11.00			13.20	
	EP*36J****	MV16J22****	TDR	34,600	0.76	11.20			13.50	
	EP*42F****		NONE	35,000	0.76	11.15				12.85
	EP*42F****	*8MPV075	TDR	35,400	0.76	11.00			13.00	
	EP*42F****	MV12F19****	TDR	35,800	0.76	11.20			13.50	

– continued on next page –

COOLING PERFORMANCE FOR COMBINATION RATINGS (continued)
Obsolete Indoor Models

Outdoor Model	Obsolete Indoor Model	Furnace Model	Factory Installed	Cooling (95 °F)			SEER			
				BTU/hr	S/T	EER	factory	w/ field TDR	w/ field R-22 TXV	w/ field R-22 TXV + TDR
T2A336GKA (continued)	EP*42J****		NONE	35,400	0.76	11.15				12.80
	EP*42J****	*8MPV100	TDR	35,000	0.76	11.30			13.00	
	EP*42J****	MV16J22****	TDR	35,000	0.76	11.20			13.50	
	EPP036****		NONE	31,400	0.76	10.20				11.75
	EX*36B****		TXV	35,800	0.76	11.00		13.00		
	EX*36B****	*8MPV050	TDR & TXV	35,400	0.76	11.00	13.00			
	EX*36B****	MV08B15****	TDR & TXV	36,200	0.76	11.20	13.50			
	EX*36F****		TXV	35,800	0.76	11.00		13.00		
	EX*36F****	*8MPV075	TDR & TXV	36,200	0.76	11.00	13.20			
	EX*36F****	MV12F19****	TDR & TXV	36,600	0.76	11.20	13.50			
	EX*36J****		TXV	36,400	0.76	11.25		12.95		
	EX*36J****	*8MPV100	TDR & TXV	36,600	0.76	11.20	13.50			
	EX*36J****	MV16J22****	TDR & TXV	36,800	0.76	11.50	14.00			
	EX*42F****		TXV	36,800	0.76	11.00		13.20		
	EX*42F****	*8MPV075	TDR & TXV	37,000	0.76	11.20	13.50			
	EX*42F****	MV12F19****	TDR & TXV	37,200	0.76	11.50	14.00			
	EX*42J****		TXV	36,800	0.76	11.00		13.00		
	EX*42J****	*8MPV100	TDR & TXV	37,200	0.76	11.50	14.00			
	EX*42J****	MV16J22****	TDR & TXV	37,200	0.76	11.70	14.00			
T2A342GKA	EBP42****		TDR	41,000	0.75	10.70			12.55	
	EBP48****		TDR	42,000	0.75	10.90			12.80	
	EBV48****		TDR & TXV	43,500	0.75	11.50	14.00			
	EBV60****		TDR & TXV	44,500	0.75	11.70	14.00			
	EBX48****		TDR & TXV	43,000	0.75	11.00	13.20			
	EL*42F****		NONE	39,000	0.75	10.65				12.50
	EL*42F****	*8MPV075	TDR	39,500	0.75	10.80			12.70	
	EL*42F****	*9MPV075	TDR	39,000	0.75	10.70			12.60	
	EL*48F****		NONE	40,500	0.75	10.80				12.65
	EL*48F****	*8MPV075	TDR	40,500	0.75	10.85			12.70	
	EL*48F****	*9MPV075	TDR	39,500	0.75	10.90			12.80	
	EMH42F****		NONE	38,500	0.75	10.65				12.50
	EMH48F****		NONE	40,500	0.75	10.90				12.80
	EP*42F****		NONE	39,000	0.75	10.65				12.50
	EP*42F****	*8MPV075	TDR	39,500	0.75	10.80			12.70	
	EP*42F****	*9MPV075	TDR	39,000	0.75	10.70			12.60	
	EP*42J****		NONE	39,500	0.75	10.70				12.55
	EP*42J****	*8MPV100	TDR	38,500	0.75	10.70			12.60	
	EP*42J****	*8MPV125	TDR	39,500	0.75	10.70			12.55	
	EP*42J****	*9MPV100	TDR	37,600	0.75	10.60			12.45	
	EP*42J****	MV16J22****	TDR	39,500	0.75	11.00			12.95	
	EP*48F****		NONE	40,500	0.75	10.80				12.65
	EP*48F****	*8MPV075	TDR	40,500	0.75	10.85			12.70	
	EP*48F****	*9MPV075	TDR	39,500	0.75	10.90			12.80	
	EP*48J****		NONE	41,000	0.75	10.90			12.75	
	EP*48J****	*8MPV100	TDR	41,500	0.75	11.00			13.20	
	EP*48J****	*8MPV125	TDR	41,500	0.75	11.20			13.50	
	EP*48J****	*9MPV100	TDR	41,000	0.75	11.00			13.20	
	EP*48J****	MV16J22****	TDR	41,500	0.75	11.20			13.50	
	EP*48L****		NONE	41,000	0.75	10.90				12.75
	EP*48L****	*9MPV125	TDR	41,500	0.75	11.00			12.95	
	EP*48N****		NONE	41,000	0.75	10.90				12.75
	EP*48N****	MV20N26****	TDR	41,500	0.75	11.50			14.00	
	EX*42F****		TXV	41,000	0.75	11.00		13.00		
	EX*42F****	*8MPV075	TDR & TXV	41,500	0.75	11.00	13.00			
	EX*42F****	*9MPV075	TDR & TXV	40,500	0.75	11.00	13.20			
	EX*42J****		TXV	41,000	0.75	11.00		13.00		
	EX*42J****	*8MPV100	TDR & TXV	42,000	0.75	11.00	13.20			
	EX*42J****	*8MPV125	TDR & TXV	42,000	0.75	11.20	13.50			
	EX*42J****	*9MPV100	TDR & TXV	41,500	0.75	11.00	13.20			
	EX*42J****	MV16J22****	TDR & TXV	42,500	0.75	11.50	14.00			
	EX*48J****		TXV	42,000	0.75	11.00		12.95		
	EX*48J****	*9MPV125	TDR & TXV	42,000	0.75	11.00	13.20			
	EX*48L****		TXV	42,000	0.75	11.00		12.95		
	EX*48L****	*9MPV125	TDR & TXV	42,000	0.75	11.00	13.20			
	EX*48N****		TXV	42,000	0.75	11.00		12.95		
	EX*48N****	MV20N26****	TDR & TXV	42,000	0.75	11.50	14.00			

– continued on next page –

COOLING PERFORMANCE FOR COMBINATION RATINGS (continued)
Obsolete Indoor Models

Outdoor Model	Obsolete Indoor Model	Furnace Model	Factory Installed	Cooling (95 °F)			SEER			
				BTU/hr	S/T	EER	factory	w/ field TDR	w/ field R-22 TXV	w/ field R-22 TXV + TDR
T2A348GKA	EBP48****		TDR	46,500	0.76	10.95			12.50	
	EBP60****		TDR	47,500	0.76	11.05			12.60	
	EBV48****		TDR & TXV	48,000	0.76	11.20	13.50			
	EBV60****		TDR & TXV	49,000	0.76	11.50	14.00			
	EBX48****		TDR & TXV	48,000	0.76	11.00	13.00			
	EBX60****		TDR & TXV	48,500	0.76	11.00	13.20			
	EL*48F****		NONE	43,500	0.76	10.90				12.45
	EL*60J****		NONE	46,000	0.76	11.10				12.70
	EL*60J****	*8MPV100	TDR	46,500	0.76	11.25			12.90	
	EL*60J****	*8MPV125	TDR	46,500	0.76	11.00			13.00	
	EL*60J****	*9MPV100	TDR	46,000	0.76	10.80			12.35	
	EL*60J****	MV16J22****	TDR	47,000	0.76	11.20			13.50	
	EMH48F****		NONE	44,000	0.76	11.00				12.55
	EP*48F****		NONE	43,500	0.76	10.90				12.45
	EP*48J****		NONE	44,500	0.76	11.00				12.55
	EP*48J****	*8MPV100	TDR	45,000	0.76	11.00			12.55	
	EP*48J****	*8MPV125	TDR	45,000	0.76	11.20			12.80	
	EP*48J****	*9MPV100	TDR	44,000	0.76	11.20			12.80	
	EP*48J****	MV16J22****	TDR	45,500	0.76	11.00			13.20	
	EP*48L****		NONE	44,500	0.76	11.00				12.55
	EP*48L****	*9MPV125	TDR	45,000	0.76	11.10			12.70	
	EP*48N****		NONE	44,500	0.76	11.00				12.55
	EP*48N****	MV20N26****	TDR	46,000	0.76	11.00			13.20	
	EP*60J****		NONE	46,000	0.76	11.10				12.70
	EP*60J****	*8MPV100	TDR	46,500	0.76	11.25			12.90	
	EP*60J****	*8MPV125	TDR	46,500	0.76	11.00			13.20	
	EP*60J****	*9MPV100	TDR	45,000	0.76	11.00			13.20	
	EP*60J****	MV16J22****	TDR	47,000	0.76	11.20			13.50	
	EP*60L****		NONE	46,000	0.76	11.10				12.70
	EP*60L****	*9MPV125	TDR	46,000	0.76	11.00			13.00	
	EP*60N****		NONE	46,000	0.76	11.10				12.70
	EP*60N****	MV20N26****	TDR	47,000	0.76	11.20			13.50	
	EX*48J****		TXV	45,500	0.76	11.15		12.75		
	EX*48J****	*9MPV125	TDR & TXV	45,500	0.76	11.25	12.90			
	EX*48L****		TXV	45,500	0.76	11.15		12.75		
	EX*48L****	*9MPV125	TDR & TXV	45,500	0.76	11.25	12.90			
	EX*48N****		TXV	45,500	0.76	11.15		12.75		
	EX*48N****	MV20N26****	TDR & TXV	46,500	0.76	11.20	13.50			
	EX*60L****		TXV	48,500	0.76	11.00		13.00		
	EX*60L****	*9MPV125	TDR & TXV	48,500	0.76	11.20	13.50			
	EX*60N****		TXV	48,500	0.76	11.00		13.20		
	EX*60N****	MV20N26****	TDR & TXV	49,000	0.76	11.50	14.00			
T2A360GKA	EBP60****		TDR	56,500	0.78	10.60			12.10	
	EBV60****		TDR & TXV	57,000	0.78	11.20	13.50			
	EBX60****		TDR & TXV	56,500	0.78	11.00	13.00			
	EL*60J****		NONE	53,500	0.78	10.75				12.35
	EL*60J****	*8MPV100	TDR	53,000	0.78	10.90			12.50	
	EL*60J****	*8MPV125	TDR	53,500	0.78	10.80			12.40	
	EL*60J****	*9MPV100	TDR	52,000	0.78	11.00			12.60	
	EL*60J****	MV16J22****	TDR	54,500	0.78	11.00			12.65	
	EP*60J****		NONE	53,500	0.78	10.75				12.35
	EP*60J****	*8MPV100	TDR	53,000	0.78	10.90			12.50	
	EP*60J****	*8MPV125	TDR	53,500	0.78	10.80			12.40	
	EP*60J****	*9MPV100	TDR	52,000	0.78	11.00			12.60	
	EP*60J****	MV16J22****	TDR	54,500	0.78	11.00			12.65	
	EP*60L****		NONE	53,500	0.78	10.75				12.35
	EP*60L****	*9MPV125	TDR	53,000	0.78	10.95			12.55	
	EP*60N****		NONE	53,500	0.78	10.75				12.30
	EP*60N****	MV20N26****	TDR	54,500	0.78	11.10			12.75	
	EX*60L****		TXV	57,000	0.78	11.00		13.00		
	EX*60L****	*9MPV125	TDR & TXV	56,000	0.78	11.00	13.20			
	EX*60N****		TXV	57,000	0.78	11.00		13.00		
	EX*60N****	MV20N26****	TDR & TXV	57,500	0.78	11.20	13.50			

OUTDOOR UNIT MODEL NUMBER IDENTIFICATION GUIDE (single phase)

Digit Position:	1	2	3	4	5, 6	7	8	9	10	11	12
Example Part Number:	**T**	**2**	**A**	**3**	**18**	**G**	**K**	**A**	**1**	**0**	**0**

N = Non–Branded
T = Tempstar — **BRANDING**

2 = R–22
4 = R–410A — **REFRIGERANT**

A = Air Conditioner
H = Heat Pump — **TYPE**

3 = 13 SEER 6 = 16 SEER
4 = 14 SEER 7 = 17 SEER
5 = 15 SEER 8 = 18 SEER — **NOMINAL EFFICIENCY**

18 = 18,000 BTUH = 1½ tons
24 = 24,000 BTUH = 2 tons
30 = 30,000 BTUH = 2½ tons
36 = 36,000 BTUH = 3 tons
42 = 42,000 BTUH = 3½ tons
48 = 48,000 BTUH = 4 tons
60 = 60,000 BTUH = 5 tons — **NOMINAL CAPACITY**

A = Standard Grille
G = Coil Guard Grille — **FEATURES**

K = 208/230–1–60 — **VOLTAGE**

Sales Code

Engineering Revision

Extra Digit

Extra Digit

ACCESSORIES PART NUMBER IDENTIFICATION GUIDE

Digit Position:	1	2	3	4	5	6, 7	8, 9
Example Part Number:	**N**	**A**	**S**	**A**	**0**	**0 1**	**C H**

N = Non–Branded — **BRANDING**

A = Accessory — **PRODUCT GROUP**

S = Split System (AC & HP) — **KIT USAGE**

A = Original
B = 2nd Generation — **MAJOR SERIES**

0 = Generic or Not Applicable
2 = R–22
4 = R–410A — **REFRIGERANT**

Product Identifier Number

AC = Anti–Cycle Timer	LA = Low Ambient	SC = Start Component	TD = Time Delay
CH = Crankcase Heater	LS = Liq. Line Solenoid	SF = Support Feet	WS = Winter Start Control
FS = Freeze Stat	PS = Pressure Switch	SJ = Sound Jacket	**TYPE OF KIT**