TEMPSTAR®
Heating and Cooling Products

N4A4–C

Performance Series

Product Specifications

COASTAL 14 SEER AIR CONDITIONER

14 SEER/11.5–12.5 EER
R–410A REFRIGERANT

1–1/2 THRU 5 TONS SPLIT SYSTEM

208 / 230 Volt, 1–phase, 60 Hz

REFRIGERATION CIRCUIT

- Scroll compressors on all models
- Filter–drier included for field installation
- Copper tube / aluminum fin coil

EASY TO INSTALL AND SERVICE

- Easy Access service valves on all models
- External high and low refrigerant service ports
- Only two screws to access control panel
- Factory charged with R–410A refrigerant

BUILT TO LAST

- Baked–on powder coat finish on all sides
- Corrosion protection epoxy phenolic coated aluminum fins
- Coated, weather–resistant cabinet screws
- Coastal coated inlet grille with 3/8 (10mm) grille spacing for extra protection

WARRANTY*

- 5 year parts limited warranty (including compressor and coil)
  - With timely registration, an additional 5 year parts limited warranty (including compressor and coil)

AHRI CERTIFIED™ www.ahridirectory.org

Use of the AHRI Certified TM Mark indicates a manufacturer's participation in the program. For verification of certification for individual products, go to www.ahridirectory.org .

c UL US LISTED

* For residential applications only. See warranty certificate for complete details and restrictions, including warranty coverage for other applications.

Model Number	Size (tons)	Nominal Btu/hr	Min. Circuit Ampacity	Max. Fuse or Breaker	Operating Dimensions height x length/width (sq.) inches (mm)	Operating/ Ship Weight lbs. (kg)
N4A418CKA	1–1/2	18,000	11.7	20	28–7/16 x 23–1/8 (722 x 587)	111/133 (50/60)
N4A424CKA	2	24,000	14.1	25	28–7/16 x 31–3/16 (722 x 792)	136/170 (62/77)
N4A430CKA	2–1/2	30,000	16.8	25	24–13/16 x 31–3/16 (630 x 792)	152/183 (69/83)
N4A436CKA	3	36,000	17.8	30	24–13/16 x 31–3/16 (630 x 792)	155/186 (70/84)
N4A442CKA	3–1/2	42,000	22.3	35	28–7/16 x 31–3/16 (722 x 792)	189/220 (86/100)
N4A448CKA	4	48,000	24.5	40	35–3/4 x 31–3/16 (908 x 792)	199/233 (90/106)
N4A460CKA	5	60,000	31.7	50	39–1/8 x 35 (994 x 889)	248/289 (113/131)

OUTDOOR UNIT MODEL NUMBER IDENTIFICATION GUIDE (single phase)

Digit Position:	1	2	3	4	5, 6	7	8	9	10	11	12
Example Part Number:	**N**	**4**	**A**	**4**	**18**	**C**	**K**	**A**	**1**	**0**	**1**

BRANDING
- T = Tempstar Mainline
- N = Tempstar Entry

REFRIGERANT
- 4 = R–410A

TYPE
- A = Air Conditioner
- H = Heat Pump

NOMINAL EFFICIENCY
- 4 = 14 SEER

NOMINAL CAPACITY
- 18 = 18,000 BTUH = 1–1/2 tons
- 24 = 24,000 BTUH = 2 tons
- 30 = 30,000 BTUH = 2–1/2 tons
- 36 = 36,000 BTUH = 3 tons
- 42 = 42,000 BTUH = 3–1/2 tons
- 48 = 48,000 BTUH = 4 tons
- 60 = 60,000 BTUH = 5 tons

FEATURES
- C = Coastal Unit

VOLTAGE
- K = 208/230–1–60

Sales Code

Engineering Revision

Extra Digit

Extra Digit

ACCESSORIES PART NUMBER IDENTIFICATION GUIDE

Digit Position:	1	2	3	4	5	6, 7	8, 9	10, 11
Example Part Number:	**N**	**A**	**S**	**A**	**0**	**0 1**	**01**	**C H**

BRANDING
- N = Non–Branded

PRODUCT GROUP
- A = Accessory

KIT USAGE
- S = Split System (AC & HP)

MAJOR SERIES
- A = Original
- B = 2nd Generation

REFRIGERANT
- 0 = Generic or Not Applicable
- 2 = R–22
- 4 = R–410A

Product Identifier Number

Package Quantity

Type of Kit(Example: CH = Crankcase Heater)

PHYSICAL DATA

UNIT SIZE SERIES	18	24	30	36	42	48	60
Operating Weight (lb)	111	136	151.5	155	189	199	248
Shipping Weight (lb)	133	170	183	186	220	233	289
Compressor Type	Scroll						
REFRIGERANT	R−410A						
Charge (lb)	4	6.30	7.07	6.77	8.07	9.92	13.20
COND FAN	Propeller Type, Direct Drive						
Air Discharge	Vertical						
Air Qty (CFM)	1792	2200	2600	2600	3937	3600	4209
Motor HP	1/12	1/12	1/10	1/10	1/4	1/4	1/4
Motor RPM	1100	850	1100	1100	1100	1100	800
COND COIL							
Face Area (Sq ft)	9.8	15.1	12.9	12.9	15.1	19.4	25.1
Fins per In.	20	20	20	20	20	20	20
Rows	1	1	2	2	2	2	2
Circuits	3	4	5	5	6	7	10
VALVE CONNECT. (In. ID)							
Vapor	3/4”	3/4”	3/4”	7/8”	7/8”	7/8”	7/8”
Liquid	3/8”						
REFRIGERANT TUBES* (In. OD)							
Vapor (0−80 Ft Tube Length)	3/4”	3/4”	3/4”	7/8”	7/8”	7/8”	1 1/8”
Liquid (0−80 Ft Tube Length)	3/8”						

*Units are rated with 25 ft (7.6 m) of lineset length. See *Vapor Line Sizing and Cooling Capacity Loss* table when using other sizes and lengths of lineset.

Note: See unit Installation Instruction for proper installation.

VAPOR LINE SIZING AND COOLING CAPACITY LOSS

Acceptable vapor line diameters provide adequate oil return to the compressor while avoiding excessive capacity loss. The suction line diameters shown in the chart below are acceptable for AC systems with R−410A refrigerant:

Vapor Line Sizing and Cooling Capacity Losses − R−410A Refrigerant 1− Stage Air Conditioner Applications

Unit Nominal Size (Btuh)	Acceptable Vapor Line Diameters (In. OD)	Cooling Capacity Loss (%) Total Equivalent Line Length (ft)										
		Standard Application				Long Line Application Requires Accessories						
		25 (7.62)	50 (15.2)	80 (24.4)	80+ (24.4+)	100 (30.48)	125 (38.10)	150 (45.72)	175 (53.34)	200 (60.96)	225 (68.58)	250 (76.20)
18000 1−Stage R−410A AC	1/2	1	2	3	3	4	6	7	8	9	10	12
	5/8	0	0	1	1	1	1	2	2	3	3	3
24000 1−Stage R−410A AC	5/8	0	1	1	1	2	3	3	4	4	5	6
	3/4	0	0	0	0	0	1	1	1	1	1	2
30000 1−Stage R−410A AC	5/8	1	2	3	3	3	4	5	6	7	8	9
	3/4	0	0	1	1	1	1	2	2	2	3	3
	7/8	0	0	0	0	0	1	1	1	1	1	1
36000 1−Stage R−410A AC	5/8	1	2	4	4	5	6	7	9	10	11	13
	3/4	0	0	1	1	1	2	2	3	3	4	4
	7/8	0	0	0	0	0	1	1	1	1	2	2
42000 1−Stage R−410A AC	3/4	0	1	2	2	2	3	4	4	5	6	6
	7/8	0	0	1	1	1	1	2	2	2	3	3
48000 1−Stage R−410A AC	3/4	0	1	2	2	3	4	5	5	6	7	8
	7/8	0	0	1	1	1	2	2	2	3	3	4
60000 1−Stage R−410A AC	3/4	1	2	4	4	5	6	7	9	10	11	12
	7/8	0	1	2	2	2	3	4	4	5	5	6
	1 1/8	0	0	0	0	1	1	1	1	1	1	2

Standard Length = 80 ft. (24.4 m) or less total equivalent length

Applications in this area are long line. Accessories are required as shown recommended on Long Line Application Guidelines

Applications in this area may have height restrictions that limit allowable total equivalent length, when outdoor unit is below indoor unit See Long Line Application Guidelines

LONG LINE APPLICATION − An application is considered Long Line, when the refrigerant level in the system requires the use of accessories to maintain acceptable refrigerant management for systems reliability. See Accessory Usage Guideline table for required accessories. Defining a system as long line depends on the liquid line diameter, actual length of the tubing, and vertical separation between the indoor and outdoor units. See Long Line Applications Guideline for details.

ELECTRICAL DATA

UNIT SIZE	V/PH	OPER VOLTS*		COMPR		FAN	MCA	MIN WIRE SIZE†	MIN WIRE SIZE†	MAX LENGTH (FT)‡	MAX LENGTH (FT)‡	MAX FUSE** or CKT BRK AMPS
		MAX	MIN	LRA	RLA	FLA		60° C	75° C	60° C	75° C	
18	208/230/1	253	197	47.5	9	0.4	11.7	14	14	62	59	20
24				62.9	10.9	0.5	14.1	14	14	56	53	25
30				67.8	12.8	0.75	16.8	12	14	74	45	25
36				78	13.6	0.75	17.8	12	14	70	42	30
42				109	16.7	1.4	22.3	10	12	90	53	35
48				124	18.5	1.4	24.5	10	10	82	78	40
60				144.2	24.4	1.2	31.7	8	10	98	60	50

* Permissible limits of the voltage range at which the unit will operate satisfactorily

** Time−Delay fuse.

† If wire is applied at ambient greater than 30° C (86° F), consult table 310−16 of the NEC (ANSI/NFPA 70). The ampacity of non−metallic−sheathed cable (NM), trade name ROMEX, shall be that of 60° C (140° F) conditions, per the NEC (ANSI/NFPA 70) Article 336−26. If other than uncoated (no−plated), 60 or 75° C (140 or 167° C) insulation, copper wire (solid wire for 10 AWG or smaller, stranded wire for larger than 10 AWG) is used, consult applicable tables of the NEC (ANSI/NFPA 70).

‡ Length shown is as measured 1 way along wire path between unit and service panel for voltage drop not to exceed 2%.

FLA − Full Load Amps

LRA − Locked Rotor Amps

MCA − Minimum Circuit Amps

RLA − Rated Load Amps

NOTE: Control circuit is 24−V on all units and requires external power source. Copper wire must be used from service disconnect to unit.

All motors/compressors contain internal overload protection.

Complies with 2007 requirements of ASHRAE Standards 90.1

A−WEIGHTED SOUND POWER (dBA) WITHOUT SOUND SHIELD

UNIT SIZE	STANDARD RATING (dBA)	TYPICAL OCTAVE BAND SPECTRUM (dBA, without tone adjustment)						
		125	250	500	1000	2000	4000	8000
18	76	50.3	58.1	63.6	73.5	69.3	65.1	54.0
24	73	53.2	61.6	65.2	69.8	65.0	61.4	53.8
30	76	57.0	64.5	70.3	72.5	68.4	64.1	57.8
36	77	53.8	64.4	69.9	73.5	69.5	66.2	59.7
42	76	58.7	68.0	69.7	70.1	67.6	64.5	57.1
48	75	53	67	62	69	62	58	50
60	73	52	57	61	66	59	57	51

NOTE: Tested in accordance with AHRI Standard 270−08 (not listed in AHRI).

A−WEIGHTED SOUND POWER WITH SOUND HOOD

UNIT SIZE	STANDARD RATING (dBA)	TYPICAL OCTAVE BAND SPECTRUM (dBA, without tone adjustment)						
		125	250	500	1000	2000	4000	8000
18	72	51.0	57.7	63.1	69.7	64.7	59.5	53.2
24	72	54.4	62.0	65.0	67.7	64.1	60.8	53.1
30	76	56.2	64.7	69.9	71.7	68.2	63.8	57.1
36	76	53.7	64.5	69.5	72.3	68.5	65.2	59.3
42	75	58.9	67.0	69.4	69.7	66.7	61.9	53.5
48	74	52	66	62	68	62	56	48
60	72	51	57	60	65	59	55	48

NOTE: Tested in accordance with AHRI Standard 270−08 (not listed in AHRI).

CHARGING SUBCOOLING (TXV−TYPE EXPANSION DEVICE)

UNIT SIZE−SERIES	REQUIRED SUBCOOLING °F (°C)
18	11 (6.1)
24	11 (6.1)
30	8 (4.4)
36	8 (4.4)
42	10 (5.6)
48	11 (6.1)
60	15 (8.3)

DIMENSIONS – ENGLISH

UNIT	SERIES	ELECTRICAL CHARACTERISTICS				A	B	C	D	E	F	G	K	L	M	N	P	OPERATING WEIGHT (lbs)	SHIPPING WEIGHT (lbs)	SHIPPING DIMENSIONS (L x W x H)
N4A418CKA	1	X	O	O	O	23 1/8"	28 7/16"	3 3/4"	3/4"	4 7/16"	18 1/16"	7 13/16"	2 13/16"	1/2"	12"	12 1/2"	13 3/4"	111	133	24 1/8" X 24 1/8" X 30 5/8"
N4A424CKA	1	X	O	O	O	31 3/16"	28 7/16"	3 3/4"	3/4"	6 9/16"	24 11/16"	9 1/8"	2 13/16"	1/2"	15"	16"	14 1/4"	136	170	33 3/8" X 33 3/8" X 30 5/8"
N4A430CKA	1	X	O	O	O	31 3/16"	24 13/16"	3 3/4"	3/4"	6 9/16"	24 11/16"	9 1/8"	2 13/16"	1/2"	16"	16 1/2"	12 1/4"	151.5	183	33 3/8" X 33 3/8" X 27 3/16"
N4A436CKA	1	X	O	O	O	31 3/16"	24 13/16"	3 7/8"	7/8"	6 9/16"	24 11/16"	9 1/8"	2 15/16"	5/8"	17"	15"	12"	155	186	33 3/8" X 33 3/8" X 27 3/16"
N4A442CKA	1	X	O	O	O	31 3/16"	28 7/16"	3 7/8"	7/8"	6 9/16"	24 11/16"	9 1/8"	2 15/16"	5/8"	15 3/4"	17 3/4"	14 1/2"	189	220	33 3/8" X 33 3/8" X 30 5/8"
N4A448CKA	1	X	O	O	O	31 3/16"	35 3/4"	3 7/8"	7/8"	6 9/16"	24 11/16"	9 1/8"	2 15/16"	5/8"	16 5/8"	15 1/4"	16 1/4"	199	233	33 3/8" X 33 3/8" X 40"
N4A460CKA	1	X	O	O	O	35"	39 1/8"	3 7/8"	7/8"	6 9/16"	28 7/16"	9 1/8"	2 15/16"	5/8"	16"	17 3/4"	19 1/2"	248	289	36 1/8" X 36 1/8" X 42 3/4"
		208-230-1-60	230-1-60	208/230-3-60	460-3-60															

X = YES
O = NO

UNIT SIZE	"X" MIN GROUND MOUNTING PAD APPLICATION DIMENSIONS	"Y" MIN ROOF-TOP MOUNTING PAD APPLICATION DIMENSIONS
18	23 1/8"	17 3/4"
-	25 3/4"	20 7/16"
24 THRU 48	31 3/16"	23"
60	35"	26 3/4"

NOTES:

1. ALLOW 30" CLEARANCE TO SERVICE SIDE OF UNIT, 48" ABOVE UNIT, 6" ON ONE SIDE, 12" ON REMAINING SIDE, AND 24" BETWEEN UNITS FOR PROPER AIRFLOW.
2. MINIMUM OUTDOOR OPERATING AMBIENT IN COOLING MODE IS 55°F, MAX. 125°F.
3. SERIES DESIGNATION IS THE 10TH POSITION OF THE UNIT MODEL NUMBER.
4. CENTER OF GRAVITY ⊕.
5. ALL DIMENSIONS ARE IN "INCHES" UNLESS NOTED.

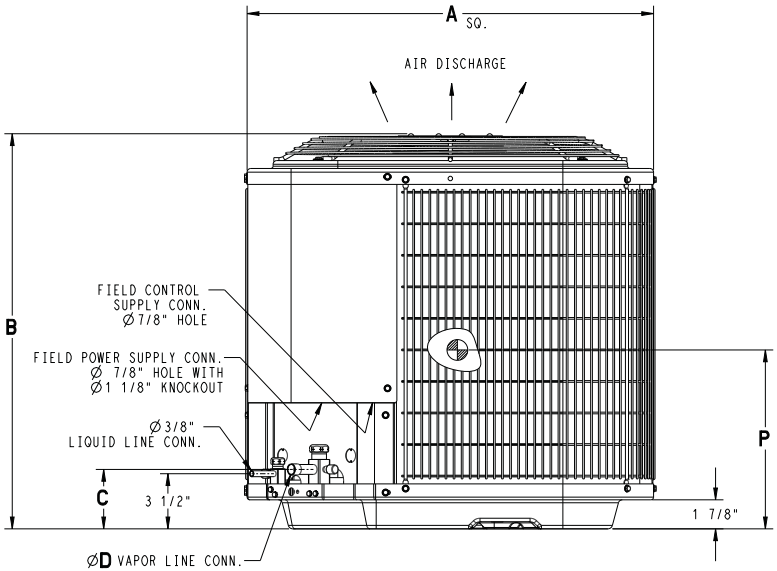

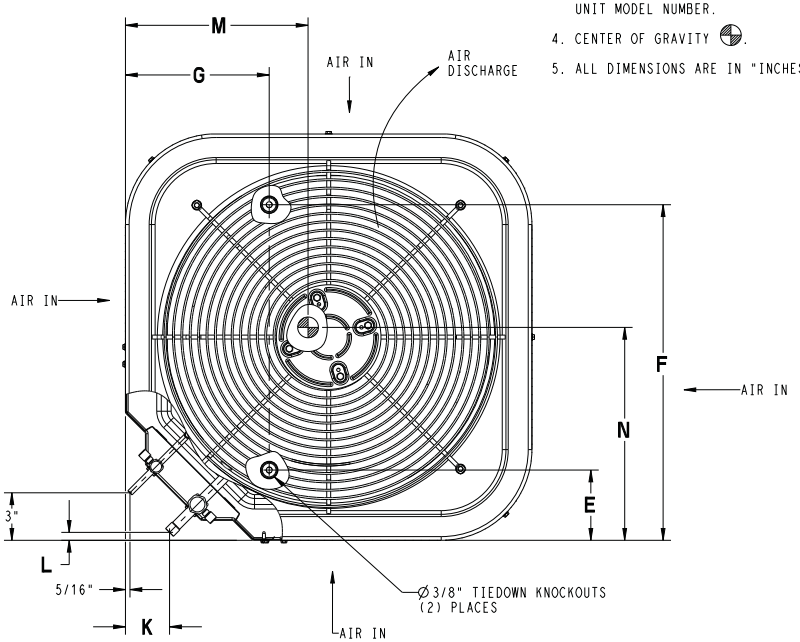

SD5341–4 REV A

DIMENSIONS – SI

UNIT	SERIES	ELECTRICAL CHARACTERISTICS				A	B	C	D	E	F	G	K	L	M	N	P	OPERATING WEIGHT (Kgs)	SHIPPING WEIGHT (Kgs)	SHIPPING DIMENSIONS (L x W x H)
		208-230-1-60	230-1-60	208/230-3-60	460-3-60															
N4A430CKA	1	X	O	O	O	587.4	722.3	95.2	19.0	112.7	458.8	198.4	71.4	12.7	304.8	317.5	349.3	50.3	60.3	612.8 X 612.8 X 777.9
N4A424CKA	1	X	O	O	O	792.2	722.3	95.2	19.0	166.7	627.7	231.8	71.4	12.7	381.0	406.4	362.0	61.7	77.1	846.6 X 846.6 X 777.9
N4A430CKA	1	X	O	O	O	792.2	630.2	95.2	19.0	166.7	627.7	231.8	71.4	12.7	406.4	419.1	311.2	68.7	83.0	846.6 X 846.6 X 690.6
N4A436CKA	1	X	O	O	O	792.2	630.2	98.4	22.2	166.7	627.7	231.8	74.6	15.9	431.8	381.0	304.8	70.3	84.4	846.6 X 846.6 X 690.6
N4A442CKA	1	X	O	O	O	792.2	722.3	98.4	22.2	166.7	627.7	231.8	74.6	15.9	400.1	438.2	368.3	85.7	99.8	846.6 X 846.6 X 777.9
N4A448CKA	1	X	O	O	O	792.2	908.0	98.4	22.2	166.7	627.7	231.8	74.6	15.9	422.3	387.4	412.8	90.3	105.7	846.6 X 846.6 X 1016.9
N4A460CKA	1	X	O	O	O	889.0	993.8	98.4	22.2	166.7	722.3	231.8	74.6	15.9	406.4	450.9	495.3	112.5	131.1	917.6 X 917.6 X 1085.8

X = YES
O = NO

UNIT SIZE	"X" MIN GROUND MOUNTING PAD APPLICATION DIMENSIONS	"Y" MIN ROOF-TOP MOUNTING PAD APPLICATION DIMENSIONS
18	587.3	451.3
-	654.0	518.5
24 THRU 48	792.2	583.2
60	889.0	679.7

NOTES:

1. ALLOW 762.0 CLEARANCE TO SERVICE SIDE OF UNIT, 1219.2 ABOVE UNIT, 152.4 ON ONE SIDE, 304.8 ON REMAINING SIDE, AND 609.6 BETWEEN UNITS FOR PROPER AIRFLOW.
2. MINIMUM OUTDOOR OPERATING AMBIENT IN COOLING MODE IS 13°C, MAX. 52°C.
3. SERIES DESIGNATION IS THE 10TH POSITION OF THE UNIT MODEL NUMBER.
4. CENTER OF GRAVITY ⊕.
5. ALL DIMENSIONS ARE IN "MM" UNLESS NOTED.

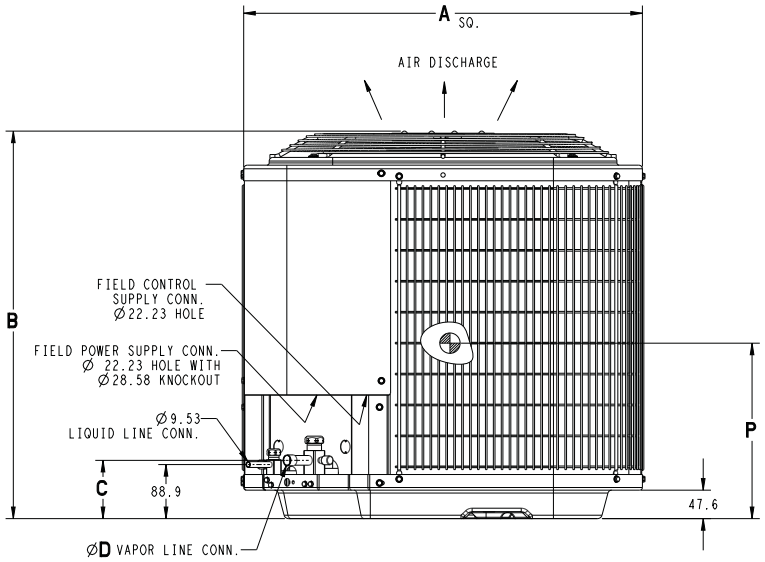

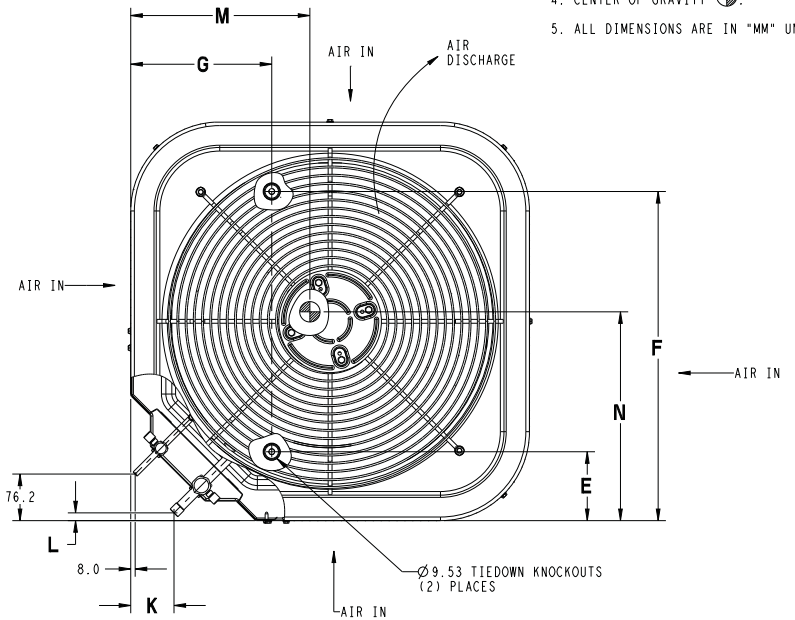

SD5341—4 REV A

Specifications subject to change without notice.

DETAILED COOLING CAPACITIES#

EVAPORATOR AIR		CONDENSER ENTERING AIR TEMPERATURES deg F																	
		75			85			95			105			115			125		
CFM	EWB	Capacity MBtuh		Total System KW	Capacity MBtuh		Total System KW	Capacity MBtuh		Total System KW	Capacity MBtuh		Total System KW	Capacity MBtuh		Total System KW	Capacity MBtuh		Total System KW
		Total	Sens		Total	Sens		Total	Sens		Total	Sens		Total	Sens		Total	Sens	
N4A418CKG Size Outdoor With EA*4X19L17A* Indoor Cooling																			
525	57	16.93	16.93	1.22	16.34	16.34	1.36	15.71	15.71	1.52	15.01	15.01	1.70	14.22	14.22	1.90	13.32	13.32	2.14
	62	17.34	15.33	1.22	16.61	15.01	1.36	15.83	14.65	1.52	15.04	15.04	1.70	14.24	14.24	1.90	13.35	13.35	2.14
	63	17.70	12.46	1.22	16.95	12.14	1.36	16.14	11.81	1.52	15.26	11.44	1.70	14.23	11.03	1.91	13.10	10.58	2.14
	67	18.99	12.91	1.21	18.22	12.62	1.35	17.40	12.30	1.51	16.49	11.95	1.69	15.45	11.57	1.90	14.25	11.12	2.14
	72	20.79	10.44	1.20	20.01	10.16	1.34	19.16	9.87	1.51	18.22	9.54	1.69	17.14	9.18	1.90	15.88	8.75	2.14
600	57	17.65	17.65	1.25	17.03	17.03	1.39	16.37	16.37	1.54	15.64	15.64	1.72	14.81	14.81	1.93	13.86	13.86	2.17
	62	17.72	17.63	1.25	17.06	17.06	1.39	16.40	16.40	1.54	15.67	15.67	1.72	14.83	14.83	1.93	13.88	13.88	2.17
	63	18.03	13.32	1.25	17.25	13.01	1.39	16.43	12.67	1.55	15.51	12.30	1.73	14.47	11.88	1.94	13.30	11.42	2.17
	67	19.31	13.84	1.24	18.53	13.54	1.38	17.68	13.23	1.54	16.74	12.88	1.72	15.68	12.48	1.93	14.46	12.03	2.17
	72	21.14	11.01	1.23	20.33	10.74	1.37	19.46	10.44	1.54	18.49	10.12	1.72	17.38	9.75	1.93	16.08	9.32	2.17
675	57	18.25	18.25	1.27	17.61	17.61	1.41	16.92	16.92	1.57	16.16	16.16	1.75	15.30	15.30	1.96	14.30	14.30	2.20
	62	18.27	18.27	1.27	17.63	17.63	1.41	16.95	16.95	1.57	16.18	16.18	1.75	15.32	15.32	1.96	14.32	14.32	2.20
	63	18.27	14.16	1.27	17.48	13.84	1.42	16.63	13.50	1.57	15.71	13.13	1.76	14.64	12.71	1.96	13.46	12.22	2.20
	67	19.55	14.75	1.26	18.75	14.45	1.41	17.89	14.13	1.57	16.93	13.78	1.75	15.86	13.38	1.96	14.61	12.92	2.20
	72	21.38	11.58	1.25	20.56	11.30	1.40	19.67	11.01	1.56	18.67	10.68	1.75	17.54	10.31	1.96	16.21	9.88	2.20
N4A424CKA Size Outdoor With EAM4X25L17 Indoor Cooling																			
700	57	22.60	22.60	1.58	21.79	21.79	1.74	20.95	20.95	1.93	20.03	20.03	2.15	19.04	19.04	2.40	17.93	17.93	2.70
	62	23.23	20.43	1.58	22.21	19.98	1.74	21.14	19.51	1.93	20.06	20.06	2.15	19.07	19.07	2.40	17.96	17.96	2.70
	63	23.72	16.63	1.58	22.67	16.19	1.74	21.57	15.73	1.93	20.40	15.25	2.15	19.14	14.73	2.40	17.75	14.18	2.70
	67	25.49	17.26	1.58	24.38	16.83	1.74	23.21	16.37	1.93	21.97	15.89	2.15	20.63	15.39	2.40	19.14	14.84	2.69
	72	27.98	14.00	1.57	26.78	13.57	1.74	25.51	13.13	1.93	24.16	12.66	2.15	22.70	12.17	2.40	21.11	11.63	2.69
800	57	23.60	23.60	1.61	22.74	22.74	1.78	21.83	21.83	1.97	20.84	20.84	2.19	19.78	19.78	2.44	18.59	18.59	2.73
	62	23.75	22.07	1.61	22.77	22.77	1.78	21.86	21.86	1.97	20.88	20.88	2.19	19.81	19.81	2.44	18.62	18.62	2.73
	63	24.18	17.77	1.61	23.09	17.33	1.78	21.94	16.86	1.97	20.73	16.37	2.19	19.42	15.85	2.44	17.99	15.28	2.74
	67	25.97	18.49	1.61	24.81	18.05	1.78	23.59	17.59	1.97	22.29	17.10	2.19	20.90	16.59	2.44	19.38	16.03	2.73
	72	28.48	14.77	1.61	27.23	14.34	1.78	25.90	13.89	1.97	24.49	13.42	2.18	22.98	12.91	2.44	21.34	12.37	2.72
900	57	24.44	24.44	1.65	23.52	23.52	1.82	22.55	22.55	2.01	21.51	21.51	2.22	20.39	20.39	2.48	19.13	19.13	2.77
	62	24.48	24.48	1.65	23.55	23.55	1.82	22.59	22.59	2.01	21.54	21.54	2.22	20.42	20.42	2.48	19.15	19.15	2.77
	63	24.53	18.89	1.65	23.39	18.43	1.82	22.21	17.96	2.01	20.97	17.46	2.23	19.63	16.93	2.48	18.16	16.33	2.77
	67	26.32	19.69	1.65	25.12	19.24	1.82	23.86	18.77	2.01	22.53	18.28	2.22	21.11	17.76	2.48	19.55	17.18	2.77
	72	28.83	15.52	1.65	27.54	15.09	1.82	26.17	14.63	2.01	24.72	14.16	2.22	23.17	13.65	2.47	21.48	13.10	2.76
N4A430CKA Size Outdoor With EAM4X37L21 Indoor Cooling																			
875	57	28.18	28.18	1.89	27.13	27.13	2.08	26.02	26.02	2.29	24.83	24.83	2.53	23.54	23.54	2.81	22.12	22.12	3.14
	62	28.80	26.55	1.89	27.49	25.95	2.08	26.13	26.00	2.29	24.87	24.87	2.53	23.57	23.57	2.81	22.15	22.15	3.14
	63	29.39	21.55	1.89	28.03	20.96	2.08	26.60	20.35	2.29	25.10	19.71	2.53	23.49	19.04	2.81	21.75	18.32	3.14
	67	31.59	22.38	1.89	30.13	21.79	2.08	28.60	21.19	2.29	26.98	20.55	2.53	25.25	19.88	2.81	23.39	19.16	3.14
	72	34.68	18.09	1.89	33.08	17.51	2.07	31.40	16.91	2.29	29.63	16.28	2.53	27.73	15.62	2.81	25.70	14.92	3.14
1000	57	29.40	29.40	1.94	28.27	28.27	2.13	27.07	27.07	2.34	25.79	25.79	2.58	24.40	24.40	2.86	22.88	22.88	3.19
	62	29.47	29.43	1.94	28.31	28.31	2.13	27.11	27.11	2.34	25.83	25.83	2.58	24.43	24.43	2.86	22.91	22.91	3.19
	63	29.93	23.04	1.94	28.52	22.44	2.13	27.03	21.82	2.34	25.46	21.16	2.58	23.80	20.48	2.86	22.00	19.74	3.19
	67	32.15	23.99	1.94	30.62	23.39	2.12	29.03	22.77	2.33	27.35	22.12	2.58	25.55	21.43	2.86	23.64	20.70	3.19
	72	35.25	19.10	1.94	33.59	18.52	2.12	31.84	17.90	2.33	29.99	17.26	2.58	28.03	16.60	2.86	25.93	15.89	3.19
1125	57	30.42	30.42	1.99	29.21	29.21	2.17	27.93	27.93	2.38	26.57	26.57	2.62	25.10	25.10	2.91	23.50	23.50	3.24
	62	30.46	30.46	1.99	29.25	29.25	2.17	27.97	27.97	2.38	26.61	26.61	2.62	25.13	25.13	2.91	23.52	23.52	3.24
	63	30.34	24.49	1.99	28.87	23.88	2.17	27.34	23.24	2.38	25.73	22.58	2.63	24.02	21.87	2.91	22.20	21.08	3.24
	67	32.56	25.55	1.98	30.99	24.94	2.17	29.34	24.31	2.38	27.61	23.64	2.62	25.78	22.94	2.91	23.83	22.17	3.24
	72	35.66	20.09	1.98	33.94	19.49	2.17	32.13	18.87	2.38	30.24	18.23	2.62	28.22	17.55	2.91	26.07	16.83	3.24

Specifications subject to change without notice.

DETAILED COOLING CAPACITIES# CONTINUED

EVAPORATOR AIR		CONDENSER ENTERING AIR TEMPERATURES deg F																	
		75			85			95			105			115			125		
CFM	EWB °F (°C)	Capacity MBtuh Total	Capacity MBtuh Sens	Total System KW	Capacity MBtuh Total	Capacity MBtuh Sens	Total System KW	Capacity MBtuh Total	Capacity MBtuh Sens	Total System KW	Capacity MBtuh Total	Capacity MBtuh Sens	Total System KW	Capacity MBtuh Total	Capacity MBtuh Sens	Total System KW	Capacity MBtuh Total	Capacity MBtuh Sens	Total System KW
N4A436CKA Size Outdoor With EAM4X37L21 Indoor Cooling																			
1050	57	33.25	33.25	2.27	32.03	32.03	2.52	30.75	30.75	2.78	29.33	29.33	3.07	27.70	27.70	3.43	25.82	25.82	3.86
	62	33.81	31.48	2.27	32.31	30.77	2.52	30.80	30.80	2.78	29.38	29.38	3.07	27.74	27.74	3.43	25.85	25.85	3.86
	63	34.45	25.48	2.27	32.89	24.81	2.52	31.26	24.12	2.78	29.49	23.37	3.07	27.48	22.53	3.42	25.20	21.59	3.85
	67	37.03	26.49	2.28	35.36	25.82	2.53	33.60	25.12	2.80	31.67	24.37	3.10	29.52	23.53	3.45	27.07	22.60	3.88
	72	40.65	21.36	2.29	38.82	20.70	2.56	36.88	20.01	2.83	34.76	19.26	3.14	32.38	18.44	3.50	29.72	17.53	3.94
1200	57	34.65	34.65	2.33	33.34	33.34	2.58	31.96	31.96	2.85	30.43	30.43	3.14	28.67	28.67	3.50	26.66	26.66	3.94
	62	34.70	34.70	2.33	33.39	33.39	2.59	32.00	32.00	2.85	30.47	30.47	3.15	28.71	28.71	3.50	26.70	26.70	3.94
	63	35.06	27.25	2.33	33.44	26.57	2.59	31.74	25.86	2.85	29.89	25.09	3.14	27.82	24.23	3.49	25.48	23.26	3.92
	67	37.65	28.39	2.34	35.91	27.70	2.60	34.08	26.99	2.86	32.08	26.22	3.16	29.85	25.37	3.52	27.35	24.41	3.95
	72	41.28	22.56	2.36	39.39	21.89	2.63	37.36	21.18	2.90	35.16	20.42	3.21	32.70	19.59	3.57	29.96	18.66	4.01
1350	57	35.82	35.82	2.39	34.43	34.43	2.65	32.95	32.95	2.92	31.32	31.32	3.22	29.46	29.46	3.57	27.34	27.34	4.01
	62	35.87	35.87	2.39	34.47	34.47	2.65	32.99	32.99	2.92	31.36	31.36	3.22	29.50	29.50	3.57	27.37	27.37	4.01
	63	35.52	28.96	2.39	33.84	28.26	2.65	32.09	27.54	2.91	30.20	26.75	3.20	28.08	25.86	3.55	25.73	25.53	3.98
	67	38.11	30.23	2.40	36.32	29.54	2.66	34.43	28.81	2.93	32.38	28.02	3.23	30.10	27.14	3.58	27.57	26.11	4.02
	72	41.74	23.70	2.42	39.77	23.03	2.69	37.69	22.31	2.97	35.42	21.54	3.28	32.90	20.70	3.64	30.09	19.76	4.08
N4A442CKA Size Outdoor With EA*4X43L21A* Indoor Cooling																			
1250	57	39.42	39.42	2.77	38.01	38.01	3.03	36.54	36.54	3.32	34.94	34.94	3.67	33.18	33.18	4.07	31.18	31.18	4.54
	62	40.19	36.52	2.77	38.44	35.71	3.03	36.68	36.45	3.32	35.00	35.00	3.67	33.23	33.23	4.07	31.23	31.23	4.54
	63	40.88	29.60	2.77	39.07	28.82	3.03	37.20	28.03	3.32	35.20	27.20	3.67	33.02	26.30	4.07	30.60	25.31	4.54
	67	43.99	30.77	2.78	42.03	29.99	3.04	40.00	29.20	3.33	37.84	28.36	3.68	35.49	27.46	4.08	32.90	26.48	4.55
	72	48.32	24.89	2.80	46.14	24.11	3.05	43.88	23.31	3.34	41.51	22.48	3.69	38.93	21.60	4.09	36.10	20.63	4.56
1400	57	40.85	40.85	2.83	39.34	39.34	3.09	37.77	37.77	3.38	36.07	36.07	3.73	34.19	34.19	4.13	32.08	32.08	4.60
	62	41.02	40.70	2.83	39.40	39.40	3.09	37.83	37.83	3.39	36.12	36.12	3.73	34.24	34.24	4.13	32.12	32.12	4.60
	63	41.52	31.30	2.83	39.63	30.50	3.09	37.69	29.70	3.38	35.64	28.85	3.73	33.38	27.93	4.13	30.91	26.92	4.60
	67	44.65	32.60	2.84	42.60	31.80	3.10	40.50	30.99	3.39	38.28	30.14	3.74	35.86	29.22	4.14	33.20	28.22	4.61
	72	48.99	26.03	2.86	46.72	25.23	3.11	44.39	24.43	3.40	41.94	23.59	3.75	39.27	22.69	4.15	36.37	21.72	4.61
1575	57	42.20	42.20	2.91	40.58	40.58	3.17	38.91	38.91	3.46	37.10	37.10	3.81	35.11	35.11	4.21	32.89	32.89	4.68
	62	42.26	42.26	2.91	40.64	40.64	3.17	38.96	38.96	3.46	37.15	37.15	3.81	35.16	35.16	4.21	32.92	32.92	4.68
	63	42.05	33.19	2.91	40.11	32.38	3.17	38.11	31.56	3.46	35.98	30.69	3.81	33.69	29.74	4.21	31.17	28.66	4.68
	67	45.19	34.65	2.92	43.08	33.83	3.18	40.92	33.01	3.47	38.62	32.13	3.81	36.15	31.18	4.22	33.46	30.14	4.68
	72	49.54	27.30	2.94	47.20	26.50	3.19	44.79	25.68	3.48	42.25	24.82	3.82	39.53	23.92	4.22	36.55	22.94	4.69
N4A448CKA Size Outdoor With EA*4X60L24A* Indoor Cooling																			
1400	57	44.69	44.69	3.13	43.10	43.10	3.43	41.40	41.40	3.77	39.55	39.55	4.17	37.50	37.50	4.62	35.22	35.22	5.13
	62	45.72	42.76	3.14	43.76	41.81	3.43	41.71	40.78	3.78	39.60	39.60	4.17	37.55	37.55	4.62	35.27	35.27	5.13
	63	46.45	34.73	3.14	44.39	33.80	3.43	42.24	32.85	3.78	39.91	31.83	4.17	37.37	30.72	4.62	34.62	29.53	5.12
	67	50.04	36.11	3.14	47.83	35.19	3.44	45.50	34.22	3.79	42.99	33.20	4.19	40.26	32.10	4.64	37.30	30.91	5.14
	72	55.01	29.34	3.15	52.60	28.43	3.46	50.04	27.47	3.81	47.28	26.45	4.21	44.28	25.36	4.67	41.02	24.19	5.17
1600	57	46.53	46.53	3.21	44.82	44.82	3.51	42.99	42.99	3.86	41.00	41.00	4.26	38.81	38.81	4.71	36.38	36.38	5.22
	62	46.81	45.90	3.21	44.86	44.86	3.51	43.05	43.05	3.86	41.06	41.06	4.26	38.86	38.86	4.71	36.42	36.42	5.22
	63	47.29	36.94	3.22	45.17	36.01	3.51	42.91	35.03	3.86	40.50	33.98	4.26	37.88	32.85	4.70	35.04	31.62	5.21
	67	50.90	38.48	3.22	48.62	37.56	3.52	46.20	36.58	3.87	43.58	35.53	4.27	40.78	34.40	4.72	37.71	33.18	5.23
	72	55.94	30.83	3.23	53.43	29.90	3.54	50.75	28.92	3.89	47.88	27.88	4.29	44.79	26.77	4.75	41.40	25.58	5.25
1800	57	48.03	48.03	3.29	46.22	46.22	3.59	44.28	44.28	3.94	42.17	42.17	4.34	39.85	39.85	4.80	37.29	37.29	5.30
	62	48.09	48.09	3.29	46.28	46.28	3.59	44.34	44.34	3.94	42.22	42.22	4.34	39.90	39.90	4.80	37.33	37.33	5.30
	63	47.93	39.06	3.29	45.73	38.10	3.59	43.42	37.10	3.94	40.94	36.03	4.34	38.26	34.85	4.78	35.38	33.56	5.29
	67	51.57	40.77	3.30	49.20	39.82	3.60	46.70	38.82	3.95	44.03	37.75	4.35	41.15	36.58	4.80	38.03	35.30	5.31
	72	56.62	32.23	3.31	54.02	31.29	3.61	51.26	30.29	3.97	48.31	29.24	4.37	45.11	28.12	4.83	41.65	26.91	5.33

See notes on page 9

DETAILED COOLING CAPACITIES# CONTINUED

EVAPORATOR AIR		CONDENSER ENTERING AIR TEMPERATURES deg F																	
		75			85			95			105			115			125		
CFM	EWB	Capacity MBtuh		Total System KW	Capacity MBtuh		Total System KW	Capacity MBtuh		Total System KW	Capacity MBtuh		Total System KW	Capacity MBtuh		Total System KW	Capacity MBtuh		Total System KW
		Total	Sens		Total	Sens		Total	Sens		Total	Sens		Total	Sens		Total	Sens	
N4A460CKA Size Outdoor With EAM4X60L24 Indoor Cooling																			
1750	57	57.13	57.13	3.82	55.13	55.13	4.20	52.98	52.98	4.64	50.62	50.62	5.15	48.02	48.02	5.72	45.10	45.10	6.36
	62	58.66	54.17	3.83	56.19	52.99	4.21	53.58	51.69	4.64	50.83	50.22	5.15	48.08	48.08	5.72	45.16	45.16	6.36
	63	59.58	44.09	3.84	57.01	42.93	4.21	54.24	41.69	4.65	51.27	40.38	5.15	48.03	38.97	5.72	44.47	37.42	6.35
	67	64.25	45.85	3.86	61.48	44.68	4.24	58.50	43.44	4.68	55.28	42.12	5.19	51.78	40.71	5.76	47.95	39.17	6.39
	72	70.70	37.43	3.88	67.65	36.25	4.27	64.37	35.01	4.72	60.83	33.69	5.23	56.96	32.28	5.80	52.74	30.74	6.44
2000	57	59.42	59.42	3.93	57.27	57.27	4.31	54.97	54.97	4.75	52.44	52.44	5.26	49.65	49.65	5.83	46.55	46.55	6.47
	62	60.03	58.04	3.93	57.54	56.70	4.31	55.03	55.03	4.75	52.50	52.50	5.26	49.71	49.71	5.83	46.60	46.60	6.48
	63	60.69	46.79	3.93	57.99	45.60	4.31	55.13	44.35	4.75	52.03	43.01	5.25	48.68	41.56	5.82	45.02	39.97	6.46
	67	65.42	48.75	3.95	62.50	47.56	4.34	59.40	46.30	4.78	56.07	44.96	5.29	52.44	43.51	5.86	48.50	41.93	6.50
	72	71.94	39.24	3.98	68.74	38.04	4.37	65.33	36.79	4.82	61.63	35.44	5.33	57.63	33.99	5.90	53.26	32.43	6.54
2250	57	61.31	61.31	4.03	59.03	59.03	4.41	56.59	56.59	4.85	53.92	53.92	5.36	50.97	50.97	5.94	47.70	47.70	6.58
	62	61.35	61.35	4.03	59.11	59.11	4.41	56.66	56.66	4.86	53.98	53.98	5.36	51.03	51.03	5.94	47.75	47.75	6.58
	63	61.52	49.35	4.03	58.74	48.15	4.41	55.78	46.86	4.85	52.61	45.49	5.35	49.17	43.99	5.92	45.44	42.32	6.56
	67	66.26	51.51	4.05	63.27	50.31	4.43	60.08	49.03	4.88	56.65	47.65	5.39	52.93	46.16	5.96	48.91	44.47	6.59
	72	72.86	40.94	4.07	69.55	39.73	4.46	66.01	38.45	4.91	62.20	37.07	5.43	58.08	35.61	6.00	53.59	34.03	6.64

† Total and sensible capacities are net capacities. Blower motor heat has been subtracted.
‡ Sensible capacities shown are based on 80°F (27°C) entering air at the indoor coil. For sensible capacities at other than 80°F (27°C), deduct 835 Btuh (245 kW) per 1000 CFM (480 L/S) of indoor coil air for each degree below 80°F (27°C), or add 835 Btuh (245 kW) per 1000 CFM (480 L/S) of indoor coil air per degree above 80°F (27°C).
# Detailed cooling capacities are based on indoor and outdoor unit at the same elevation per AHRI standard 210/240–2008. If additional tubing length and/or indoor unit is located above outdoor unit, a slight variation in capacity may occur.
** Sys. kw is total of indoor and outdoor unit kilowatts.
†† At TVA rating indoor condition (75°F edb/63°F ewb). All other indoor air temperatures are at 80°F edb.
NOTE: When the required data falls between the published data, interpolation may be performed. Extrapolation is not an acceptable practice.
EWB — Entering Wet Bulb

Specifications subject to change without notice.

TESTED AHRI COMBINATION RATINGS*

NOTE: Ratings contained in this document are subject to change at any time.

For AHRI ratings certificates, please refer to the AHRI directory. **www.ahridirectory.org**

Additional ratings and system combinations can be accessed via the Tempstar database:
http://www.icpeqp.com/AHRIratings/ratings.aspx?Brand=Tempstar

Or scan this QR code:

UNIT SIZE	INDOOR MODEL	AHRI STANDARD RATINGS						FURNACE MODEL
		COOLING						
		CAPACITY	FACTORY ENHANCE	SEER			EER	
				STANDARD	TDR	TXV		
18	EA*4X19L17A*	17,400	TXV		14.00		11.50	
24	EA*4X25L17A*	23,400	TXV		14.00		12.00	
30	EA*4X37L21A*	28,600	TXV		14.50		12.50	
36	EA*4X37L21A*	33,600	TXV		14.00		12.00	
42	EA*4X43L21A*	40,000	TXV		14.00		12.00	
48	EA*4X60L24A*	45,500	TXV		14.00		12.00	
60	EA*4X60L24A*	57,500	TXV		14.00		11.70	

AHRI — Air Conditioning, Heating & Refrigeration Institute
EER — Energy Efficiency Ratio – 80°F (26.6°C) indoor db/67°F (19.4°C) indoor wb & 95°F (35°C) outdoor wb.
SEER— Seasonal Energy Efficiency Ratio
TDR —Time−Delay Relay. In most cases, only one method should be used to achieve TDR function. Using more than one method in a system may cause degradation in performance. Use either the accessory Time−Delay Relay or a furnace equipped with TDR. Most ICP furnaces are equipped with TDR.

NOTES:
1. Ratings are net values reflecting the effects of circulating fan motor heat. Supplemental electric heat is not included.
2. Tested outdoor/indoor combinations have been tested in accordance with DOE test procedures for central air conditioners. Ratings for other combinations are determined under DOE computer simulation procedures.
3. Determine actual CFM values obtainable for your system by referring to fan performance data in fan coil or furnace coil literature.
4. Do not apply with capillary tube coils as performance and reliability are significantly affected.

CONDENSER RATING ONLY

SST deg F		CONDENSER ENTERING AIR TEMPERATURES deg F							
		55	65	75	85	95	105	115	125
N4A418CKA									
30	TCG	15.60	14.50	13.50	12.60	11.70	10.70	9.70	8.70
	SDT	69.20	78.40	87.70	97.10	106.40	115.80	125.10	134.40
	KW	0.80	0.91	1.02	1.15	1.30	1.46	1.65	1.86
35	TCG	17.20	16.00	15.00	14.00	13.00	12.00	10.90	9.70
	SDT	70.40	79.60	88.90	98.20	107.50	116.80	126.00	135.10
	KW	0.80	0.91	1.02	1.16	1.30	1.47	1.65	1.87
40	TCG	18.80	17.60	16.50	15.40	14.40	13.30	12.10	10.90
	SDT	71.70	80.80	90.10	99.30	108.50	117.70	126.90	136.00
	KW	0.79	0.90	1.02	1.16	1.30	1.47	1.66	1.87
45	TCG	20.40	19.20	18.10	17.00	15.90	14.70	13.40	12.10
	SDT	73.00	82.10	91.20	100.40	109.60	118.70	127.80	136.90
	KW	0.78	0.90	1.02	1.15	1.30	1.47	1.66	1.88
50	TCG	22.20	21.00	19.80	18.60	17.40	16.10	14.80	13.40
	SDT	74.30	83.30	92.40	101.60	110.70	119.80	128.90	137.90
	KW	0.77	0.89	1.02	1.15	1.30	1.47	1.67	1.89
55	TCG	24.10	22.80	21.50	20.30	19.00	17.70	16.30	14.70
	SDT	75.60	84.60	93.70	102.80	111.90	121.00	130.00	138.90
	KW	0.76	0.88	1.01	1.15	1.30	1.48	1.67	1.89
N4A424CKA									
30	TCG	21.10	19.90	18.70	17.60	16.40	15.20	14.10	12.80
	SDT	69.20	78.60	87.90	97.30	106.80	116.20	125.50	134.80
	KW	1.02	1.17	1.32	1.48	1.67	1.88	2.12	2.41
35	TCG	23.20	21.90	20.60	19.40	18.10	16.90	15.50	14.20
	SDT	70.50	79.80	89.10	98.40	107.80	117.00	126.30	135.60
	KW	1.03	1.17	1.32	1.49	1.67	1.88	2.13	2.41
40	TCG	25.40	24.00	22.70	21.30	20.00	18.60	17.10	15.60
	SDT	71.80	81.10	90.30	99.60	108.80	118.00	127.20	136.40
	KW	1.03	1.17	1.32	1.49	1.67	1.88	2.13	2.41
45	TCG	27.90	26.40	24.90	23.40	21.90	20.40	18.80	17.20
	SDT	73.30	82.40	91.50	100.70	109.90	119.00	128.10	137.20
	KW	1.03	1.18	1.33	1.49	1.67	1.89	2.13	2.41
50	TCG	30.40	28.80	27.30	25.70	24.00	22.40	20.60	18.80
	SDT	74.70	83.70	92.80	101.90	111.00	120.10	129.10	138.20
	KW	1.04	1.18	1.33	1.49	1.68	1.89	2.13	2.41
55	TCG	33.20	31.50	29.80	28.00	26.20	24.40	22.50	20.50
	SDT	76.20	85.20	94.20	103.20	112.20	121.20	130.20	139.20
	KW	1.04	1.18	1.33	1.49	1.68	1.89	2.13	2.41

CONDENSER RATING ONLY (CONT.)

SST deg F		CONDENSER ENTERING AIR TEMPERATURES deg F							
		55	65	75	85	95	105	115	125
N4A430CKA									
30	TCG	24.90	23.60	22.30	20.90	19.60	18.20	16.70	15.20
	SDT	66.80	76.20	85.70	95.20	104.60	114.10	123.50	132.80
	KW	1.27	1.45	1.63	1.83	2.05	2.30	2.59	2.92
35	TCG	27.40	26.00	24.50	23.10	21.60	20.10	18.50	16.80
	SDT	68.00	77.30	86.70	96.20	105.60	114.90	124.20	133.50
	KW	1.28	1.45	1.64	1.83	2.05	2.30	2.59	2.93
40	TCG	30.10	28.60	27.00	25.40	23.80	22.10	20.40	18.60
	SDT	69.20	78.50	87.90	97.20	106.50	115.80	125.00	134.30
	KW	1.28	1.46	1.64	1.84	2.06	2.31	2.60	2.94
45	TCG	33.10	31.40	29.60	27.90	26.20	24.30	22.40	20.50
	SDT	70.60	79.80	89.10	98.30	107.50	116.70	125.90	135.10
	KW	1.29	1.47	1.65	1.84	2.06	2.31	2.60	2.95
50	TCG	36.20	34.40	32.50	30.60	28.70	26.70	24.60	22.40
	SDT	72.10	81.20	90.30	99.50	108.60	117.70	126.90	135.90
	KW	1.30	1.47	1.65	1.84	2.06	2.32	2.61	2.95
55	TCG	39.60	37.60	35.50	33.50	31.40	29.20	26.90	24.60
	SDT	73.60	82.60	91.60	100.70	109.80	118.80	127.90	136.80
	KW	1.30	1.47	1.65	1.85	2.07	2.32	2.61	2.96
N4A436CKA									
30	TCG	36.20	34.20	32.30	30.50	28.70	26.70	24.60	22.20
	SDT	67.10	76.40	85.90	95.30	104.70	114.10	123.50	132.70
	KW	1.80	2.03	2.27	2.54	2.84	3.18	3.57	4.03
35	TCG	39.90	37.60	35.60	33.60	31.60	29.50	27.20	24.60
	SDT	68.40	77.60	86.90	96.30	105.60	114.90	124.20	133.40
	KW	1.83	2.05	2.29	2.55	2.85	3.19	3.58	4.05
40	TCG	43.80	41.40	39.10	36.90	34.70	32.40	29.90	27.10
	SDT	69.70	78.80	88.00	97.20	106.50	115.80	125.00	134.20
	KW	1.85	2.07	2.30	2.56	2.86	3.20	3.60	4.06
45	TCG	48.00	45.40	42.90	40.50	38.00	35.50	32.70	29.70
	SDT	71.00	80.00	89.10	98.30	107.50	116.70	125.90	135.00
	KW	1.87	2.08	2.31	2.57	2.87	3.21	3.61	4.07
50	TCG	52.50	49.60	46.90	44.20	41.60	38.80	35.80	32.50
	SDT	72.40	81.30	90.30	99.40	108.60	117.70	126.80	135.80
	KW	1.90	2.10	2.33	2.58	2.88	3.22	3.62	4.08
55	TCG	57.30	54.10	51.10	48.20	45.30	42.20	38.90	35.40
	SDT	73.90	82.70	91.60	100.60	109.70	118.70	127.70	136.60
	KW	1.93	2.12	2.34	2.60	2.89	3.23	3.63	4.09
N4A448CKA									
30	TCG	41.60	39.40	37.20	35.00	32.70	30.40	27.90	25.20
	SDT	69.10	78.30	87.60	96.90	106.30	115.60	124.80	134.00
	KW	2.16	2.36	2.59	2.88	3.21	3.59	4.02	4.51
35	TCG	45.80	43.30	41.00	38.60	36.10	33.50	30.80	27.90
	SDT	70.50	79.60	88.80	98.10	107.30	116.50	125.70	134.80
	KW	2.17	2.37	2.61	2.89	3.23	3.61	4.05	4.54
40	TCG	50.20	47.60	45.00	42.40	39.80	36.90	34.00	30.70
	SDT	71.90	81.00	90.10	99.30	108.40	117.60	126.70	135.70
	KW	2.18	2.38	2.62	2.91	3.25	3.63	4.07	4.56
45	TCG	55.00	52.20	49.40	46.60	43.60	40.60	37.30	33.80
	SDT	73.50	82.50	91.50	100.60	109.60	118.70	127.70	136.60
	KW	2.18	2.38	2.63	2.92	3.26	3.65	4.09	4.59
50	TCG	60.10	57.10	54.10	51.00	47.80	44.40	40.80	37.00
	SDT	75.20	84.00	93.00	102.00	110.90	119.90	128.80	137.60
	KW	2.18	2.39	2.64	2.94	3.28	3.68	4.12	4.61
55	TCG	65.70	62.40	59.10	55.70	52.20	48.50	44.50	40.40
	SDT	76.90	85.70	94.60	103.50	112.40	121.20	130.00	138.70
	KW	2.18	2.39	2.65	2.95	3.30	3.70	4.15	4.64

CONDENSER RATING ONLY (CONT.)

SST deg F		CONDENSER ENTERING AIR TEMPERATURES deg F							
		55	65	75	85	95	105	115	125
N4A460CKA									
30	TCG	54.20	51.50	48.70	45.90	43.00	39.90	36.60	33.10
	SDT	71.00	80.30	89.60	98.90	108.20	117.50	126.60	135.70
	KW	2.72	2.99	3.31	3.69	4.13	4.63	5.21	5.86
35	TCG	59.70	56.70	53.70	50.70	47.50	44.20	40.60	36.70
	SDT	72.60	81.80	91.10	100.30	109.50	118.60	127.70	136.70
	KW	2.75	3.02	3.34	3.73	4.17	4.68	5.26	5.91
40	TCG	65.60	62.30	59.10	55.80	52.30	48.60	44.80	40.60
	SDT	74.30	83.40	92.60	101.70	110.80	119.90	128.90	137.80
	KW	2.77	3.05	3.38	3.77	4.21	4.73	5.31	5.97
45	TCG	71.90	68.40	64.80	61.20	57.40	53.40	49.20	44.70
	SDT	76.20	85.20	94.20	103.20	112.20	121.20	130.10	138.90
	KW	2.79	3.08	3.41	3.80	4.26	4.78	5.36	6.02
50	TCG	78.70	74.80	71.00	67.00	62.90	58.50	53.90	49.00
	SDT	78.10	87.00	95.90	104.80	113.80	122.60	131.40	140.10
	KW	2.81	3.10	3.44	3.84	4.30	4.83	5.42	6.08
55	TCG	85.90	81.70	77.50	73.20	68.60	63.90	58.90	53.50
	SDT	80.10	88.90	97.70	106.60	115.40	124.10	132.80	141.30
	KW	2.82	3.12	3.47	3.88	4.34	4.87	5.47	6.13

ACCESSORY USAGE GUIDELINE

Accessory	REQUIRED FOR LOW−AMBIENT COOLING APPLICATIONS (Below 55°F / 12.8°C)	REQUIRED FOR LONG LINE APPLICATIONS*	REQUIRED FOR SEA COAST APPLICATIONS (Within 2 miles / 3.22 km)
Compressor Start Assist Capacitor and Relay	Yes	Yes	No
Crankcase Heater	Yes	Yes	No
Evaporator Freeze Thermostat	Yes	No	No
Hard Shutoff TXV	Yes	Yes‡	No
Liquid Line Solenoid Valve	No	See Long−Line Application Guideline	No
Low Ambient Switch	Yes	No	No
Support Feet	Recommended	No	Recommended
Winter Start Control	Yes	No	No

* For tubing line sets between 80 and 200 ft. (24.38 and 60.96 m) and/or 20 ft. (6.09 m) vertical differential, refer to Residential Split−System Longline Application Guideline.
‡ TXV required beyond 20 ft. (6.1 m) vertical separation or 50 ft. (15.2 m) total length.

ACCESSORIES

Part Number	Description	Used On Model Size						
		18	24	30	36	42	48	60
NASA001AC	Anti−Cycle Timer (5 minute delay)	X	X	X	X	X	X	X
NASA001TD	Time Delay Relay, Indoor Blower	X	X	X	X	X	X	X
NASA001CH	Crankcase Heater for Compressor					X	X	
NASA003CH	Crankcase Heater for Compressor	X	X	X	X			
NASA00201FS	Evaporator Freeze Thermostat	X	X	X	X	X	X	X
NASA003SC	Hard Start Kit (Capacitor & Relay)					X		
NASA005SC	Hard Start Kit (Capacitor & Relay)	X	X	X	X		X	X
NASA001SC	Start Component − PTC Device		X	X	X	X	X	X
NASA401LS	Solenoid Valve Kit	X	X	X	X	X	X	X
NASA401LA	Low Ambient Kit (Pressure Switch)	X	X	X	X	X	X	X
NASA403PS	Low Pressure Switch Kit	X	X	X	X	X	X	X
NASA404PS	High Pressure Switch Kit	X	X	X	X	X	X	X
NASA00201WS*	Winter Start Kit	X	X	X	X	X	X	X
NASA001SJ	Sound Jacket, Compressor	X	X	X	X	X	X	
NASA003SJ	Sound Jacket, Compressor							X
NASA001SF	Support Feet		X	X	X	X	X	X
NASA00201SF	Support Feet	X						
EBAC05TXVX	TXV Kit, R−410A − 2005−2009 R−22 TXV Fancoils (air handlers)	X	X					
EBAC06TXVX	TXV Kit, R−410A − 2005−2009 R−22 TXV Fancoils (air handlers)			X	X	X		
EBAC07TXVX	TXV Kit, R−410A − 2005−2009 R−22 TXV Fancoils (air handlers)						X	X

* Use in conjunction with Low Pressure Switch

Copyright 2015 International Comfort Products
Lewisburg, Tennessee 37091 USA
www.GoTempstar.com
Specifications subject to change without notice.