# F95CSU
# Up to 95% AFUE, Single-Stage, Variable Speed Communicating, Ultra Low NOx Emissions 35-in. (889 mm) Tall, Condensing Gas Furnace

Arcoaire® Air Conditioning & Heating

# Product Specifications

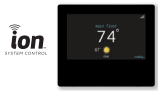


**SYST0101CW Recommended (sold separately)**

A200355

Illustrations and photographs are only representative. Some product models may vary.

## ⚠ WARNING

**CARBON MONOXIDE POISONING AND FIRE HAZARD**

Failure to follow this warning could result in personal injury, death, and/or property damage.

This furnace is not designed for use in recreation vehicles, manufactured (mobile) homes or outdoors.

Failure to follow this warning could result in personal injury, death, and/or property damage.

Use of the AHRI Certified TM Mark indicates a manufacturer's participation in the program. For verification of certification for individual products, go to www.ahridirectory.org .

ISO 9001 Quality

A200326

## EASIER TO SELL

- Up to 95.0% AFUE
- ION™ Communicating Control System, approved for installations up to 5,400 ft.
- Variable-speed, constant airflow ECM blower motor for extra SEER boost with select cooling equipment and single-stage gas valve
- Supports single-stage, two-stage and variable speed cooling units
- Dehumidification feature in cooling
- Ultra Low NOx - meets the nitrogen oxides (NOx) emission limit of 14 nanograms/joulPe for the South Coast Air Quality Management District and San Joaquin Valley Air Pollution Control District in California
- Cabinet air leakage less than 2.0% at 1.0 in. W.C. and cabinet air leakage less than 1.4% at 0.5 in. W.C. when tested in accordance with ASHRAE standard 193

## TOUGHER

- Stainless steel tubular heat exchanger
- Stainless steel condensing secondary heat exchanger
- Enclosed pre-mix burner with variable speed inducer
- Adjustable heating blower OFF delay
- Factory set blower ON delay
- High temperature limit control designed to prevent overheating
- Pilot free, hot surface igniter
- High quality, corrosion-resistant, prepainted steel cabinet

## QUIETER

- Variable speed, constant airflow ECM blower motor
- Fully insulated steel cabinet

## EASIER TO INSTALL AND SERVICE

- Direct vent (2-pipe), single-pipe venting or ventilated combustion air
- Condensate trap with 6-3/8" (7-3/8" recommended) clearance in horizontal applications
- Quarter turn knobs for easy door removal and secure attachment
- Three position - upflow and horizontal (left/right) installation
- Factory configured to use natural gas, not convertible to Liquid Propane
- Concentric vent available
- Slide out blower assembly with extra long harness

## LIMITED WARRANTY*

- 5 year No Hassle Replacement™ limited warranty
- Lifetime heat exchanger limited warranty with timely registration
- 5 year parts limited warranty
  - With timely registration, an additional 5 year parts limited warranty
  - * For residential applications only. See warranty certificate for complete details and restrictions, including warranty coverage for other applications.

| FURNACE SIZE | CASING DIMENSIONS (IN.) | | | RATED HEATING OUTPUT (BTUH)* | AFUE | ENERGY STAR | HEATING AIRFLOW | | COOLING CFM @ 0.5 ESP (in. W.C.) | MOTOR HP |
|---|---|---|---|---|---|---|---|---|---|---|
| | H | D | W | | UPFLOW/ HZ | | CFM Heating | Heating ESP (in. W.C.) | | |
| F95CSU0601716 | 35 | 29.50 | 17.50 | 58,000 | 95.0% | YES | .12 | 1034 | 1385 | 1/2 |
| F95CSU0802120 | 35 | 29.50 | 21.00 | 78,000 | 95.0% | YES | .12 | 1406 | 2195 | 1 |
| F95CSU1002122 | 35 | 29.50 | 21.00 | 97,000 | 95.0% | YES | .15 | 1805 | 2225 | 1 |

*. Capacity in accordance with DOE test procedures. Ratings are position dependent. See rating plate.
ESP - External Status Pressure

# MODEL NUMBER NOMENCLATURE

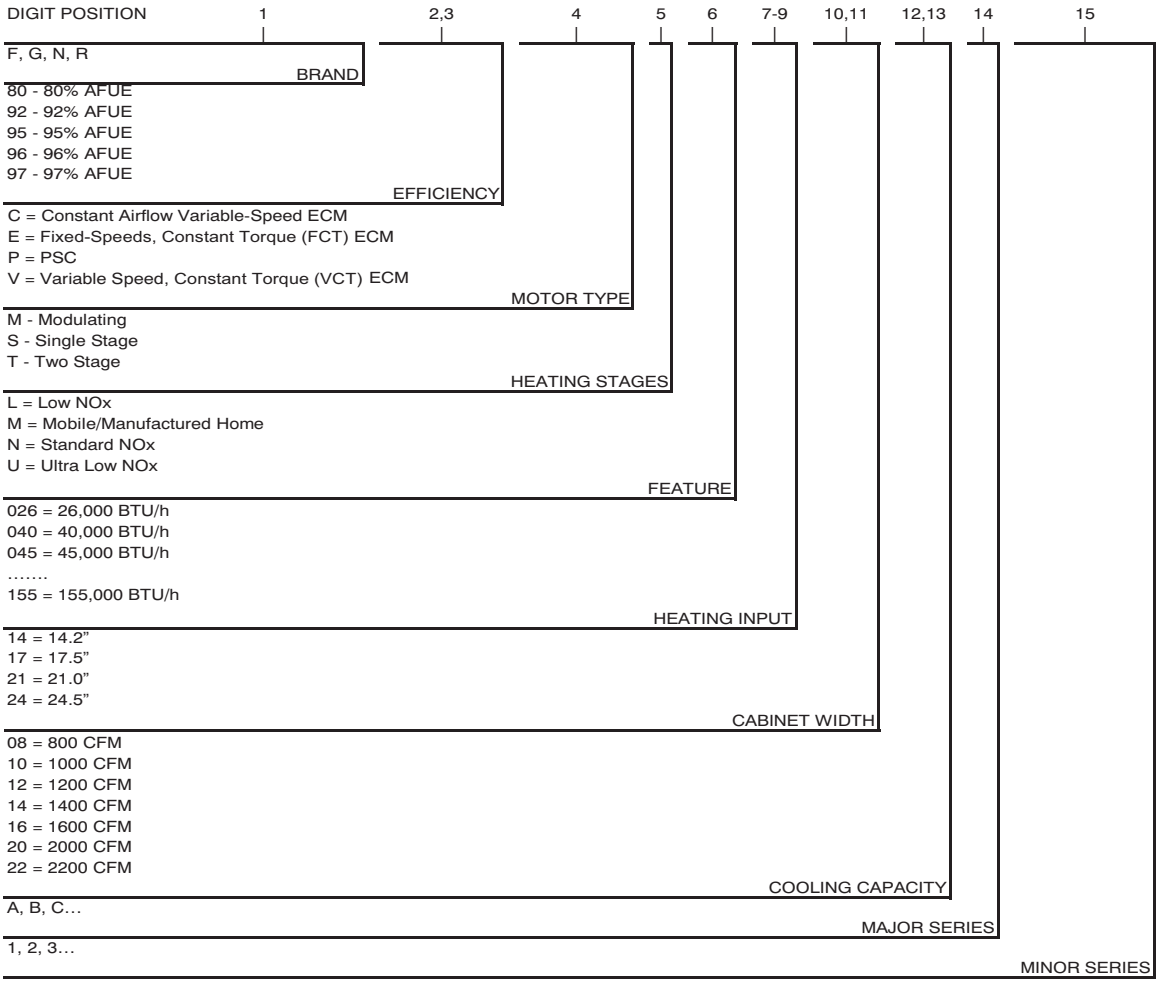


A190043

# FURNACE COMPONENTS

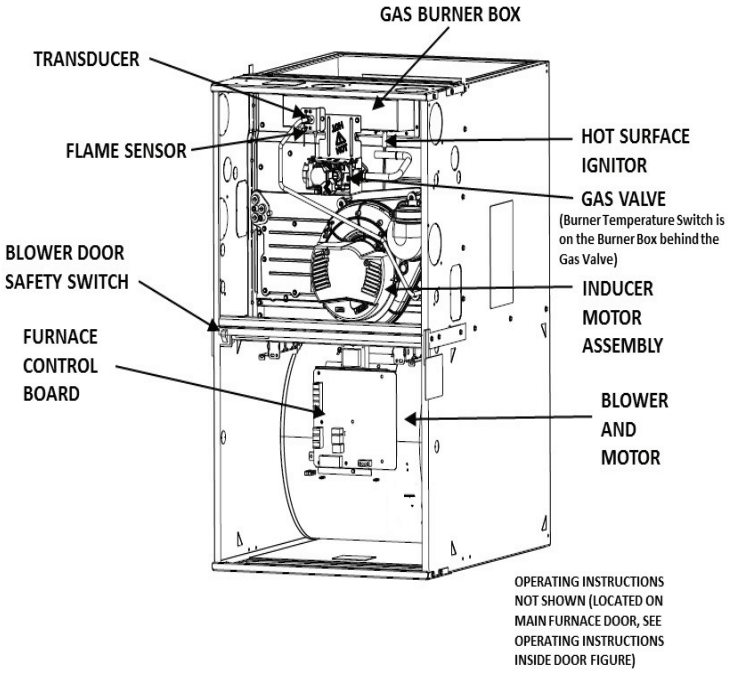


A200121

# DIMENSIONAL DRAWING

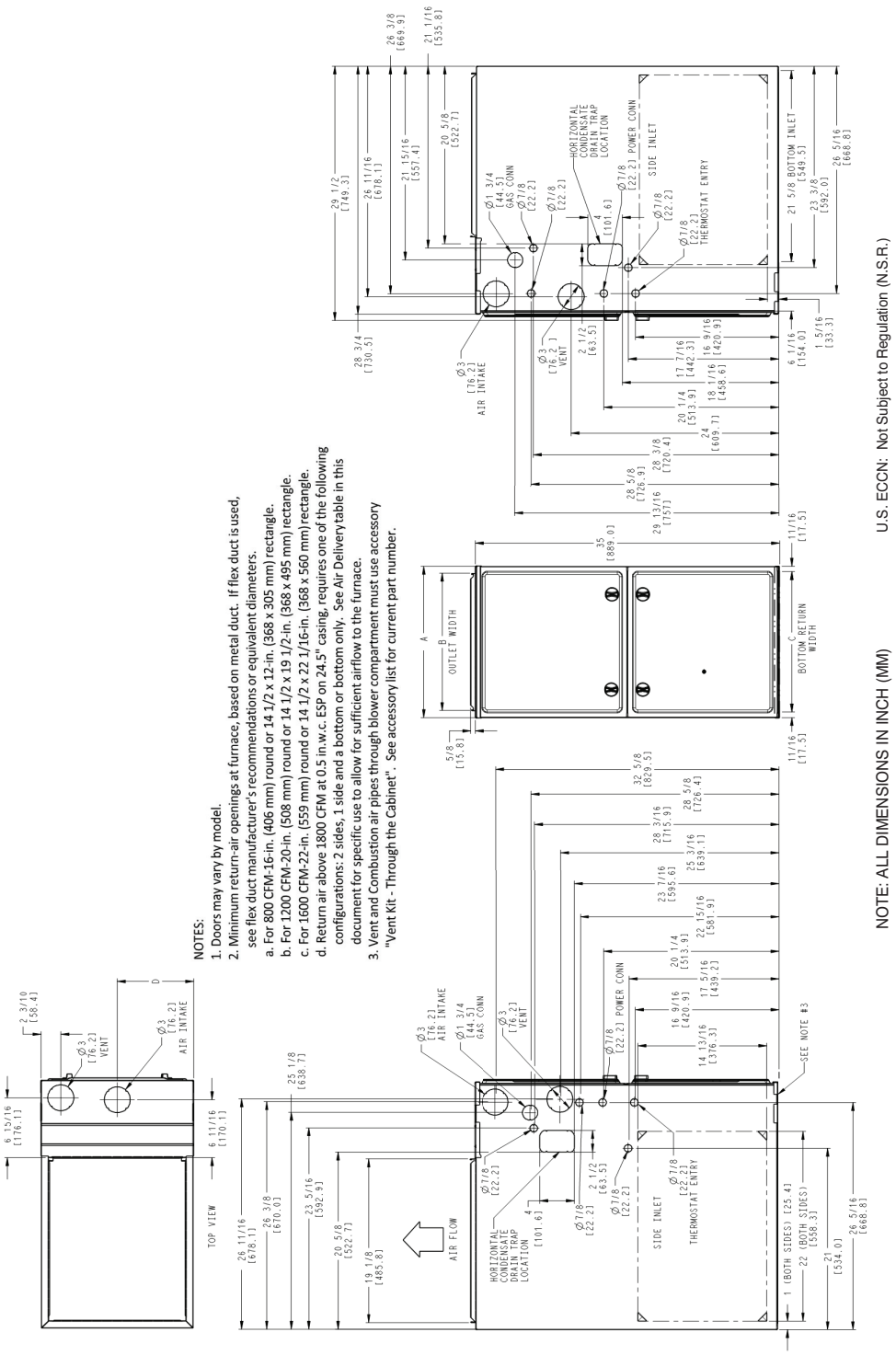


A200327

| FURNACE SIZE | A | B | C | D | SHIP WT. |
|---|---|---|---|---|---|
| | CABINET WIDTH | OUTLET WIDTH | BOTTOM INLET WIDTH | AIR INTAKE | LB (KG) |
| 0601716 | 17-1/2 (445) | 15-7/8 (403) | 16 (406) | 8-3/4 (222) | 149.6 (67.9) |
| 0802120 | 21 (533) | 19-3/8 (492) | 19-1/2 (495) | 10-1/2 (267) | 173.1 (78.5) |
| 1002122 | 21 (533) | 19-3/8 (492) | 19-1/2 (495) | 10-1/2 (267) | 180.0 (81.6) |

**Manufacturer reserves the right to change, at any time, specifications and designs without notice and without obligations.**

## MINIMUM CLEARANCES TO COMBUSTIBLE MATERIALS

| POSITION | CLEARANCE |
|---|---|
| Rear | 1 in. |
| Front (Combustion air openings in furnace and in structure) | 1 in. |
| Required for service* | 24 in.† |
| All Sides of Supply Plenum* | 1 in. |
| Sides | 1 in.* |
| Vent | 0 |
| Top of Furnace | 1 in. |

*. Additional clearance is required for condensate trap installation.
†. Consult your local building codes.

## SPECIFICATIONS

| **Heating Capacity and Efficiency** | | **0601716** | **0802120** | **1002122** |
|---|---|---|---|---|
| Input | Heat (BTUH) | 60,000 | 80,000 | 100,000 |
| Output | Heat (BTUH) | 58,000 | 78,000 | 97,000 |
| Certified Temperature Rise Range ºF (ºC) | Heating | 35 - 65 (19 - 36) | 35 - 65 (19 - 36) | 35 - 65 (19 - 36) |
| **Airflow Capacity and Blower Data** | | | | |
| Rated External Static Pressure (in. w.c.) | Heating | 0.12 | 0.12 | 0.15 |
| | Cooling | 0.50 | 0.50 | 0.50 |
| Airflow Delivery @ Rated ESP (CFM) | Heating | 1034 | 1406 | 1805 |
| | Cooling | 1385 | 2195 | 2225 |
| Cooling Capacity (tons) @ 400, 350 CFM/ton | 400 CFM/ton | 3.5 | 5 | 5 |
| | 350 CFM/ton | 4 | 5.5 | 5.5 |
| Direct-Drive Motor Type | | Electronically Commutated Motor (ECM) | | |
| Direct-Drive Motor HP | | 1/2 | 1 | 1 |
| Motor Full Load Amps Default | | 7.7 | 10 | 10 |
| RPM Range | | 400 - 1200 | 400 - 1200 | 400 - 1200 |
| Blower Wheel Dia x Width | in. | 11 x 8 | 11 x 8 | 11 x 10 |
| Air Filtration System | | Field Supplied Filter | | |
| Filter Used for Certified Watt Data | | 325531-40* | | |
| **Electrical Data** | | | | |
| Input Voltage | Volts-Hertz-Phase | 115 - 60 - 1 | | |
| Operating Voltage Range | Min-Max | 104 - 127 | | |
| Maximum Input Amps Default | Amps | 11.4 | 14.3 | 14.3 |
| Unit Ampacity Default | Amps | 12.6 | 15.4 | 15.4 |
| Minimum Wire Size Default | AWG | 14 | 12 | 12 |
| Maximum Wire Length @ Minimum Wire Size Default | Feet | 29 | 37 | 37 |
| | (M) | (8.8) | (11.3) | (11.3) |
| Maximum Fuse/Ckt Bkr (Time-Delay Type Recommended) Default | Amps | 15 | 20 | 20 |
| Transformer Capacity (24vac output) | | 40 VA | | |
| External Control Power Available | Heating | 23.2 VA | | |
| | Cooling | 32.8 VA | | |
| **Controls** | | | | |
| Gas Connection Size | | 1/2” NPT | | |
| Gas Valve (Redundant) | Manufacturer | White Rodgers | | |
| Minimum Inlet Gas pressure (in. wc) | | 4.5 | | |
| Maximum Inlet Gas pressure (in. wc) | | 13.6 | | |
| Manufactured (Mobile) Home Kit | | Not approved for Manufacture (Mobile) Home use | | |
| Ignition Device | | Silicon Nitride | | |
| Heating Blower Control (Heating Off-Delay) | | Adjustable: 90, 120, 150, 180 seconds | | |
| Cooling Blower Control (Time Delay Relay) | | 90 seconds | | |
| Communication System | | ION™ Communicating SYS0101CW | | |
| Thermostat Connections | | W/W1 Y1 and Y/Y2, DHUM, G, COM24V, R | | |
| Accessory Connections | | EAC (115vac), DHUM (24vac), 1-stg AC (via Y!) | | |

**Manufacturer reserves the right to change, at any time, specifications and designs without notice and without obligations.**

# ACCESSORIES

| DESCRIPTION | PART NUMBER | 0601716 | 0802120 | 1002122 |
|---|---|---|---|---|
| Trap Offset Adapter Kit - Upflow with Right Side Return (10 pack) | AGACDKTUA10A | X | X | X |
| Vent Terminal - Concentric - 2” (51 mm) | NAHA002CV | See Venting Tables | | |
| Vent Terminal - Concentric - 3” (76 mm) | NAHA001CV | | | |
| Vent Terminal Bracket - 2” (51 mm) | NAHA00301VT | | | |
| Vent Terminal Bracket - 3” (76 mm) | NAHA00401VT | | | |
| Vent Kit - Rubber Coupling | NAHA00101CK | | | |
| Freeze Protect Kit - Condensate Drain Line Tape | NAHA00101HH | X | X | X |
| CPVC to PVC Drain Adapters - 1/2” CPVC to 3/4” PVC (10 pack) | NAHA0110DA | X | X | X |
| Horizontal Trap Grommet - Direct Vent | NAHA00101HV | X | X | X |
| Condensate Neutralizer Kit | NAHA001NK | X | X | X |
| Return Air Base (Upflow Applications) 17.5-in. wide | NAHA01701RA | X | - | - |
| Return Air Base (Upflow Applications) 21.05-in. wide | NAHA02101RA | - | X | X |
| Gas Valve Tower Port Adapter Kit* | 1188594 | X | X | X |
| External Bottom Return Filter Rack* | FHG1625-2 | X | - | - |
| | FHG2025-2 | - | X | X |
| Washable Unframed Filter 3/4-in. (19 mm)* | 325531-402 | X | - | - |
| | 325531-403 | - | X | X |
| ION™ Control System | SYST0101CW | X | X | X |
| **Coil Adapter Kits (see Installation Instructions for coil requirements)** | | | | |
| Coil Adapter Kits - No Offset | NAHB00101CA | X | X | X |
| Coil Adapter Kits - Single Offset | NAHB00201CA | X | X | X |
| Coil Adapter Kits - Double Offset | NAHB00301CA | X | X | X |

*. Purchased through FAST Parts
X Used with the model furnace

# AIR DELIVERY

**Air Delivery - CFM (With Filter)**

| COOLING[4] AND HEATING AIR DELIVERY - CFM (Bottom Return with Filter) | | | | | | | | | | | | | |
|---|---|---|---|---|---|---|---|---|---|---|---|---|---|
| (SW1-5 and SW4-3 set to OFF, except as indicated. See Notes 1 and 2.) | | | | | | | | | | | | | |
| Unit Size: 0601716 | Clg/CF Switch settings | | | External Static Pressure (ESP) | | | | | | | | | |
| Clg Switches: | SW2-3 | SW2-2 | SW2-1 | 0.1 | 0.2 | 0.3 | 0.4 | 0.5 | 0.6 | 0.7 | 0.8 | 0.9 | 1.0 |
| Clg Default: | OFF | OFF | OFF | 1300 | 1295 | 1300 | 1300 | 1295 | 1290 | 1280 | 1265 | 1240 | 1200 |
| CF Switches | SW3-3 | SW3-2 | SW3-1 | | | | | | | | | | |
| Low-Clg Default: | OFF | OFF | OFF | 1300 | 1295 | 1300 | 1300 | 1295 | 1290 | 1280 | 1265 | 1240 | 1200 |
| Cooling (SW2) Low-Cooling (SW3) | OFF | OFF | ON | 545 | 545 | 540 | Note 4 | | | | | | |
| | OFF | ON | OFF | 710 | 720 | 720 | 725 | 720 | Note 4 | | | | |
| | OFF | ON | ON | 895 | 910 | 920 | 920 | 920 | 915 | 895 | 885 | Note 4 | |
| | ON | OFF | OFF | 1090 | 1105 | 1115 | 1120 | 1120 | 1120 | 1110 | 1100 | 1095 | 1080 |
| | ON | OFF | ON | 1300 | 1295 | 1300 | 1300 | 1295 | 1290 | 1280 | 1265 | 1240 | 1200 |
| | ON | ON | OFF | 1470 | 1465 | 1455 | 1420 | 1385 | 1350 | 1315 | 1275 | 1240 | 1200 |
| | ON | ON | ON | 1470 | 1465 | 1455 | 1420 | 1385 | 1350 | 1315 | 1275 | 1240 | 1200 |
| | Maximum Clg Airflow[2] | | | 1515 | 1480 | 1455 | 1420 | 1385 | 1350 | 1315 | 1275 | 1240 | 1200 |
| CF Switches | SW3-3 | SW3-2 | SW3-1 | | | | | | | | | | |
| Cont. Fan Default: | OFF | OFF | OFF | 545 | 545 | 540 | Note 4 | | | | | | |
| Continuous Fan (SW3) | OFF | OFF | ON | 545 | 545 | 540 | Note 4 | | | | | | |
| | OFF | ON | OFF | 710 | 720 | 720 | 725 | 720 | Note 4 | | | | |
| | OFF | ON | ON | 895 | 910 | 920 | 920 | 920 | 915 | 895 | 885 | Note 4 | |
| | ON | OFF | OFF | 895 | 910 | 920 | 920 | 920 | 915 | 895 | 885 | Note 4 | |
| | ON | OFF | ON | 895 | 910 | 920 | 920 | 920 | 915 | 895 | 885 | Note 4 | |
| | ON | ON | OFF | 895 | 910 | 920 | 920 | 920 | 915 | 895 | 885 | Note 4 | |
| | ON | ON | ON | 895 | 910 | 920 | 920 | 920 | 915 | 895 | 885 | Note 4 | |
| | | | | | | | | | | | | | |
| Heating (SW1) | Heat Airflow[3] | | | 1035 | 1030 | 1035 | 1035 | 1040 | 1035 | 1035 | 1025 | 1015 | 1005 |

## Air Delivery - CFM (With Filter) (Continued)

| COOLING[4] AND HEATING AIR DELIVERY - CFM (Bottom Return with Filter) | | | | | | | | | | | | | |
|---|---|---|---|---|---|---|---|---|---|---|---|---|---|
| (SW1-5 and SW4-3 set to OFF, except as indicated. See Notes 1 and 2.) | | | | | | | | | | | | | |
| Unit Size: 0802120[5] | Clg/CF Switch settings | | | External Static Pressure (ESP) | | | | | | | | | |
| Clg Switches: | SW2-3 | SW2-2 | SW2-1 | 0.1 | 0.2 | 0.3 | 0.4 | 0.5 | 0.6 | 0.7 | 0.8 | 0.9 | 1.0 |
| Clg Default: | OFF | OFF | OFF | 1825 | 1830 | 1830 | 1825 | 1825 | 1825 | 1815 | 1810 | 1805 | 1785 |
| CF Switches | SW3-3 | SW3-2 | SW3-1 | | | | | | | | | | |
| Cooling (SW2) Low-Cooling (SW3) | OFF | OFF | ON | 695 | 700 | Note 4 | | | | | | | |
| | OFF | ON | OFF | 870 | 885 | 880 | 880 | Note 4 | | | | | |
| | OFF | ON | ON | 1045 | 1060 | 1070 | 1070 | 1070 | 1070 | Note 4 | | | |
| | ON | OFF | OFF | 1310 | 1315 | 1315 | 1315 | 1310 | 1300 | 1290 | 1280 | Note 4 | |
| | ON | OFF | ON | 1470 | 1475 | 1480 | 1480 | 1480 | 1475 | 1465 | 1460 | 1450 | 1440 |
| | ON | ON | OFF | 1825 | 1830 | 1830 | 1825 | 1825 | 1825 | 1815 | 1810 | 1805 | 1785 |
| | ON | ON | ON | 2170 | 2180 | 2180 | 2175 | 2170 | 2150 | 2080 | 1995 | 1915 | 1825 |
| | Maximum Clg Airflow[2] | | | 2230 | 2225 | 2235 | 2230 | 2195 | 2165 | 2110 | 2020 | 1935 | 1845 |
| CF Switches | SW3-3 | SW3-2 | SW3-1 | | | | | | | | | | |
| Cont. Fan Default: | OFF | OFF | OFF | 695 | 700 | Note 4 | | | | | | | |
| Continuous Fan (SW3) | OFF | OFF | ON | 695 | 700 | Note 4 | | | | | | | |
| | OFF | ON | OFF | 870 | 885 | 880 | 880 | Note 4 | | | | | |
| | OFF | ON | ON | 870 | 885 | 880 | 880 | Note 4 | | | | | |
| | ON | OFF | OFF | 870 | 885 | 880 | 880 | Note 4 | | | | | |
| | ON | OFF | ON | 870 | 885 | 880 | 880 | Note 4 | | | | | |
| | ON | ON | OFF | 870 | 885 | 880 | 880 | Note 4 | | | | | |
| | ON | ON | ON | 870 | 885 | 880 | 880 | Note 4 | | | | | |
| | | | | | | | | | | | | | |
| Heating (SW1) | Heat Airflow[3] | | | 1425 | 1430 | 1435 | 1435 | 1435 | 1425 | 1420 | 1410 | 1400 | 1390 |
| | | | | | | | | | | | | | |
| Unit Size: 1002122[6] | Clg/CF Switch settings | | | External Static Pressure (ESP) | | | | | | | | | |
| Clg Switches: | SW2-3 | SW2-2 | SW2-1 | 0.1 | 0.2 | 0.3 | 0.4 | 0.5 | 0.6 | 0.7 | 0.8 | 0.9 | 1.0 |
| Clg Default: | OFF | OFF | OFF | 1765 | 1775 | 1790 | 1805 | 1810 | 1820 | 1820 | 1820 | 1820 | 1820 |
| CF Switches | SW3-3 | SW3-2 | SW3-1 | | | | | | | | | | |
| Cooling (SW2) Low-Cooling (SW3) | OFF | OFF | ON | 630 | Note 4 | | | | | | | | |
| | OFF | ON | OFF | 805 | 830 | Note 4 | | | | | | | |
| | OFF | ON | ON | 1065 | 1075 | 1080 | 1085 | Note 4 | | | | | |
| | ON | OFF | OFF | 1240 | 1250 | 1265 | 1270 | 1270 | Note 4 | | | | |
| | ON | OFF | ON | 1410 | 1415 | 1435 | 1445 | 1450 | 1455 | 1460 | Note 4 | | |
| | ON | ON | OFF | 1765 | 1775 | 1790 | 1805 | 1810 | 1820 | 1820 | 1820 | 1820 | 1820 |
| | ON | ON | ON | 2115 | 2115 | 2125 | 2140 | 2145 | 2150 | 2145 | 2140 | 2080 | 1985 |
| | Maximum Clg Airflow[2] | | | 2165 | 2185 | 2200 | 2215 | 2225 | 2240 | 2250 | 2210 | 2120 | 2030 |
| CF Switches | SW3-3 | SW3-2 | SW3-1 | | | | | | | | | | |
| Cont. Fan Default: | OFF | OFF | OFF | 630 | Note 4 | | | | | | | | |
| Continuous Fan (SW3) | OFF | OFF | ON | 630 | Note 4 | | | | | | | | |
| | OFF | ON | OFF | 805 | 830 | Note 4 | | | | | | | |
| | OFF | ON | ON | 1020 | 1040 | 1050 | Note 4 | | | | | | |
| | ON | OFF | OFF | 1020 | 1040 | 1050 | Note 4 | | | | | | |
| | ON | OFF | ON | 1020 | 1040 | 1050 | Note 4 | | | | | | |
| | ON | ON | OFF | 1020 | 1040 | 1050 | Note 4 | | | | | | |
| | ON | ON | ON | 1020 | 1040 | 1050 | Note 4 | | | | | | |
| | | | | | | | | | | | | | |
| Heating (SW1) | Heat Airflow[3] | | | 1790 | 1800 | 1815 | 1830 | 1835 | 1845 | 1850 | 1850 | 1855 | 1855 |

**NOTES for Cooling and Heating Air Delivery - CFM (Bottom Return with Filter)**

1. Nominal 350 CFM/ton cooling airflow is delivered with SW1-5 and SW4-3 set to OFF.
   Set both SW1-5 ON for nominal 400 CFM/ton (+15% airflow).
   Set SW4-3 to ON for nominal 325 CFM/ton (-7%).
   Set SW1-5 to OFF and SW4-3 to ON for nominal 370 CFM/ton (+7% airflow)
   The above adjustments in airflow are subject to motor horsepower range/capacity
   This applies to Cooling and Low-Cooling airflow, but does not affect continuous fan airflow.
2. Maximum cooling airflow is achieved when switches SW2-3, SW2-2, SW2-1 and SW1-5 are set to ON, and SW4-3 is set to OFF.
3. All heating CFM's are when comfort/efficiency adjustment switch SW1-4 is set to OFF.
4. Ductwork must be sized for high-heating CFM within the operational range of ESP. Operation within the blank areas of the chart is not recommended because high-heat operation will be above 1.0 ESP.
5. All airflows on noted casing size furnaces are 5% less on side-return only installations.
6. Side returns for noted models require two sides, or a side and bottom to allow sufficient airflow at the return of the furnace.
7. Airflows over 1800 CFM require bottom return, two-side return, or bottom and side return or excessive watt draw may result. A minimum filter size of 20x25" (508 x 635 mm) is required.

# INSTALLATION CONSIDERATIONS

Refer to Installation Instructions for complete installation requirements.

## Evaporator Coil Spacer or Shield Requirements

| Type of Coil | Install Flush to Furnace | Install with 8-in. Spacer | Install with Metal Shield |
|---|---|---|---|
| Furnace Manufacturer's N Coil | Allowed | Not Required | Not Required |
| Furnace Manufacturer's A Coil | Not Allowed | Allowed (Except 100k BTU size in Horizontal Right - MUST use shield) | Allowed (See Note 2) |
| 3rd Party Coil - Factory Shielded (See Note 1) | Allowed | Not Required | Not Required |
| 3rd Party Coil - Unshielded | Not Allowed | Allowed (Except 100k BTU size in Horizontal Right - MUST use shield) | Allowed (See Note 3) |

**NOTE:**

1. 3rd Party Coils that are factory-supplied with a metallic shield over the plastic composite drain pan must completely shield all plastic composite materials from direct exposure to any part of the heat exchanger. Consult with 3rd Party Manufacturer to ensure coil is properly shielded. Coils that are only partially shielded should be treated as un-shielded and require a spacer.
2. Field-fabricated metallic shield must completely shield all plastic composite materials from direct exposure to any part of the heat exchanger. Coils that are only partially shielded should be treated as un-shielded and require a spacer.
3. For 3rd party unshielded coils, consult manufacturer for design of a field-fabricated shield that completely shields all plastic composite materials from direct exposure to any part of the heat exchanger.

# 6-3/8" CONDENSATE TRAP (7-3/8" RECOMMENDED) CLEARANCES

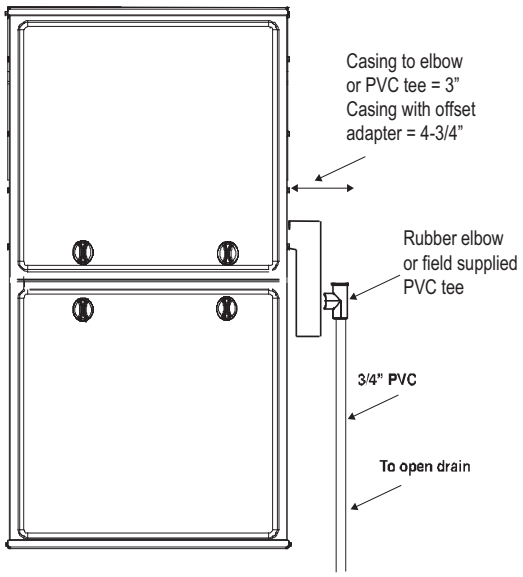


A200084

**Trap Clearance in Upflow Application**

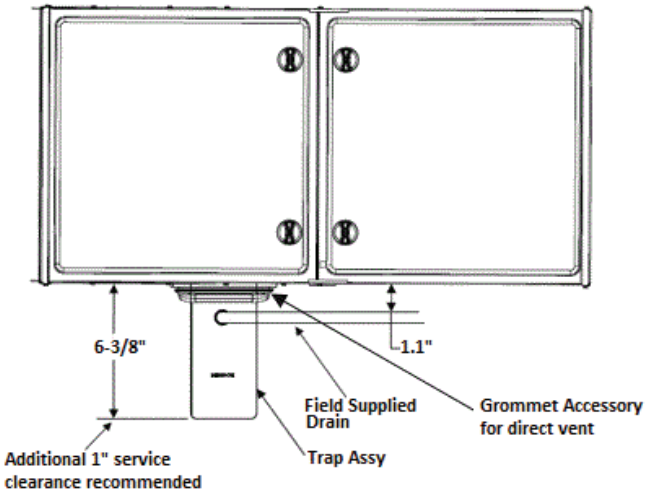


A200066

**Trap Clearance in Horizontal Application**
**(Note: Drain line can be run horizontally or vertically)**

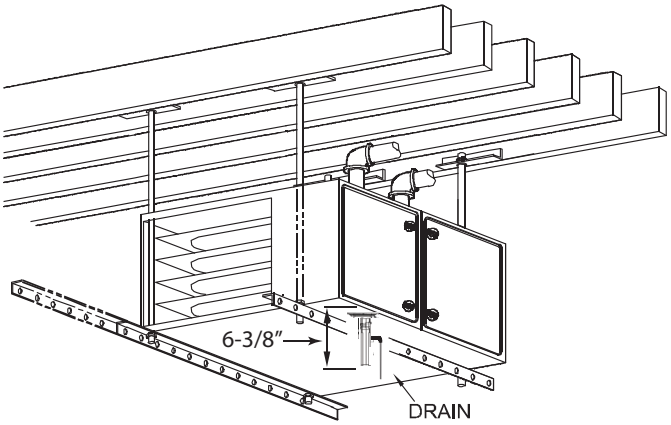


A200083

**Trap Clearance in Horizontal Application**

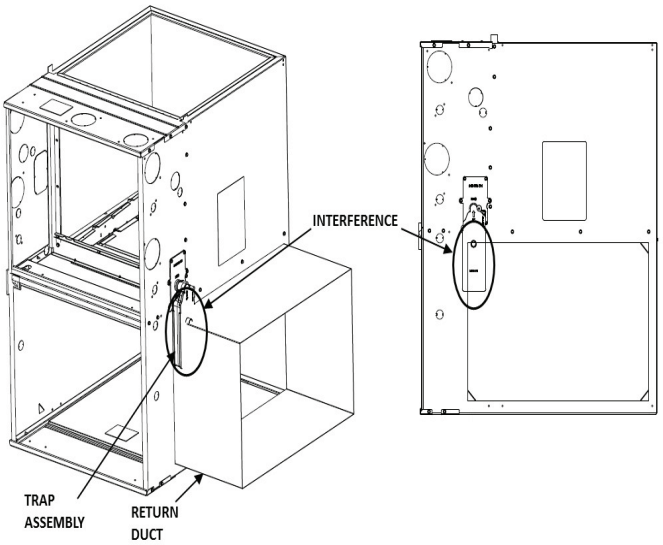


A200119

**Upflow Right Side Return Configuration - Trap Interference**

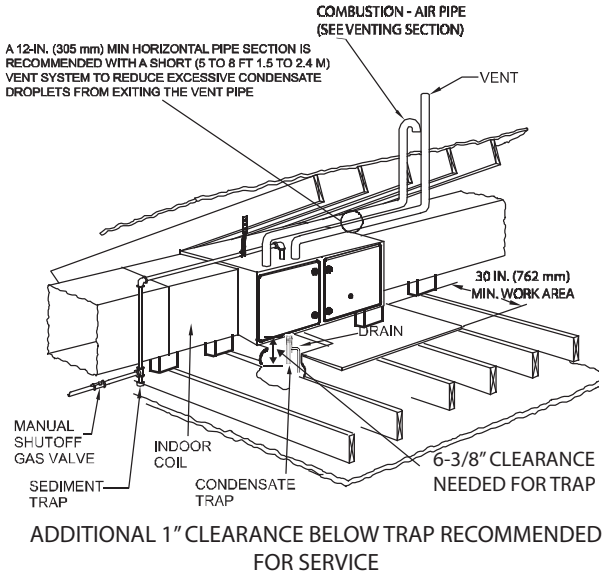


A200088

**Working Platform for Attic Installation**

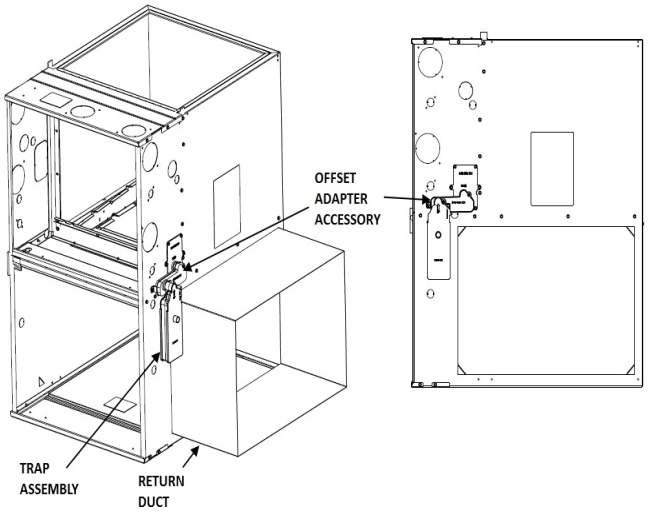


A200120

**Upflow Right Side Return Configuration - Required Upflow Offset Installation**

© 2020 Carrier. All rights reserved.