G80VTL
Two-Stage, Variable Speed, Non-Communicating, Non-Condensing, Gas Furnace

ICP COMMERCIAL

Product Specifications

A210109

⚠ WARNING

This furnace is not designed for use in mobile homes, trailers, or recreational vehicles. Such use could result in property damage and/or death.

EASIER TO SELL

- 80% AFUE
- Cabinet air leakage less than 2.0% at 1.0 in. W.C. and cabinet air leakage less than 1.4% at 0.5 in. W.C. when tested in accordance with ASHRAE standard 193
- Supports two-stage cooling units
- Flame roll-out sensors standard
- Category I venting
- Blocked vent switch
- Dehumidification feature in cooling
- 24 VAC humidifier terminal
- Electronic air cleaner terminal
- All units can be installed in air quality management districts with a 40 ng/J NOx emissions requirements

TOUGHER

- Variable speed ECM blower motor
- Adjustable heating blower OFF delay
- Factory set blower ON delay
- RPJ aluminized steel heat exchanger
- High temperature limit control prevents overheating
- Direct ignition with Silicon Nitride igniter
- One piece prepainted steel cabinet

QUIETER

- Two-stage heating operation
- Two-stage induced draft blower
- In-shot burners
- Insulated blower compartment

EASIER TO INSTALL AND SERVICE

- 33-1/3” (847mm) high, for ease of installation
- Quarter turn knobs for easy door removal and secure attachment
- Convertible to propane gas conversion accessory kit
- Twinning capable with accessory kit
- Four position - upflow/downflow/horizontal (left/right) installation
- Three position vent elbow capability
- Through the casing flue pipe for counterflow applications
- Common venting with other Category I appliances
- Masonry chimney adapter available
- Self diagnostics
- Slide out blower assembly

LIMITED WARRANTY*

- 5 year No Hassle Replacement™ limited warranty
- Lifetime heat exchanger limited warranty with timely registration
- 5 year parts limited warranty

- With timely registration, an additional 5 year parts limited warranty

* For residential applications only, See warranty certificate for complete details and restrictions, including warranty coverage of other

Model Number	Input (BTUh)	Efficiency AFUE	Cooling Capacity CFM range @ .5 in. w.c. (125 Pa)	Dimensions H x W x D Inches (Millimeters)	Shipping Wt. Lbs (Kg)
G80VTL0451412	44,000	80%	410 - 1175	33-1/3 x 14-3/16 x 29 (847 x 360x 737)	111 (50)
G80VTL0701716	66,000	80%	300 - 1740	33-1/3 x 17-1/2 x 29 (847 x 445 x 737)	132 (60)
G80VTL0902120	88,000	80%	225 - 1915	33-1/3 x 21 x 29 (847 x 533 x 737)	142 (64)
G80VTL1102122	110,000	80%	700 - 2230	33-1/3 x 21 x 29 (847 x 533 x 737)	154 (70)

DIMENSIONAL DRAWING

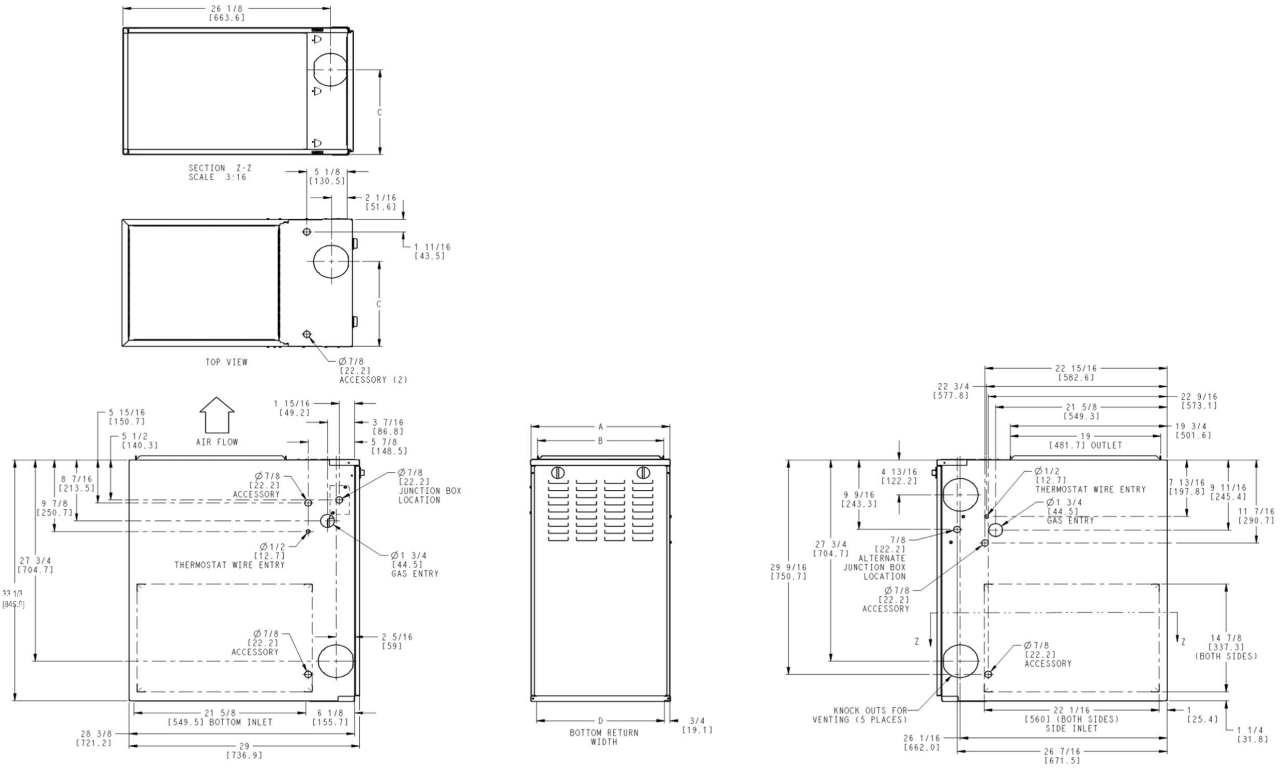

A190084

FURNACE SIZE	A CABINET WIDTH	B OUTLET WIDTH	C TOP AND BOTTOM FLUE COLLAR	D BOTTOM INLET WIDTH	VENT CONNECTION SIZE	SHIP WT. LB (KG)
0451412	14-3/16 (360)	12-9/16 (319)	9-5/16 (237)	12-11/16 (322)	4 (102)	111 (50)
0701716	17-1/2 (445)	15-7/8 (403)	11-9/16 (294)	16 (406)	4 (102)	132 (60)
0902120	21 (533)	19-3/8 (492)	13-5/16 (338)	19-1/2 (495)	4 (102)	142 (64)
1102122	21 (533)	19-3/8 (492)	13-5/16 (338)	19-1/2 (495)	4 (102)	154 (70)

Manufacturer reserves the right to change, at any time, specifications and designs without notice and without obligations.

NOMENCLATURE

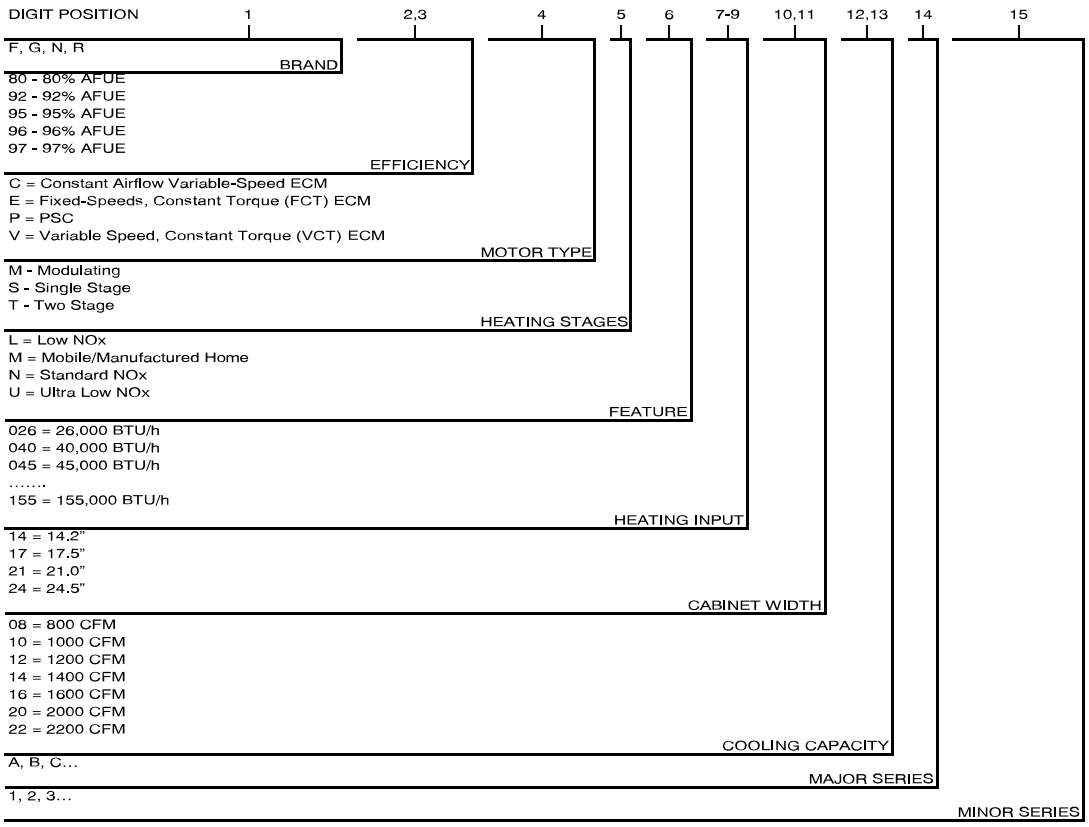

A190043

For California Residents:

For installation in SCAQMD only: This furnace does not meet the SCAQMD Rule 1111 14 ng/J NOx emission limit, and thus is subject to a mitigation fee of up to $450. This furnace is not eligible for the Clean Air Furnace Rebate Program: www.CleanAirFurnaceRebate.com

MINIMUM CLEARANCES TO COMBUSTIBLE MATERIALS FOR ALL UNITS

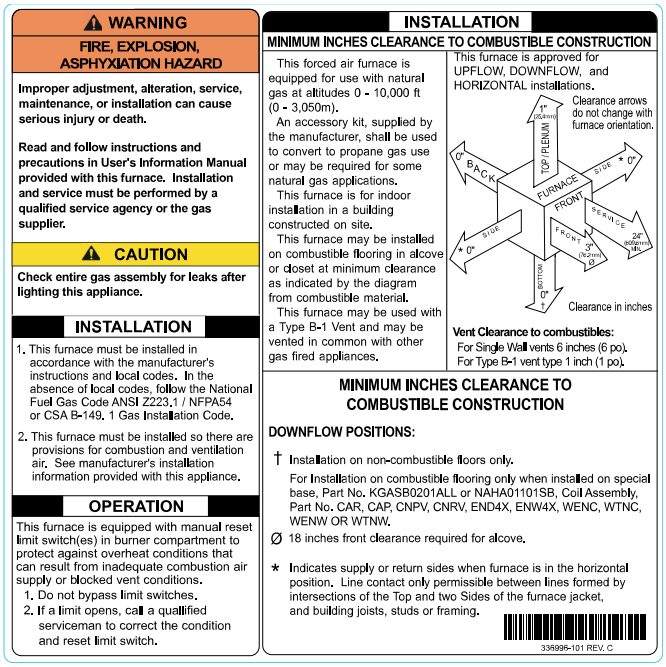

WARNING

FIRE, EXPLOSION, ASPHYXIATION HAZARD

Improper adjustment, alteration, service, maintenance, or installation can cause serious injury or death.

Read and follow instructions and precautions in User's Information Manual provided with this furnace. Installation and service must be performed by a qualified service agency or the gas supplier.

CAUTION

Check entire gas assembly for leaks after lighting this appliance.

INSTALLATION

1. This furnace must be installed in accordance with the manufacturer's instructions and local codes. In the absence of local codes, follow the National Fuel Gas Code ANSI Z223.1 / NFPA54 or CSA B-149. 1 Gas Installation Code.
2. This furnace must be installed so there are provisions for combustion and ventilation air. See manufacturer's installation information provided with this appliance.

OPERATION

This furnace is equipped with manual reset limit switch(es) in burner compartment to protect against overheat conditions that can result from inadequate combustion air supply or blocked vent conditions.

1. Do not bypass limit switches.
2. If a limit opens, call a qualified serviceman to correct the condition and reset limit switch.

INSTALLATION

MINIMUM INCHES CLEARANCE TO COMBUSTIBLE CONSTRUCTION

This forced air furnace is equipped for use with natural gas at altitudes 0 - 10,000 ft (0 - 3,050m).

An accessory kit, supplied by the manufacturer, shall be used to convert to propane gas use or may be required for some natural gas applications.

This furnace is for indoor installation in a building constructed on site.

This furnace may be installed on combustible flooring in alcove or closet at minimum clearance as indicated by the diagram from combustible material.

This furnace may be used with a Type B-1 Vent and may be vented in common with other gas fired appliances.

This furnace is approved for UPFLOW, DOWNFLOW, and HORIZONTAL installations.

Vent Clearance to combustibles:
For Single Wall vents 6 inches (6 po).
For Type B-1 vent type 1 inch (1 po).

MINIMUM INCHES CLEARANCE TO COMBUSTIBLE CONSTRUCTION

DOWNFLOW POSITIONS:

† Installation on non-combustible floors only.
For Installation on combustible flooring only when installed on special base, Part No. KGASB0201ALL or NAHA01101SB, Coil Assembly, Part No. CAR, CAP, CNPV, CNRV, END4X, ENW4X, WENC, WTNC, WENW OR WTNW.

Ø 18 inches front clearance required for alcove.

* Indicates supply or return sides when furnace is in the horizontal position. Line contact only permissible between lines formed by intersections of the Top and two Sides of the furnace jacket, and building joists, studs or framing.

336996-101 REV. C

A10269

SPECIFICATIONS

Unit Size			0451412	0701716	0902120	1102122
RATINGS AND PERFORMANCE						
Input BTUh* Nonweatherized ICS	All Standard	High	44,000	66,000	88,000	110,000
	All Low NOx Upflow	Low	29,000	43,500	58,000	72,500
	All Low Nox Downflow/ Horizontal	High	42,000	63,000	84,000	105,000
		Low	29,000	43,500	58,000	72,500
Output Capacity (BTUh) Nonweatherized ICS†	All Standard	High	35,000	53,000	71,000	89,000
	All Low NOx Upflow	Low	23,000	35,000	47,000	59,000
	All Low Nox Downflow/ Horizontal	High	34,000	51,000	68,000	85,000
		Low	23,000	35,000	47,000	59,000
AFUE‡			80.00			
Certified Temperature Rise Range °F (°C)		High	30-60 (17-33)	25-55 (14-30)	25-55 (14-30)	30-60 (17-33)
		Low	20-50 (11-28)	15-45 (8-25)	15-45 (8-25)	20-50 (11-28)
Certified External Static Pressure	Heat/Cool		0.10/0.50	0.12/0.50	0.15/0.50	0.20/0.50
Airflow CFM **	Heating High/Low		915/780	1400/1225	1800/1570	2055/1685
	Cooling		1175	1740	1915	2230
ELECTRICAL						
Unit Volts-Hertz-Phase			115-60-1			
Operating Voltage Range	Min/Max		104/127			
Maximum Unit Amps			7.70	10.50	11.50	13.10
Maximum Wire Length (Measure one way in Ft. (M))			35 (10.9)	26 (8.1)	24 (7.5)	34 (10.4)
Minimum Wire Size			14	14	14	12
Maximum Fuse or Ckt Bkr Size (Amps)††			15	15	15	20
Transformer (24v)			40va			
External Control	Heating		12va			
Power Available	Cooling		35va			
Air Conditioning Blower Relay			Standard			
CONTROLS						
Burners (Monoport)			2	3	4	5
Gas Connection Size			1/2in. NPT			
GAS CONTROLS						
Gas Valve (Redundant)	Mfr.		WhiteRodgers			
	Min. inlet pressure (In. W.C.)		4.5 (Natural Gas)			
	Max. inlet pressure (In. W.C.)		13.6 (Natural Gas)			
Ignition Device			Hot Surface			
Factory installed orifice			Size 43			
BLOWER DATA						
Variable-Speed Constant Torque (VCT) ECM			1/2	3/4	3/4	1
Motor Full Load Amps			6.4	9.2	9.6	10.9
RPM (Nominal)			1200	1200	1200	1200
Blower Wheel Diameter x Width - In. (mm)			10 x 6 (254x152)	11 x 8 (279x203)	11 x 11 (279x279)	11 x 11 (279x279)

*. Gas input ratings are certified for elevations to 2000 ft. (610 M). For elevations above 2000 ft. (610 M), reduce ratings 4 percent for each 1000 ft. (305 M) above sea level. Refer to National Fuel Gas Code NFPA 54/ANSI Z223.1-2012 Table F.4 or furnace installation instructions.

†. ICS = Isolated Combustion System

‡. Capacity in accordance with U.S. Government DOE test procedures

**. Airflow shown is for bottom only return-air supply for Max Cooling Airflow and heating airflows (efficiency setting) at certified external static pressure. For air delivery above 1800 CFM, see Air Delivery table for other options. A filter is required for each return-air supply. An airflow reduction of up to 7 percent may occur when using the factory-specified 4-5/16 in. (110 mm) wide, high efficiency media filter.

††. Time-delay type is recommended.

AIR DELIVERY—CFM (With Filter)*

Air Delivery - CFM (With Filter)*

COOLING[4] AND HEATING AIR DELIVERY - CFM (Bottom Return[5] With Filter)													
(SW1-5 and SW2-2 set to OFF, except as indicated. See Notes 1 and 2.)													
Unit Size: 0451412	**Clg/CF Switch settings**			**External Static Pressure (ESP)**									
Clg Switches:	**SW2-8**	**SW2-7**	**SW2-6**	**0.1**	**0.2**	**0.3**	**0.4**	**0.5**	**0.6**	**0.7**	**0.8**	**0.9**	**1.0**
Clg Default:	OFF	OFF	OFF	1190	1140	1100	1065	1020	985	905	800	665	525
Cooling (SW2-8,7,6)	OFF	OFF	ON	620	560	520	455	410	355	305	255	See Note 4	
	OFF	ON	OFF	795	755	705	670	615	585	530	490	440	405
	OFF	ON	ON	1020	955	930	890	840	805	755	715	645	490
	ON	OFF	OFF	1190	1140	1100	1065	1020	985	905	800	665	525
	ON	OFF	ON	1455	1390	1325	1255	1175	1085	1000	880	755	575
	ON	ON	OFF	1455	1390	1325	1255	1175	1085	1000	880	755	575
	ON	ON	ON	1455	1390	1325	1255	1175	1085	1000	880	755	575
	Maximum Clg Airflow[2]			1455	1390	1325	1255	1175	1085	1000	880	755	575
CF Switches	**SW2-5**	**SW2-4**	**SW2-3**										
Low-Clg Default:	OFF	OFF	OFF	620	560	520	455	410	355	305	255	See Note 4	
Low-Cooling (SW2-5,4,3)	OFF	OFF	ON	620	560	520	455	410	355	305	255	See Note 4	
	OFF	ON	OFF	795	755	705	670	615	585	530	490	440	405
	OFF	ON	ON	1020	955	930	890	840	805	755	715	645	490
	ON	OFF	OFF	1190	1140	1100	1065	1020	985	905	800	665	525
	ON	OFF	ON	1455	1390	1325	1255	1175	1085	1000	880	755	575
	ON	ON	OFF	1455	1390	1325	1255	1175	1085	1000	880	755	575
	ON	ON	ON	1455	1390	1325	1255	1175	1085	1000	880	755	575
Cont. Fan Default:	OFF	OFF	OFF	620	560	520	455	410	355	305	255	See Note 4	
Continuous Fan (SW2-5,4,3)	OFF	OFF	ON	620	560	520	455	410	355	305	255	See Note 4	
	OFF	ON	OFF	795	755	705	670	615	585	530	490	440	405
	OFF	ON	ON	1020	955	930	890	840	805	755	715	645	490
	ON	OFF	OFF	1020	955	930	890	840	805	755	715	645	490
	ON	OFF	ON	1020	955	930	890	840	805	755	715	645	490
	ON	ON	OFF	1020	955	930	890	840	805	755	715	645	490
	ON	ON	ON	1020	955	930	890	840	805	755	715	645	490
Heating (SW1)	High Heat Airflow[3]			915	860	825	790	735	700	650	610	550	450
	Low Heat Airflow[3]			780	730	685	635	585	545	495	450	400	370
Unit Size: 0701716	**Clg/CF Switch settings**			**External Static Pressure (ESP)**									
Clg Switches:	**SW2-8**	**SW2-7**	**SW2-6**	**0.1**	**0.2**	**0.3**	**0.4**	**0.5**	**0.6**	**0.7**	**0.8**	**0.9**	**1.0**
Clg Default:	OFF	OFF	OFF	1600	1570	1535	1500	1465	1430	1400	1365	1335	1300
Cooling (SW2-8,7,6)	OFF	OFF	ON	590	520	440	365	300	235	See Note 4			
	OFF	ON	OFF	790	730	670	610	550	485	430	380	330	275
	OFF	ON	ON	1025	980	930	880	835	785	735	690	635	590
	ON	OFF	OFF	1230	1190	1150	1105	1065	1025	980	940	900	860
	ON	OFF	ON	1390	1355	1315	1280	1240	1200	1165	1125	1090	1055
	ON	ON	OFF	1600	1570	1535	1500	1465	1430	1400	1365	1335	1300
	ON	ON	ON	1855	1830	1800	1770	1740	1695	1645	1600	1520	1415
	Maximum Clg Airflow[2]			1855	1830	1800	1770	1740	1695	1645	1600	1520	1415
CF Switches	**SW2-5**	**SW2-4**	**SW2-3**										
Low-Clg Default:	OFF	OFF	OFF	590	520	440	365	300	235	See Note 4			
Low-Cooling (SW2-5,4,3)	OFF	OFF	ON	590	520	440	365	300	235	See Note 4			
	OFF	ON	OFF	790	730	670	610	550	485	430	380	330	275
	OFF	ON	ON	1025	980	930	880	835	785	735	690	635	590
	ON	OFF	OFF	1230	1190	1150	1105	1065	1025	980	940	900	860
	ON	OFF	ON	1390	1355	1315	1280	1240	1200	1165	1125	1090	1055
	ON	ON	OFF	1600	1570	1535	1500	1465	1430	1400	1365	1335	1300
	ON	ON	ON	1855	1830	1800	1770	1740	1695	1645	1600	1520	1415
Cont. Fan Default:	OFF	OFF	OFF	590	520	440	365	300	235	See Note 4			
Continuous Fan (SW2-5,4,3)	OFF	OFF	ON	590	520	440	365	300	235	See Note 4			
	OFF	ON	OFF	685	625	565	505	445	385	325	265	See Note 4	
	OFF	ON	ON	790	730	670	610	550	485	430	380	330	275
	ON	OFF	OFF	790	730	670	610	550	485	430	380	330	275
	ON	OFF	ON	790	730	670	610	550	485	430	380	330	275
	ON	ON	OFF	790	730	670	610	550	485	430	380	330	275
	ON	ON	ON	790	730	670	610	550	485	430	380	330	275
Heating (SW1)	High Heat Airflow[3]			1410	1375	1340	1300	1260	1225	1190	1155	1120	1085
	Low Heat Airflow[3]			1235	1195	1155	1110	1070	1025	985	945	905	865

Manufacturer reserves the right to change, at any time, specifications and designs without notice and without obligations.

Air Delivery - CFM (With Filter)* (Continued)

COOLING[4] AND HEATING AIR DELIVERY - CFM (Bottom Return[5] With Filter) (SW1-5 and SW2-2 set to OFF, except as indicated. See Notes 1 and 2.)													
Unit Size: 0902120	**Clg/CF Switch settings**			**External Static Pressure (ESP)**									
Clg Switches:	**SW2-8**	**SW2-7**	**SW2-6**	**0.1**	**0.2**	**0.3**	**0.4**	**0.5**	**0.6**	**0.7**	**0.8**	**0.9**	**1.0**
Clg Default:	OFF	OFF	OFF	1985	1935	1885	1835	1785	1735	1685	1630	1583	1532
Cooling (SW2-8,7,6)	OFF	OFF	ON	860	755	650	545	445	350	235	See Note 4		
	OFF	ON	OFF	1085	1000	910	830	735	655	565	485	405	310
	OFF	ON	ON	1255	1180	1105	1025	950	870	790	715	640	570
	ON	OFF	OFF	1425	1355	1290	1220	1150	1085	1015	940	870	800
	ON	OFF	ON	1630	1575	1515	1455	1395	1330	1270	1210	1155	1090
	ON	ON	OFF	1985	1935	1885	1835	1785	1735	1685	1630	1583	1532
	ON	ON	ON	2100	2055	2010	1960	1915	1870	1820	1775	1715	1640
	Maximum Clg Airflow[2]			2100	2055	2010	1960	1915	1870	1820	1775	1715	1640
CF Switches	**SW2-5**	**SW2-4**	**SW2-3**										
Low-Clg Default:	OFF	OFF	OFF	860	755	650	545	445	350	235	See Note 4		
Low-Cooling (SW2-5,4,3)	OFF	OFF	ON	700	575	455	345	225	See Note 4				
	OFF	ON	OFF	860	755	650	545	445	350	235	See Note 4		
	OFF	ON	ON	1085	1000	910	830	735	655	565	485	405	310
	ON	OFF	OFF	1255	1180	1105	1025	950	870	790	715	640	570
	ON	OFF	ON	1425	1355	1290	1220	1150	1085	1015	940	870	800
	ON	ON	OFF	1630	1575	1515	1455	1395	1330	1270	1210	1155	1090
	ON	ON	ON	1985	1935	1885	1835	1785	1735	1685	1630	1583	1532
Cont. Fan Default:	OFF	OFF	OFF	860	755	650	545	445	350	235	See Note 4		
Continuous Fan (SW2-5,4,3)	OFF	OFF	ON	700	575	455	345	225	See Note 4				
	OFF	ON	OFF	860	755	650	545	445	350	235	See Note 4		
	OFF	ON	ON	1085	1000	910	830	735	655	565	485	405	310
	ON	OFF	OFF	1255	1180	1105	1025	950	870	790	715	640	570
	ON	OFF	ON	1255	1180	1105	1025	950	870	790	715	640	570
	ON	ON	OFF	1255	1180	1105	1025	950	870	790	715	640	570
	ON	ON	ON	1255	1180	1105	1025	950	870	790	715	640	570
Heating (SW1)	High Heat Airflow[3]			1830	1775	1725	1675	1625	1570	1520	1465	1410	1360
	Low Heat Airflow[3]			1600	1540	1485	1430	1370	1315	1255	1195	1140	1070
Unit Size: 1102122	**Clg/CF Switch settings**			**External Static Pressure (ESP)**									
Clg Switches:	**SW2-8**	**SW2-7**	**SW2-6**	**0.1**	**0.2**	**0.3**	**0.4**	**0.5**	**0.6**	**0.7**	**0.8**	**0.9**	**1.0**
Clg Default:	OFF	OFF	OFF	2055	2000	1950	1900	1840	1790	1740	1675	1625	1565
Cooling (SW2-8,7,6)	OFF	OFF	ON	855	755	See Note 4							
	OFF	ON	OFF	1060	985	875	800	700	See Note 4				
	OFF	ON	ON	1250	1180	1095	1025	925	860	775	715	See Note 4	
	ON	OFF	OFF	1445	1380	1320	1235	1175	1100	1035	955	900	825
	ON	OFF	ON	1685	1630	1560	1505	1445	1375	1320	1265	1195	1140
	ON	ON	OFF	2055	2000	1950	1900	1840	1790	1740	1675	1625	1565
	ON	ON	ON	2465	2415	2365	2305	2230	2140	2045	1925	1805	1655
	Maximum Clg Airflow[2]			2465	2415	2365	2305	2230	2140	2045	1925	1805	1655
CF Switches	**SW2-5**	**SW2-4**	**SW2-3**										
Low-Clg Default:	OFF	OFF	OFF	855	755	See Note 4							
Low-Cooling (SW2-5,4,3)	OFF	OFF	ON	640	540	See Note 4							
	OFF	ON	OFF	855	755	See Note 4							
	OFF	ON	ON	1060	985	875	800	700	See Note 4				
	ON	OFF	OFF	1250	1180	1095	1025	925	860	775	715	See Note 4	
	ON	OFF	ON	1445	1380	1320	1235	1175	1100	1035	955	900	825
	ON	ON	OFF	1685	1630	1560	1505	1445	1375	1320	1265	1195	1140
	ON	ON	ON	2055	2000	1950	1900	1840	1790	1740	1675	1625	1565
Cont. Fan Default:	OFF	OFF	OFF	855	755	See Note 4							
Continuous Fan (SW2-5,4,3)	OFF	OFF	ON	640	540	See Note 4							
	OFF	ON	OFF	855	755	See Note 4							
	OFF	ON	ON	1060	985	875	800	700	See Note 4				
	ON	OFF	OFF	1250	1180	1095	1025	925	860	775	715	See Note 4	
	ON	OFF	ON	1445	1380	1320	1235	1175	1100	1035	955	900	825
	ON	ON	OFF	1445	1380	1320	1235	1175	1100	1035	955	900	825
	ON	ON	ON	1445	1380	1320	1235	1175	1100	1035	955	900	825
Heating (SW1)	High Heat Airflow[3]			2105	2055	2005	1955	1895	1850	1795	1735	1665	1580
	Low Heat Airflow[3]			1740	1685	1620	1560	1505	1440	1385	1325	1260	1205

Notes following table.

1. Nominal 350 CFM/ton cooling airflow is delivered with SW1-5 and SW2-2 set to OFF.
   Set both SW1-5 and SW2-2 to ON for +7% airflow (nominal 370 CFM/ton).
   Set SW1-5 to ON and SW2-2 to OFF for +15% airflow (nominal 400 CFM/ton).
   Set SW2-2 to ON and SW1-5 to OFF for -7% airflow (nominal 325 CFM/ton).
   The above adjustments in airflow are subject to motor horsepower range/capacity.
   This applies to Cooling and Low-Cooling airflow, but does not affect continuous fan airflow.
2. Maximum cooling airflow is achieved when switches SW2-6, SW2-7, SW2-8 and SW1-5 are set to ON, and SW2-2 is set to OFF.
3. All heating CFM's are when comfort/efficiency adjustment switch (SW1-4) is set to OFF
4. Ductwork must be sized for high-heating CFM within the operational range of ESP. Operation within the blank areas of the chart is not recommended because high-heat operation will be above 1.0 ESP.
5. All airflows on 21" casing size furnaces are 5% less on side return only installations.
6. Side returns for 24.5" casing sizes require two sides, or side and bottom, to allow sufficient airflow at the return of the furnace.
7. Airflows over 1800 CFM require bottom return, two-side return, or bottom and side return or excessive watt draw may result. A minimum filter size of 20 x 25"(508 x 635 mm) is required.

VENTING

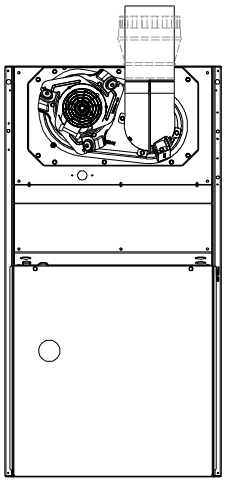

SEE NOTES: 1,2,4,7,8,9
on the page following

A03208

Fig. 1 – Upflow Application - Vent Elbow Up

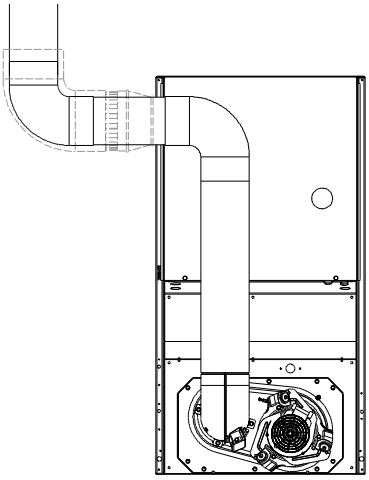

SEE NOTES:1,2,3,4,5,7,8,9
on the page following
these figures

A03210

Fig. 3 – Downflow Application - Vent Elbow Up then Left

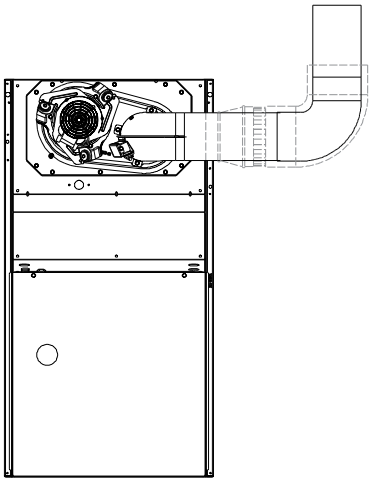

SEE NOTES: 1,2,3,4,7,8,9
on the pages following
these figures

A03209

Fig. 2 – Upflow Application - Vent Elbow Right

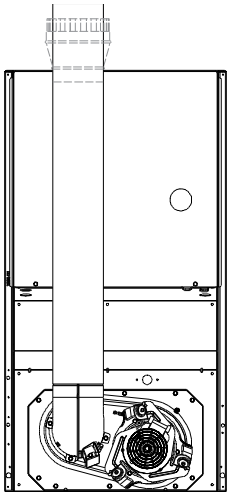

SEE NOTES: 1,2,4,5,7,8,9
on the page following
these figures

A03211

Fig. 4 – Downflow Application - Vent Elbow Up

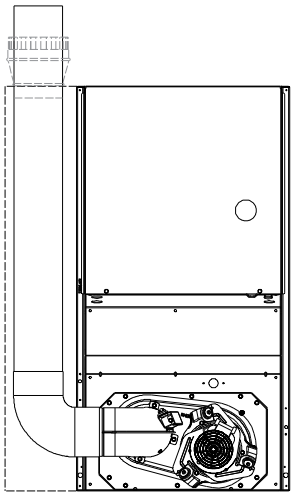

SEE NOTES: 1,2,4,5,6,7,8,9
on the page following these figures

Fig. 5 – Downflow Application - Vent Elbow Left then Up A03207

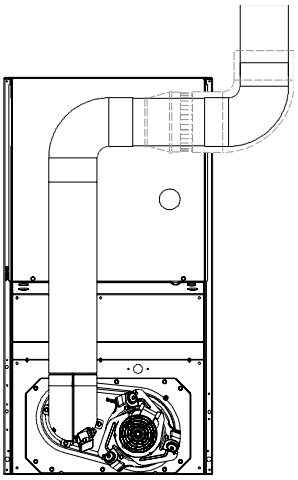

SEE NOTES:1,2,3,4,5,7,8,9
on the page following
these figures.

Fig. 6 – Downflow Application - Vent Elbow Up then Right A03212

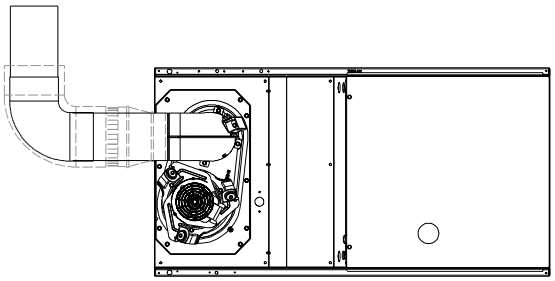

SEE NOTES: 1,2,4,7,8,9 on the page
following these figures

Fig. 7 – Horizontal Left Application - Vent Elbow Left A03213

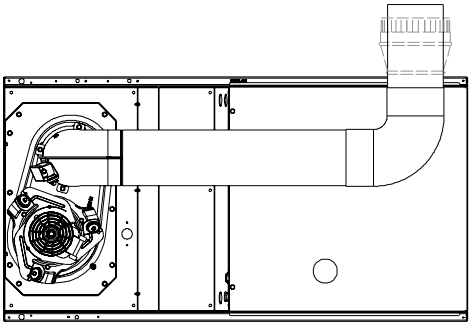

SEE NOTES: 1,2,4,5,7,8,9 on the page
following these figures

Fig. 8 – Horizontal Left Application - Vent Elbow Right then Up A03214

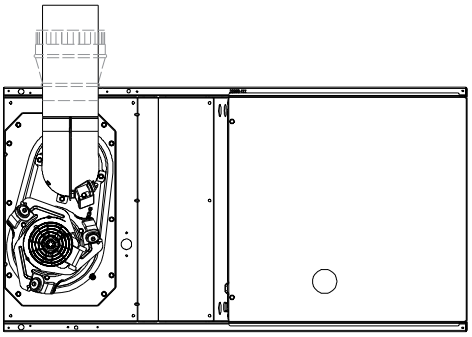

SEE NOTES: 1,2,4,5,7,8,9 on the page
following these figures

Fig. 9 – Horizontal Left Application - Vent Elbow Up A03215

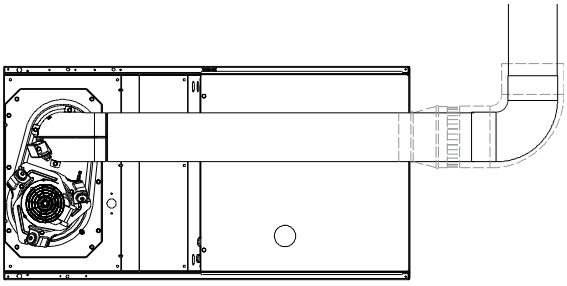

SEE NOTES: 1,2,4,5,7,8,9 on the page
following these figures

Fig. 10 – Horizontal Left Application - Vent Elbow Right A03216

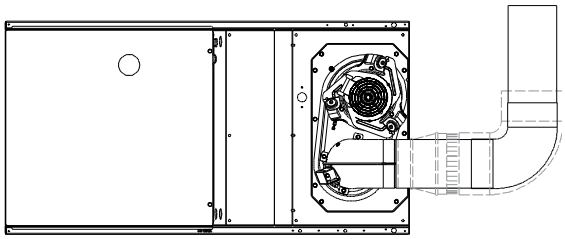

SEE NOTES: 1,2,4,7,8,9 on the page
following these figures

Fig. 11 – Horizontal Right Application - Vent Elbow Right A03218

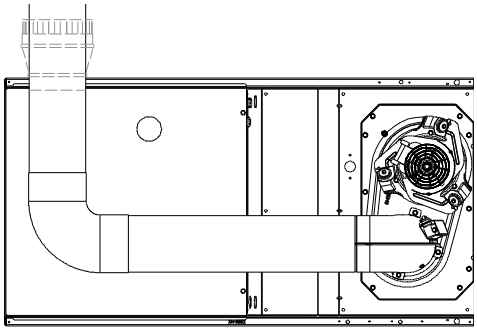

SEE NOTES: 1,2,4,5,7,8,9 on the page following these figures

Fig. 12 – Horizontal Right Application - Vent Elbow Left then Up A03219

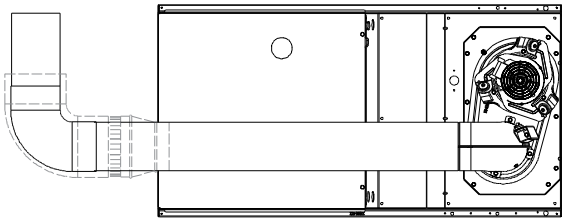

SEE NOTES: 1,2,4,5,7,8,9

Fig. 13 – Horizontal Right Application-Vent Elbow Left A02068

Venting Notes

1. For common vent, vent connector sizing and vent material: United States, latest edition of the National Fuel Gas Code (NFGC), ANSI Z223.1/NFPA 54.
2. Immediately increase to 5-in. (127 mm) vent connector outside furnace casing when 5-in. (127 mm) vent connector required, refer to Note 1.
3. Side outlet vent for upflow and downflow installations must use Type B vent immediately after exiting the furnace, except when Downflow Vent Guard is used in downflow position.
4. Type B vent where required, refer to Note 1.
5. 4-in. (102 mm) single wall vent must be used inside furnace casing and the Downflow Vent Guard Kit.
6. Accessory Downflow Vent Guard Kit, required in downflow installations with bottom vent configuration.
7. Chimney Adapter Kit required for exterior masonry chimney applications. Refer to Chimney Adapter Kits for sizing and complete application details.
8. Secure vent connector to furnace elbow with (2) corrosion-resistant sheet metal screws, space approximately 180° apart.
9. Secure all other single wall vent connector joints with (3) corrosion-resistant screws spaced approximately 120° apart. Secure Type B vent connectors per vent connector manufacturer's recommendations.

ACCESSORIES

PART NUMBER	DESCRIPTION	0451412	0701716	0902120	1102122
FHG1425-2*	Bottom Filter Rack, 14 inch	X	-	-	-
FHG1625-2*	Bottom Filter Rack, 17 inch	-	X	-	-
FHG2025-2*	Bottom Filter Rack, 21 inch	-	-	X	X
325531-402*	Washable filter, 3/4 inch 16 X 25	X	X	-	-
325531-403*	Washable filter, 3/4 inch 20 X 25	-	-	X	X
NAHB00101CA	Coil Adapter Kit	X	X	X	X
NAHB00201CA		X	X	X	X
NAHB00301CA		X	X	X	X
NAHA01101SB	Combustible Floor Base (Not required when evaporator coil case is used for downflow)	X	X	X	X
NAHB00301VC	Downflow Vent Guard (Not required when vent is routed through cabinet)	X	X	X	X
NAHA00401DH	Chimney Adapter Kit 4-in. vent	X	X	X	X
AGAGC8NPS01A†	Natural-to-Propane Conversion Kit *	X	X	X	X
AGAGC8PNS01A†	Propane-to-Natural Conversion Kit *	X	X	X	X
AGATWNPME01B	Twinning Kit VCT-ECM Motor	-	X	X	X
NAHA00201HL	High Altitude Kit	X	X	X	X

*. Purchased through FAST Parts
†. Factory authorized and field installed. Gas conversion kits are CSA recognized.
X Accessory available

© 2021 Carrier. All rights reserved.

Manufacturer reserves the right to change, at any time, specifications and designs without notice and without obligations.