# G96CTN
# Up to 96.7% AFUE, Communicating Two-Stage Gas Furnace

ICP COMMERCIAL

## Product Specifications

SYST0101CW
Recommended
(sold separately)

A200356

**⚠ WARNING**

**CARBON MONOXIDE POISONING AND FIRE HAZARD**

Failure to follow this warning could result in personal injury, death, and/or property damage.

This furnace is not designed for use in recreation vehicles, manufactured (mobile) homes or outdoors.

Failure to follow this warning could result in personal injury, death, and/or property damage.

Use of the AHRI Certified TM Mark indicates a manufacturer's participation in the program. For verification of certification for individual products, go to www.ahridirectory.org .

ISO 9001 Quality

A200326

## EASIER TO SELL

- Up to 96.7% AFUE in upflow and horizontal positions 95% AFUE in downflow position
- Two-stage heating operation
- ION™ Communicating Control System
- Variable-speed, constant airflow ECM blower motor for extra SEER boost with select cooling equipment
- Supports single-stage, two-stage, and variable speed cooling units
- Dehumidification feature in cooling
- All sizes can be installed in air quality management districts with a 40 ng/J NOx emissions requirement
- Cabinet air leakage less than 2.0% at 1.0 in. W.C. and cabinet air leakage less than 1.4% at 0.5 in. W.C. when tested in accordance with ASHRAE standard 193

## TOUGHER

- Flame roll-out sensors standard
- Adjustable heating blower OFF delay
- Factory set blower ON delay
- RPJ® primary heat exchanger
- Stainless steel secondary heat exchanger
- High temperature limit control designed to prevent overheating
- Direct ignition with Silicon Nitride ignitor

## QUIETER

- Operates quieter at lower heating rates
- Two-speed induced draft combustion blower
- Variable speed, constant airflow ECM blower motor
- Fully insulated steel cabinet

## EASIER TO INSTALL AND SERVICE

- Direct vent (2-pipe), single-pipe venting or ventilated combustion air
- 24 VAC humidifier terminal
- Electronic air cleaner terminal
- 35” (889mm) high, for ease of installation
- Quarter turn knobs for easy door removal and secure attachment
- Convertible to propane with gas conversion accessory kit
- Four position - upflow/downflow/horizontal (left/right) installation
- At least twelve different venting configurations
- Through the casing flue pipe for counterflow or horizontal applications with accessory (order separately)
- Self-configuring and communicating control
- Concentric vent available
- Slide out heat exchanger assembly and blower assembly

## LIMITED WARRANTY *

- 10 year No Hassle Replacement™ limited warranty
- Lifetime heat exchanger limited warranty with timely registration
- 5 year parts limited warranty

-With timely registration, an additional 5 year parts limited warranty

*For residential applications only. See warranty certificate for complete details and restrictions, including warranty coverage for other applications.

| Model Number | Input (BTUH) | Efficiency AFUE | | ENERGY STAR® | Cooling Capacity CFM range @ .5 in. w.c. (125 Pa) | Dimensions H x W x D Inches (Millimeters) | Shipping Wt. Lbs (Kg) |
|---|---|---|---|---|---|---|---|
| | | Upflow/Hz | Downflow | | | | |
| G96CTN0601714 | 60,000 | 96.3% | 95% | X | 530 - 1280 | 35 x 17-1/2 x 29-1/2 (889 x 445 x 750) | 151.0 (68.5) |
| G96CTN0801714 | 80,000 | 96.2% | 95% | X | 520 - 1310 | 35 x 17-1/2 x 29-1/2 (889 x 445 x 750) | 152.5 (69.2) |
| G96CTN0802120 | 80,000 | 96.7% | 95% | X | 750 - 1945 | 35 x 21 x 29-1/2 (889 x 533 x 750) | 171.5 (77.8) |
| G96CTN1002122 | 100,000 | 96.1% | 95% | X | 715 - 2160 | 35 x 21 x 29-1/2 (889 x 533 x 750) | 179.0 (81.2) |
| G96CTN1202422 | 120,000 | 96.5% | 95% | X | 705 - 2135 | 35 x 24-1/2 x 29-1/2 (889 x 622 x 750) | 195.0 (88.4) |

# DIMENSIONAL DRAWING

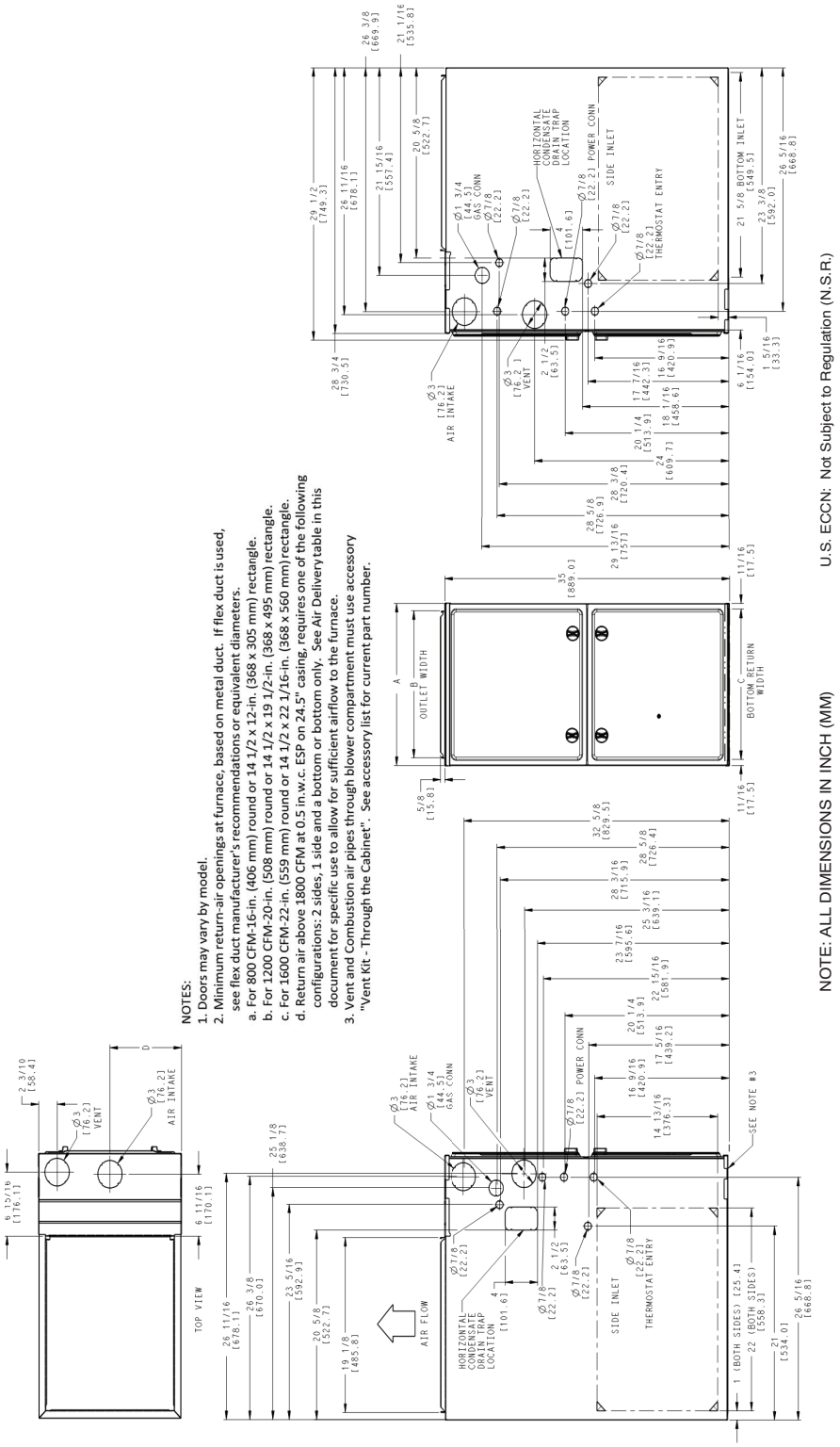


A200327

| FURNACE SIZE | A | B | C | D | SHIP WT. |
|---|---|---|---|---|---|
| | CABINET WIDTH | OUTLET WIDTH | BOTTOM INLET WIDTH | AIR INTAKE | LB (KG) |
| G96CTN0601714 | 17-1/2 (445) | 15-7/8 (403) | 16 (406) | 8-3/4 (222) | 151.0 (68.5) |
| G96CTN0801714 | 17-1/2 (445) | 15-7/8 (403) | 16 (406) | 8-3/4 (222) | 152.5 (69.2) |
| G96CTN0802120 | 21 (533) | 19-3/8 (492) | 19-1/2 (495) | 10-1/2 (267) | 171.5 (77.8) |
| G96CTN1002122 | 21 (533) | 19-3/8 (492) | 19-1/2 (495) | 10-1/2 (267) | 179 (81.2) |
| G96CTN1202422 | 24-1/2 (622) | 22-7/8 (581) | 23 (584) | 12-1/4 (311) | 195 (88.4) |

**Manufacturer reserves the right to change, at any time, specifications and designs without notice and without obligations.**

# MODEL NUMBER IDENTIFICATION GUIDE

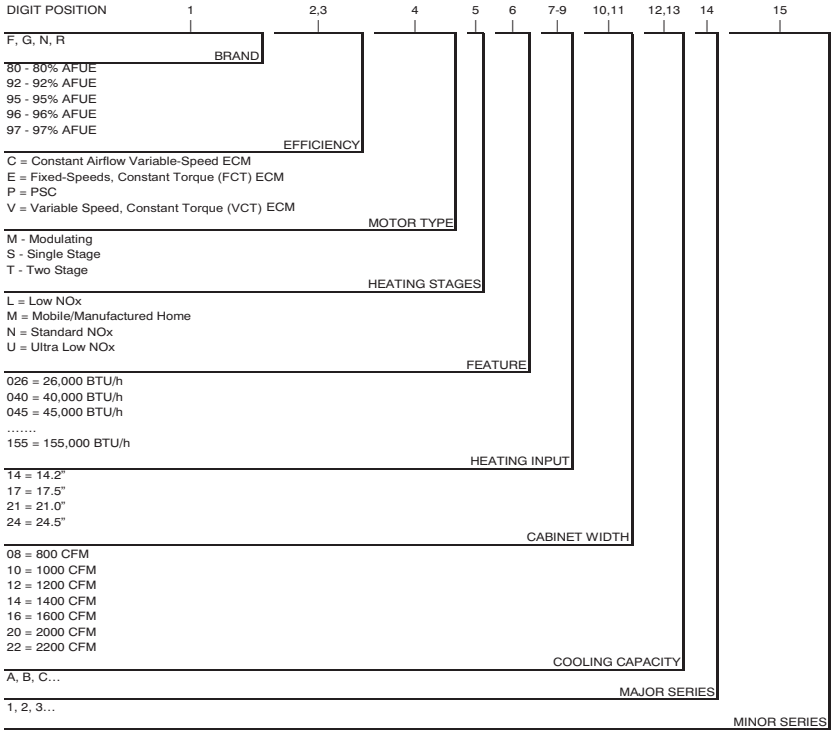


A190043

For California Residents:
For installation in SCAQMD only: This furnace does not meet the SCAQMD Rule 1111 14 ng/J NOx emission limit, and thus is subject to a mitigation fee of up to $450. This furnace is not eligible for the Clean Air Furnace Rebate Program: www.CleanAirFurnaceRebate.com

# FURNACE COMPONENTS

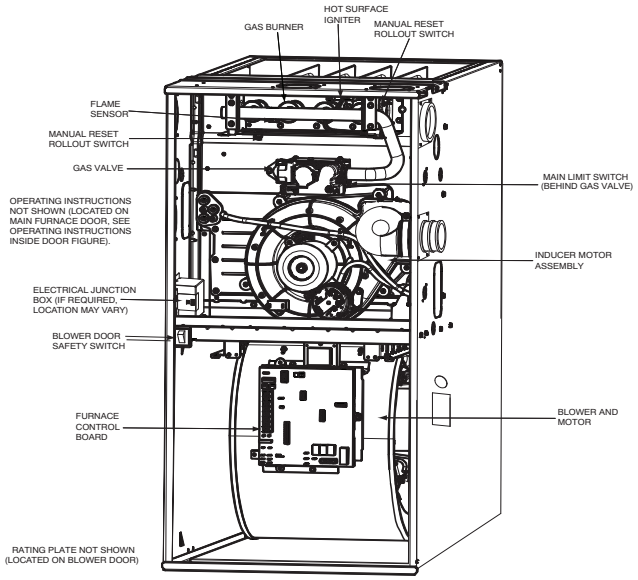


A190145

# MINIMUM CLEARANCES TO COMBUSTIBLE MATERIALS FOR ALL UNITS

| POSITION | CLEARANCE in.(mm) |
|---|---|
| REAR | 0 |
| FRONT (Combustion air openings in furnace and in structure) | 1 (25) |
| Required for service | *24 (610) |
| All Sides of Supply Plenum | *1 (25) |
| Sides | 0 |
| Vent | 0 |
| Top of Furnace | 1 (25) |

*. Consult your local building codes.

# PHYSICAL DATA

| FURNACE SIZE | | | 0601714 | 0801714 | 0802120 | 1002122 | 1202422 |
|---|---|---|---|---|---|---|---|
| **HEATING CAPACITY AND EFFICIENCY** | | | | | | | |
| Input | High Heat | (BTUH) | 60,000 | 80,000 | 80,000 | 100,000 | 120,000 |
| | Low Heat | (BTUH) | 39,000 | 52,000 | 52,000 | 65,000 | 78,000 |
| Output | High Heat | (BTUH) | 58,000 | 78,000 | 78,000 | 98,000 | 117,000 |
| | Low Heat | (BTUH) | 38,000 | 50,000 | 51,000 | 63,000 | 76,000 |
| Certified Temperature Rise Range °F (ºC) | | | 35 - 65 (19 - 36) | 40 - 70 (22 - 39) | 40 - 70 (22 - 39) | 45 - 75 (25 - 42) | 45 - 75 (25 - 42) |
| | | | 30 - 60 (17 - 33) | 30 - 60 (17 - 33) | 30 - 60 (17 - 33) | 30 - 60 (17 - 33) | 30 - 60 (17 - 33) |
| | | | | | | | |
| **AIRFLOW CAPACITY AND BLOWER DATA** | | | | | | | |
| Rated External Static Pressure (in. w.c.) | | Heating | 0.12 | 0.15 | 0.15 | 0.20 | 0.20 |
| | | Cooling | 0.50 | 0.50 | 0.50 | 0.50 | 0.50 |
| Airflow Delivery @ Rated ESP (CFM) | | High Heat | 1055 | 1240 | 1345 | 1575 | 1820 |
| | | Low Heat | 755 | 1008 | 1095 | 1385 | 1555 |
| | | Cooling | 1280 | 1310 | 1945 | 2160 | 2135 |
| Cooling Capacity (tons) | | 400 CFM/ton | 3 | 3.50 | 4.50 | 5 | 5.50 |
| | | 350 CFM/ton | 3.50 | 4 | 5.50 | 6 | 6 |
| Direct-Drive Motor Type | | | Electronically Commutated Motor (ECM) | | | | |
| Direct-Drive Motor HP | | | 1/2 | 1/2 | 1 | 1 | 1 |
| Motor Full Load Amps | | | 8.50 | 8.50 | 12.80 | 12.80 | 12.80 |
| RPM Range | | | 300 - 1300 | | | | |
| Speed Selections | | | Variable (Communicating) | | | | |
| Blower Wheel Dia x Width | | in. | 11 x 8 | 11 x 8 | 11x10 | 11 x 10 | 11 x 11 |
| Air Filtration System | | | Field Supplied Filter | | | | |
| Filter Used for Certified Watt Data* | | | 325531-40* | | | | |
| | | | | | | | |
| **ELECTRICAL DATA** | | | | | | | |
| Input Voltage | | Volts-Hertz-Phase | 115-60-1 | | | | |
| Operating Voltage Range | | Min-Max | 104-127 | | | | |
| Maximum Input Amps | | Amps | 9.30 | 9.30 | 13.60 | 13.70 | 13.70 |
| Unit Ampacity | | Amps | 12.60 | 12.60 | 17.90 | 18.00 | 18.00 |
| Minimum Wire Size | | AWG | 14 | 14 | 12 | 12 | 12 |
| Maximum Wire Length @ Minimum Wire Size | | Feet | 29 | 29 | 32 | 31 | 31 |
| | | (M) | (9.0) | (9.0) | (9.8) | (9.7) | (9.7) |
| Maximum Fuse/Ckt Bkr (Time-Delay Type Recommended) | | Amps | 15 | 15 | 20 | 20 | 20 |
| Transformer Capacity (24vac output) | | | 40 VA | | | | |
| External Control Power Available | | Heating | 24.3 VA | | | | |
| | | Cooling | 34.6 VA | | | | |
| | | | | | | | |
| **CONTROLS** | | | | | | | |
| Gas Connection Size | | | 1/2" - NPT | | | | |
| Burners (Monoport) | | | 3 | 4 | 4 | 5 | 6 |
| Gas Valve (Redundant) | | Manufacturer | White Rogers | | | | |
| Minimum Inlet Gas pressure (in. wc) | | | 4.50 | | | | |
| Maximum Inlet Gas pressure (in. wc) | | | 13.60 | | | | |
| Manufactured (Mobile) Home Kit | | | Not approved for Modular (Mobile Home) use | | | | |
| Ignition Device | | | Silicon Nitride | | | | |
| Heating Blower Control (Heating Off-Delay) | | | Adjustable: 90, 120, 150, 180 seconds | | | | |
| Cooling Blower Control (Time Delay Relay) | | | 90 seconds | | | | |
| Communication System | | | ION™ Communicating SYST0101CW | | | | |
| Thermostat Connections | | | R, W/W1, W2 Y/Y2, Y1, G, Com 24V, DHUM | | | | |
| Accessory Connections | | | EAC (115vac); HUM (24vac); 1-stg AC (via Y/Y2) | | | | |

*. See Accessory List for part numbers available.

# DIP SWITCH DESCRIPTION

**DIP SWITCH CONFIGURATION**

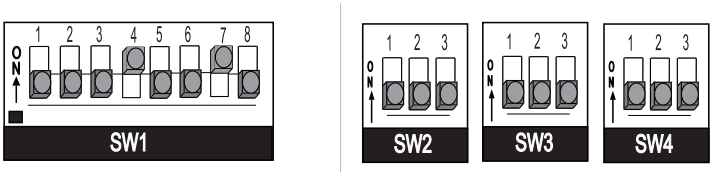


**SW1**

| Switch | Description | | Factory |
|---|---|---|---|
| 1 | **Status Code Recovery -** Turn ON to retrieve status codes. | See manual for use. | OFF |
| 2 | **Low Heat Only -** SW1 - 2 OFF allows two-stage operation SW1 - 2 ON for two-stage operation using two-stage TSTAT. | using single stage TSTAT (Adaptive Heat Mode). | OFF |
| 3 | **Not Used** | | OFF |
| 4 | **Comfort/Efficiency Adjust -** Turn ON to decrease low- & high-heat airflow 15% for 90%+ models or 10% for 80% | heat airflow 20% for 90%+ models or 16% for 80% models models | ON |
| 5 | **CFM per Ton Adjust -** See Airflow Tables in manual for | desired settings. Also see SW4 - 3. | OFF |
| 6 | **Component Self Test -** Turn ON to initiate Component disconnected. Turn OFF when Self Test is completed. | Self Test for troubleshooting assistance when R TSTAT lead is | OFF |
| 7 & 8 | **Blower Off Delay -** See manual or unit wiring diagram for Factory default is 120 Seconds. | settings. Adjustable 90 - 180 seconds. | 7 - ON<br>8 - OFF |

**SW2**

| Switch | Description | | Factory |
|---|---|---|---|
| 1 - 3 | **A/C Setup Switches -** The Air Conditioning setup switch (two-stage units) airflow. See Cooling Air Delivery Tables in | selects desired cooling or high-stage cooling manual for specific switch settings. | ALL OFF |

**SW3**

| Switch | Description | | Factory |
|---|---|---|---|
| 1 - 3 | **CF Setup Switches -** The Continuous Fan setup switch airflow. See Cooling Air Delivery Tables and Continuous Fan | selects desired CF and low-stage cooling (two-stage A/C units) Air Delivery Tables (when present) for specific switch settings. | ALL OFF |

**SW4**

| Switch | Description | | Factory |
|---|---|---|---|
| 1 | **Future Use -** Switch should remain in OFF position. | | OFF |
| 2 | **Not Used** | | OFF |
| 3 | **CFM per Ton Adjust -** See Airflow Tables for desired | settings. Also SW1 - 5. | OFF |

A190155

# AIR DELIVERY - CFM

**AIR DELIVERY - CFM (with filter)**

**Cooling[4] and Heating Air Delivery - CFM continued (Bottom Return[5] with Filter)**

**(SW1-5 and SW4-3 set to OFF, except as indicated. See notes 1 and 2.)**

| Unit Size: 0601714 | Clg/CF Switch settings | | | External Static Pressure (ESP) | | | | | | | | | |
|---|---|---|---|---|---|---|---|---|---|---|---|---|---|
| **Clg Switches** | **SW2-3** | **SW2-2** | **SW2-1** | **0.1** | **0.2** | **0.3** | **0.4** | **0.5** | **0.6** | **0.7** | **0.8** | **0.9** | **1.0** |
| Clg Default: | OFF | OFF | OFF | 1115 | 1120 | 1125 | 1120 | 1120 | 1115 | 1110 | 1100 | 1095 | 1085 |
| **CF Switches** | **SW3-3** | **SW3-2** | **SW3-1** | | | | | | | | | | |
| Low-Clg Default: | OFF | OFF | OFF | 565 | 565 | 555 | 540 | 530 | See note 4 | | | | |
| | | | | | | | | | | | | | |
| Cooling Airflow (SW2) Low-Cooling Airflow (SW3) | OFF | OFF | ON | 565 | 565 | 555 | 540 | 530 | See note 4 | | | | |
| | OFF | ON | OFF | 695 | 710 | 715 | 710 | 705 | 700 | 695 | 685 | 680 | 675 |
| | OFF | ON | ON | 940 | 945 | 940 | 935 | 935 | 930 | 920 | 900 | 890 | 875 |
| | ON | OFF | OFF | 1115 | 1120 | 1125 | 1120 | 1120 | 1115 | 1110 | 1100 | 1095 | 1085 |
| | ON | OFF | ON | 1285 | 1290 | 1295 | 1295 | 1285 | 1250 | 1220 | 1185 | 1155 | 1120 |
| | ON | ON | OFF | 1400 | 1370 | 1340 | 1310 | 1280 | 1245 | 1215 | 1185 | 1150 | 1115 |
| | ON | ON | ON | 1400 | 1370 | 1340 | 1310 | 1280 | 1245 | 1215 | 1185 | 1150 | 1115 |
| | Maximum Clg Airflow[2] | | | 1400 | 1370 | 1340 | 1310 | 1280 | 1245 | 1215 | 1185 | 1150 | 1115 |
| **CF Switches** | **SW3-3** | **SW3-2** | **SW3-1** | | | | | | | | | | |
| Cont. Fan Default: | OFF | OFF | OFF | 565 | 565 | 555 | 540 | 530 | See note 4 | | | | |
| | | | | | | | | | | | | | |
| Continuous Fan Airflow (SW3) | OFF | OFF | ON | 565 | 565 | 555 | 540 | 530 | See note 4 | | | | |
| | OFF | ON | OFF | 695 | 710 | 715 | 710 | 705 | 700 | 695 | 685 | 680 | 675 |
| | OFF | ON | ON | 940 | 945 | 940 | 935 | 935 | 930 | 920 | 900 | 890 | 875 |
| | ON | OFF | OFF | 1115 | 1120 | 1125 | 1120 | 1120 | 1115 | 1110 | 1100 | 1095 | 1085 |
| | ON | OFF | ON | 1115 | 1120 | 1125 | 1120 | 1120 | 1115 | 1110 | 1100 | 1095 | 1085 |
| | ON | ON | OFF | 1115 | 1120 | 1125 | 1120 | 1120 | 1115 | 1110 | 1100 | 1095 | 1085 |
| | ON | ON | ON | 1115 | 1120 | 1125 | 1120 | 1120 | 1115 | 1110 | 1100 | 1095 | 1085 |
| | | | | | | | | | | | | | |
| Heating (SW1) | High Heat Airflow[3] | | | 1055 | 1060 | 1065 | 1065 | 1055 | 1050 | 1040 | 1035 | 1025 | 1010 |
| | Low Heat Airflow[3] | | | 750 | 770 | 775 | 775 | 770 | 765 | 755 | 745 | 740 | 735 |
| | | | | | | | | | | | | | |

# AIR DELIVERY - CFM (continued)

| AIR DELIVERY - CFM (with filter) | | | | | | | | | | | | | |
|---|---|---|---|---|---|---|---|---|---|---|---|---|---|
| Cooling[4] and Heating Air Delivery - CFM continued (Bottom Return[5] with Filter) | | | | | | | | | | | | | |
| (SW1-5 and SW4-3 set to OFF, except as indicated. See notes 1 and 2.) | | | | | | | | | | | | | |
| **Unit Size: 0801714** | **Clg/CF Switch settings** | | | **External Static Pressure (ESP)** | | | | | | | | | |
| **Clg Switches** | **SW2-3** | **SW2-2** | **SW2-1** | **0.1** | **0.2** | **0.3** | **0.4** | **0.5** | **0.6** | **0.7** | **0.8** | **0.9** | **1.0** |
| Clg Default: | OFF | OFF | OFF | 1085 | 1095 | 1095 | 1100 | 1100 | 1095 | 1090 | 1095 | 1085 | 1080 |
| **CF Switches** | **SW3-3** | **SW3-2** | **SW3-1** | | | | | | | | | | |
| Low-Clg Default: | OFF | OFF | OFF | 550 | 550 | 545 | 535 | 520 | See note 4 | | | | |
| | | | | | | | | | | | | | |
| Cooling Airflow (SW2) Low-Cooling Airflow (SW3) | OFF | OFF | ON | 550 | 550 | 545 | 535 | 520 | See note 4 | | | | |
| | OFF | ON | OFF | 705 | 710 | 710 | 710 | 700 | See note 4 | | | | |
| | OFF | ON | ON | 885 | 900 | 910 | 910 | 910 | 905 | 900 | 895 | 885 | 875 |
| | ON | OFF | OFF | 1085 | 1095 | 1095 | 1100 | 1100 | 1095 | 1090 | 1095 | 1085 | 1080 |
| | ON | OFF | ON | 1255 | 1265 | 1265 | 1270 | 1275 | 1275 | 1255 | 1220 | 1190 | 1160 |
| | ON | ON | OFF | 1420 | 1410 | 1375 | 1345 | 1310 | 1280 | 1255 | 1220 | 1190 | 1160 |
| | ON | ON | ON | 1420 | 1410 | 1375 | 1345 | 1310 | 1280 | 1255 | 1220 | 1190 | 1160 |
| | Maximum Clg Airflow[2] | | | 1445 | 1410 | 1375 | 1345 | 1310 | 1275 | 1255 | 1220 | 1190 | 1160 |
| **CF Switches** | **SW3-3** | **SW3-2** | **SW3-1** | | | | | | | | | | |
| Cont. Fan Default: | OFF | OFF | OFF | 550 | 550 | 545 | 535 | 520 | See note 4 | | | | |
| | | | | | | | | | | | | | |
| Continuous Fan Airflow (SW3) | OFF | OFF | ON | 430 | 410 | 390 | 370 | 350 | See note 4 | | | | |
| | OFF | ON | OFF | 485 | 475 | 455 | 440 | 420 | See note 4 | | | | |
| | OFF | ON | ON | 550 | 550 | 545 | 535 | 520 | See note 4 | | | | |
| | ON | OFF | OFF | 550 | 550 | 545 | 535 | 520 | See note 4 | | | | |
| | ON | OFF | ON | 550 | 550 | 545 | 535 | 520 | See note 4 | | | | |
| | ON | ON | OFF | 550 | 550 | 545 | 535 | 520 | See note 4 | | | | |
| | ON | ON | ON | 550 | 550 | 545 | 535 | 520 | See note 4 | | | | |
| | | | | | | | | | | | | | |
| Heating (SW1) | High Heat Airflow[3] | | | 1235 | 1245 | 1250 | 1255 | 1255 | 1260 | 1255 | 1220 | 1190 | 1160 |
| | Low Heat Airflow[3] | | | 1005 | 1010 | 1015 | 1015 | 1020 | 1000 | 995 | 990 | 980 | 970 |
| | | | | | | | | | | | | | |
| **Unit size: 0802120** | **Clg/CF Switch settings** | | | **External Static Pressure (ESP)** | | | | | | | | | |
| **Clg Switches** | **SW2-3** | **SW2-2** | **SW2-1** | **0.1** | **0.2** | **0.3** | **0.4** | **0.5** | **0.6** | **0.7** | **0.8** | **0.9** | **1.0** |
| Clg Default: | OFF | OFF | OFF | 1745 | 1755 | 1755 | 1760 | 1755 | 1750 | 1745 | 1725 | 1705 | 1685 |
| **CF Switches** | **SW3-3** | **SW3-2** | **SW3-1** | | | | | | | | | | |
| Low-Clg Default: | OFF | OFF | OFF | 700 | 710 | 750 | 725 | 750 | See note 4 | | | | |
| | | | | | | | | | | | | | |
| Cooling Airflow (SW2) Low-Cooling Airflow (SW3) | OFF | OFF | ON | 700 | 710 | 750 | 725 | 750 | See note 4 | | | | |
| | OFF | ON | OFF | 830 | 860 | 870 | 890 | 960 | See note 4 | | | | |
| | OFF | ON | ON | 1045 | 1045 | 1060 | 1070 | 1070 | 1070 | 1095 | 1090 | 1080 | 1070 |
| | ON | OFF | OFF | 1215 | 1220 | 1245 | 1240 | 1235 | 1235 | 1225 | 1220 | 1235 | 1235 |
| | ON | OFF | ON | 1370 | 1370 | 1390 | 1390 | 1400 | 1395 | 1400 | 1390 | 1390 | 1385 |
| | ON | ON | OFF | 1745 | 1755 | 1755 | 1760 | 1755 | 1750 | 1745 | 1725 | 1705 | 1685 |
| | ON | ON | ON | 1745 | 1755 | 1755 | 1760 | 1755 | 1750 | 1745 | 1725 | 1705 | 1685 |
| | Maximum Clg Airflow[2] | | | 1920 | 1920 | 1945 | 1945 | 1945 | 1960 | 1950 | 1940 | 1915 | 1900 |
| **CF Switches** | **SW3-3** | **SW3-2** | **SW3-1** | | | | | | | | | | |
| Cont. Fan Default: | OFF | OFF | OFF | 700 | 710 | 750 | 725 | 750 | See note 4 | | | | |
| | | | | | | | | | | | | | |
| Continuous Fan Airflow (SW3) | OFF | OFF | ON | 700 | 710 | 750 | 725 | 750 | See note 4 | | | | |
| | OFF | ON | OFF | 830 | 860 | 870 | 890 | 960 | See note 4 | | | | |
| | OFF | ON | ON | 1045 | 1045 | 1060 | 1070 | 1070 | 1070 | 1095 | 1090 | 1080 | 1070 |
| | ON | OFF | OFF | 1215 | 1220 | 1245 | 1240 | 1235 | 1235 | 1225 | 1220 | 1235 | 1235 |
| | ON | OFF | ON | 1215 | 1220 | 1245 | 1240 | 1235 | 1235 | 1225 | 1220 | 1235 | 1235 |
| | ON | ON | OFF | 1215 | 1220 | 1245 | 1240 | 1235 | 1235 | 1225 | 1220 | 1235 | 1235 |
| | ON | ON | ON | 1215 | 1220 | 1245 | 1240 | 1235 | 1235 | 1225 | 1220 | 1235 | 1235 |
| | | | | | | | | | | | | | |
| Heating (SW1) | High Heat Airflow[3] | | | 1340 | 1355 | 1370 | 1385 | 1380 | 1385 | 1400 | 1400 | 1385 | 1380 |
| | Low Heat Airflow[3] | | | 1080 | 1115 | 1115 | 1120 | 1125 | 1135 | 1125 | 1120 | 1125 | 1110 |
| | | | | | | | | | | | | | |

# AIR DELIVERY - CFM (continued)

| AIR DELIVERY - CFM (with filter) | | | | | | | | | | | | | |
|---|---|---|---|---|---|---|---|---|---|---|---|---|---|
| Cooling[4] and Heating Air Delivery - CFM continued (Bottom Return[5] with Filter) | | | | | | | | | | | | | |
| (SW1-5 and SW4-3 set to OFF, except as indicated. See notes 1 and 2.) | | | | | | | | | | | | | |
| **Unit size: 1002122** | **Clg/CF Switch settings** | | | **External Static Pressure (ESP)** | | | | | | | | | |
| **Clg Switches** | **SW2-3** | **SW2-2** | **SW2-1** | **0.1** | **0.2** | **0.3** | **0.4** | **0.5** | **0.6** | **0.7** | **0.8** | **0.9** | **1.0** |
| Clg Default: | OFF | OFF | OFF | 1820 | 1825 | 1840 | 1845 | 1840 | 1835 | 1825 | 1805 | 1780 | 1770 |
| **CF Switches** | **SW3-3** | **SW3-2** | **SW3-1** | | | | | | | | | | |
| Low-Clg Default: | OFF | OFF | OFF | 750 | 740 | 745 | 730 | 715 | See note 4 | | | | |
| | | | | | | | | | | | | | |
| Cooling Airflow (SW2) Low-Cooling Airflow (SW3) | OFF | OFF | ON | 750 | 740 | 745 | 730 | 715 | See note 4 | | | | |
| | OFF | ON | OFF | 900 | 900 | 915 | 910 | 905 | See note 4 | | | | |
| | OFF | ON | ON | 1070 | 1075 | 1095 | 1095 | 1090 | 1085 | 1095 | 1080 | 1065 | 1070 |
| | ON | OFF | OFF | 1280 | 1285 | 1305 | 1305 | 1310 | 1305 | 1295 | 1300 | 1290 | 1285 |
| | ON | OFF | ON | 1440 | 1445 | 1465 | 1465 | 1470 | 1485 | 1480 | 1485 | 1475 | 1460 |
| | ON | ON | OFF | 1820 | 1825 | 1840 | 1845 | 1840 | 1835 | 1825 | 1805 | 1780 | 1770 |
| | ON | ON | ON | 2135 | 2140 | 2140 | 2135 | 2140 | 2130 | 2115 | 2100 | 2070 | 2015 |
| | Maximum Clg Airflow[2] | | | 2160 | 2165 | 2175 | 2170 | 2160 | 2150 | 2135 | 2120 | 2065 | 2020 |
| **CF Switches** | **SW3-3** | **SW3-2** | **SW3-1** | | | | | | | | | | |
| Cont. Fan Default: | OFF | OFF | OFF | 750 | 740 | 745 | 730 | 715 | See note 4 | | | | |
| | | | | | | | | | | | | | |
| Continuous Fan Airflow (SW3) | OFF | OFF | ON | 750 | 740 | 745 | 730 | 715 | See note 4 | | | | |
| | OFF | ON | OFF | 900 | 900 | 915 | 910 | 905 | See note 4 | | | | |
| | OFF | ON | ON | 1070 | 1075 | 1095 | 1095 | 1090 | 1085 | 1095 | 1080 | 1065 | 1070 |
| | ON | OFF | OFF | 1070 | 1075 | 1095 | 1095 | 1090 | 1085 | 1095 | 1080 | 1065 | 1070 |
| | ON | OFF | ON | 1070 | 1075 | 1095 | 1095 | 1090 | 1085 | 1095 | 1080 | 1065 | 1070 |
| | ON | ON | OFF | 1070 | 1075 | 1095 | 1095 | 1090 | 1085 | 1095 | 1080 | 1065 | 1070 |
| | ON | ON | ON | 1070 | 1075 | 1095 | 1095 | 1090 | 1085 | 1095 | 1080 | 1065 | 1070 |
| | | | | | | | | | | | | | |
| Heating (SW1) | High Heat Airflow[3] | | | 1570 | 1575 | 1595 | 1595 | 1600 | 1605 | 1600 | 1600 | 1590 | 1575 |
| | Low Heat Airflow[3] | | | 1365 | 1385 | 1395 | 1395 | 1395 | 1400 | 1400 | 1405 | 1395 | 1380 |
| | | | | | | | | | | | | | |
| **Unit size: 1202422** | **Clg/CF Switch settings** | | | **External Static Pressure (ESP)** | | | | | | | | | |
| **Clg Switches** | **SW2-3** | **SW2-2** | **SW2-1** | **0.1** | **0.2** | **0.3** | **0.4** | **0.5** | **0.6** | **0.7** | **0.8** | **0.9** | **1.0** |
| Clg Default: | OFF | OFF | OFF | 1845 | 1840 | 1835 | 1835 | 1825 | 1820 | 1810 | 1800 | 1785 | 1775 |
| **CF Switches** | **SW3-3** | **SW3-2** | **SW3-1** | | | | | | | | | | |
| Low-Clg Default: | OFF | OFF | OFF | 895 | 915 | 915 | 915 | 915 | See note 4 | | | | |
| | | | | | | | | | | | | | |
| Cooling Airflow (SW2) Low-Cooling Airflow (SW3) | OFF | OFF | ON | 715 | 725 | 720 | 710 | 705 | See note 4 | | | | |
| | OFF | ON | OFF | 895 | 915 | 915 | 915 | 915 | See note 4 | | | | |
| | OFF | ON | ON | 1070 | 1090 | 1105 | 1115 | 1115 | 1110 | 1115 | 1120 | 1120 | 1110 |
| | ON | OFF | OFF | 1240 | 1265 | 1280 | 1295 | 1295 | 1305 | 1305 | 1305 | 1315 | 1315 |
| | ON | OFF | ON | 1520 | 1520 | 1515 | 1505 | 1495 | 1490 | 1480 | 1465 | 1455 | 1445 |
| | ON | ON | OFF | 1845 | 1840 | 1835 | 1835 | 1825 | 1820 | 1810 | 1800 | 1785 | 1775 |
| | ON | ON | ON | 2150 | 2145 | 2140 | 2145 | 2135 | 2130 | 2115 | 2100 | 2065 | 1985 |
| | Maximum Clg Airflow[2] | | | 2150 | 2145 | 2140 | 2145 | 2135 | 2130 | 2115 | 2100 | 2065 | 1985 |
| **CF Switches** | **SW3-3** | **SW3-2** | **SW3-1** | | | | | | | | | | |
| Cont. Fan Default: | OFF | OFF | OFF | 895 | 915 | 915 | 915 | 915 | See note 4 | | | | |
| | | | | | | | | | | | | | |
| Continuous Fan Airflow (SW3) | OFF | OFF | ON | 715 | 725 | 720 | 710 | 705 | See note 4 | | | | |
| | OFF | ON | OFF | 805 | 820 | 815 | 810 | 810 | See note 4 | | | | |
| | OFF | ON | ON | 895 | 915 | 915 | 915 | 915 | See note 4 | | | | |
| | ON | OFF | OFF | 895 | 915 | 915 | 915 | 915 | See note 4 | | | | |
| | ON | OFF | ON | 895 | 915 | 915 | 915 | 915 | See note 4 | | | | |
| | ON | ON | OFF | 895 | 915 | 915 | 915 | 915 | See note 4 | | | | |
| | ON | ON | ON | 895 | 915 | 915 | 915 | 915 | See note 4 | | | | |
| | | | | | | | | | | | | | |
| Heating (SW1) | High Heat Airflow[3] | | | 1825 | 1820 | 1815 | 1800 | 1800 | 1795 | 1785 | 1775 | 1760 | 1745 |
| | Low Heat Airflow[3] | | | 1555 | 1555 | 1550 | 1550 | 1545 | 1525 | 1520 | 1505 | 1495 | 1485 |
| | | | | | | | | | | | | | |

**NOTES** following table.

1. Nominal 350 CFM/ton cooling airflow is delivered with SW1-5 and SW4-3 set to OFF.
   Set SW1-5 to ON for nominal 400 CFM/ton (+15% airflow).
   Set SW4-3 to ON for nominal 325 CFM/ton (-7% airflow).
   Set both SW1-5 and SW4-3 to ON for nominal 370 CFM/ton (+7% airflow).
   **This applies to Cooling and Low-Cooling airflows, but does not affect continuous fan airflows.**
2. The above adjustments in airflow are subject to motor horsepower range/capacity
3. Maximum cooling airflow is achieved when switches SW2-1, SW2-2, SW2-3 and SW1-5 are set to ON, and SW4-3 is set to OFF.
4. All heating CFM's are when comfort/efficiency adjustment switch (SW1-4) is set to OFF.
5. Ductwork must be sized for high-heating CFM within the operational range of ESP. Operation within the blank areas of the chart is not recommended because high-heat operation will be above 1.0 ESP.
6. All airflows on 21" (533 mm) casing size furnaces are 5% less on side return only installations.

## ACCESSORIES

| PART NUMBER | COMPONENT NAME | DESCRIPTION | 0601714 | 0801714 | 0802120 | 1002122 | 1202422 |
|---|---|---|---|---|---|---|---|
| NAHB001101CT | EXTERNAL TRAP KIT | CONDENSATE TRAP | X | X | X | X | X |
| NAHA00110DA | DRAIN ACCESSORY | 1/2” CPVC to 3/4” PVC (10 PACK) | X | X | X | X | X |
| NAHA002CV | VENT TERMINATION KIT | 2” CONCENTRIC VENT | X | X | X | X | - |
| NAHA001CV | | 3” CONCENTRIC VENT | X | X | X | X | X |
| NAHA00101VC | INTERNAL VENT KIT | THROUGH THE CABINET | X | X | X | X | X |
| NAHA00301VT | DIRECT VENT TERMINATION KIT | 2” BRACKET | X | X | X | X | - |
| NAHA00401VT | | 3” BRACKET | X | X | X | X | X |
| NAHA00101CK | INLET AIR PIPE COUPLING | COUPLING FOR POLYPROPYLENE VENT SYSTEMS | X | X | X | X | X |
| NAHA00101HV | HORIZONTAL INSTALLATION KIT | TRAP GROMMET (direct Vent application only) | X | X | X | X | X |
| NAHA00101HH | FREEZE PROTECT KIT | CONDENSATE DRAIN LINE - Tape | X | X | X | X | X |
| NAHA00201HH | CONDENSATE FREEZE PROTECT KIT | CONDENSATE TRAP WITH HEAT PAD | X | X | X | X | X |
| NAHA01101SB | FLOOR BASE KIT | COMBUSTIBLE FLOOR | X | X | X | X | X |
| AGAGC9NPS01B | GAS CONVERSION KIT | NATURAL TO PROPANE | X | X | X | X | X |
| AGAGC9PNS01B | | PROPANE TO NATURAL | X | X | X | X | X |
| 1188594* | GAS VALVE TOWER PORT ADAPTER KIT | ADAPTER FOR GAS VALVE | X | X | X | X | X |
| 325531-402† | WASHABLE FILTER | 3/4” X 16” x 25” WASHABLE FILTER | X | X | - | - | - |
| 325531-403† | | 3/4” X 20” x 25” WASHABLE FILTER | - | - | X | X | - |
| 325531-404† | | 3/4” X 24” x 25” WASHABLE FILTER | - | - | - | - | X |
| FHG1625-2† | ELTERNAL BOTTOM FILTER RACK | 16” x 25” W/O FILTER | X | X | - | - | - |
| FHG2025-2† | | 20” x 25” W/O FILTER | - | - | X | X | - |
| FHG2424-2† | | 24-1/2” x 24” W/O FILTER | - | - | - | - | X |
| NAHB00101CA | COIL ADAPTER KIT | WITH NO OFFSET | X | X | X | X | X |
| NAHB00201CA | | WITH SINGLE OFFSET | X | X | X | X | X |
| NAHB00301CA | | WITH DOUBLE OFFSET | X | X | X | X | X |
| NAHA01701RA | RETURN AIR KIT | 17-1/2” wide | X | X | - | - | - |
| NAHA02101RA | | 21” wide | - | - | X | X | |
| NAHA02401RA | | 24-1/2” wide | - | - | - | - | X |
| SYST0101CW | ION CONTROL SYSTEM | SELF-CONFIGURING COMMUNICATING CONTROL | X | X | X | X | X |
| NAHA001NK | CONDENSATE NEUTRALIZER KIT | NEUTRALIZES CONDENSATE | X | X | X | X | X |

*. Factory authorized and filed installed. Gas conversion kits are CSA recognized.
†. Order through FAST Parts
X = Accessory available

## ORIFICES

| Part Number | Gas Type | Orifice Size |
|---|---|---|
| 1185612 | Natural | 42 |
| 1176928 | Natural | 43 |
| 1185574 | Natural | 44 |
| 1177213 | Natural | 45 |

| Part Number | Gas Type | Orifice Size |
|---|---|---|
| 1183809 | Natural | 46 |
| 1185613 | Natural | 47 |
| 1185614 | Natural | 48 |

| Part Number | Gas Type | Orifice Size |
|---|---|---|
| 1184256 | Propane | 54 |
| 1185615 | Propane | 55 |
| 1185616 | Propane | 56 |
| 1185617 | Propane | 1.25 mm |
| 1185618 | Propane | 1.30 mm |

© 2021 Carrier. All rights reserved.

Manufacturer reserves the right to change, at any time, specifications and designs without notice and without obligations.