# G97CMN
# Modulating, 4-Way Multipoise
# Variable Speed, Condensing Gas Furnace

# Product Specifications

**SYST0101CW Recommended (sold separately)**

A200356

Illustrations and photographs are only representative. Some product models may vary.

## ⚠ WARNING

**CARBON MONOXIDE POISONING AND FIRE HAZARD**

Failure to follow this warning could result in personal injury, death, and/or property damage.

This furnace is not designed for use in recreation vehicles, manufactured (mobile) homes or outdoors.

Failure to follow this warning could result in personal injury, death, and/or property damage.

Use of the AHRI Certified TM Mark indicates a manufacturer's participation in the program. For verification of certification for individual products, go to www.ahridirectory.org .

ISO 9001 Quality

A200326

## EASIER TO SELL

- Up to 98% AFUE in upflow and horizontal positions
  Up to 96.7% AFUE in downflow
- Modulating heating operation (40% - 100% capacity)
- ION™ Communicating Control System
- Xtra SEER Variable speed ECM blower motor
- Supports single and multi-stage cooling units
- Dehumidification feature in cooling
- All sizes can be installed in California air quality management districts with a 40 ng/J NOx emissions limit.
- Cabinet air leakage less than 2.0% at 1.0 in. W.C. and cabinet air leakage less than 1.4% at 0.5 in. W.C. when tested in accordance with ASHRAE standard 193

## TOUGHER

- Flame roll-out sensors standard
- Adjustable heating blower OFF delay
- Factory set blower ON delay
- RPJ® primary heat exchanger
- Stainless steel secondary heat exchanger
- High temperature limit control designed to prevent overheating
- Direct ignition with Silicon Nitride ignitor

## QUIETER

- Operates quieter at lower heating rates
- Variable speed induced draft combustion blower
- Variable speed, constant airflow, communicating ECM blower motor
- Insulated steel cabinet

## EASIER TO INSTALL AND SERVICE

- Direct vent (2-pipe) or ventilated combustion air
- 24 VAC humidifier terminal
- Electronic air cleaner terminal
- 35” (889mm) high, for ease of installation and room for service
- Quarter turn knobs for easy door removal and secure attachment
- Factory shipped for natural gas, with propane gas conversion kits available
- Four position - upflow/downflow/horizontal (left/right) installation
- At least twelve different venting configurations
- Through the casing flue pipe for counterflow or horizontal applications with accessory kit (order separately)
- Concentric vent available
- Simple troubleshooting of gas valve
- Self-configuring and communicating control
- Slide out heat exchanger assembly and blower assembly

## LIMITED WARRANTY *

- 10 year No Hassle Replacement™ limited warranty
- Lifetime heat exchanger limited warranty with timely registration
- 5 year parts limited warranty
  - With timely registration, an additional 5 year parts limited warranty
  * For residential applications only. See warranty certificate for complete details and restrictions, including warranty coverage for other applications.

| Model Number | Input (BTUH) | Efficiency AFUE | | ENERGY STAR® | Cooling Capacity CFM range @ .5 in. w.c. (125 Pa) | Dimensions H x W x D Inches (Millimeters) | Shipping Wt. Lbs (Kg) |
|---|---|---|---|---|---|---|---|
| | | Upflow/Hz | Downflow | | | | |
| G97CMN0601714A | 60,000 | 97.0% | 95.0% | X | 510-1335 | 35 x 17-1/2 x 29-1/2 (889 x 445 x 750) | 154 (69) |
| G97CMN0602120A | 60,600 | 98.0% | 96.7% | X | 540-1905 | 35 x 21 x 29-1/2 (889 x 533 x 750) | 159 (72) |
| G97CMN0801714A | 80,000 | 97.0% | 95.0% | X | 490-1375 | 35 x 17-1/2 x 29-1/2 (889 x 445 x 750) | 164 (74) |
| G97CMN0802120A | 80,000 | 97.0% | 95.0% | X | 750-1945 | 35 x 21 x 29-1/2 (889 x 533 x 750) | 169 (77) |
| G97CMN1002122A | 100,000 | 97.0% | 95.0% | X | 715-2160 | 35 x 21 x 29-1/2 (889 x 533 x 750) | 179 (80) |
| G97CMN1202422A | 120,000 | 97.0% | 95.0% | X | 680-2185 | 35 x 24-1/2 x 29-1/2 (889 x 622 x 750) | 203 (91) |

# MODEL NUMBER NOMENCLATURE

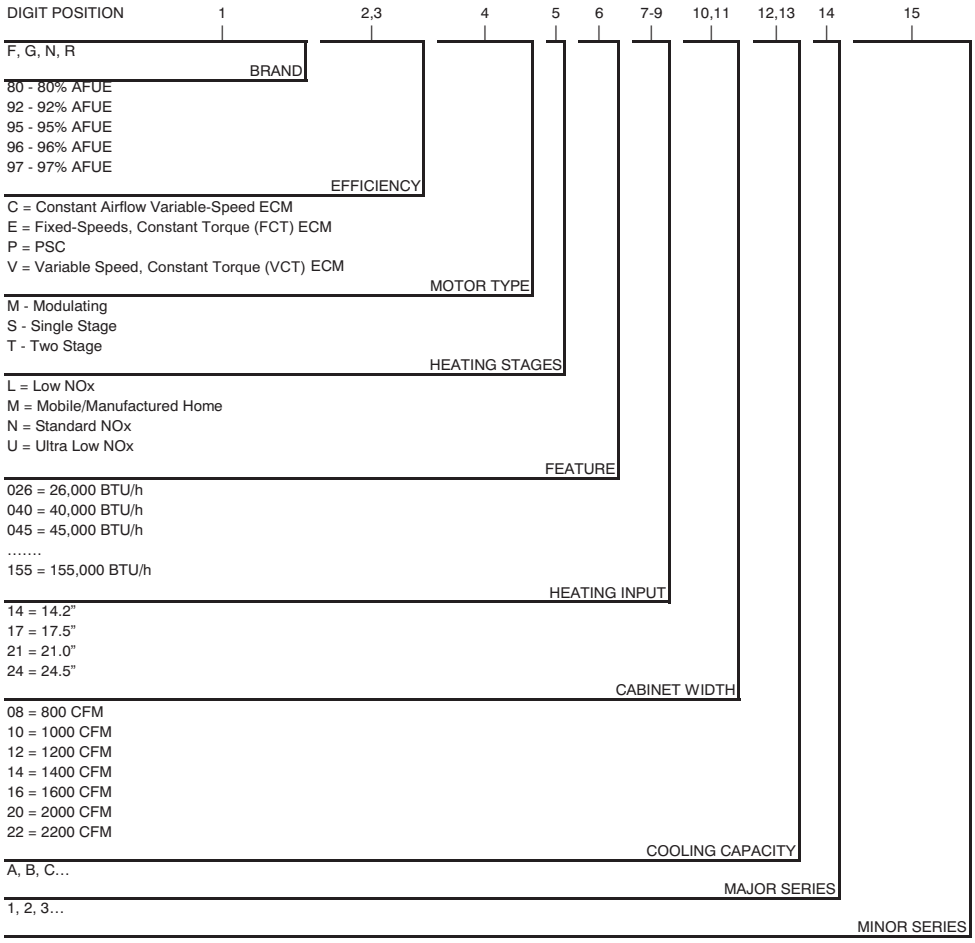


A190043

For California Residents:
For installation in SCAQMD only: This furnace does not meet the SCAQMD Rule 1111 14 ng/J NOx emission limit, and thus is subject to a mitigation fee of up to $450. This furnace is not eligible for the Clean Air Furnace Rebate Program: www.CleanAirFurnaceRebate.com

# FURNACE COMPONENTS

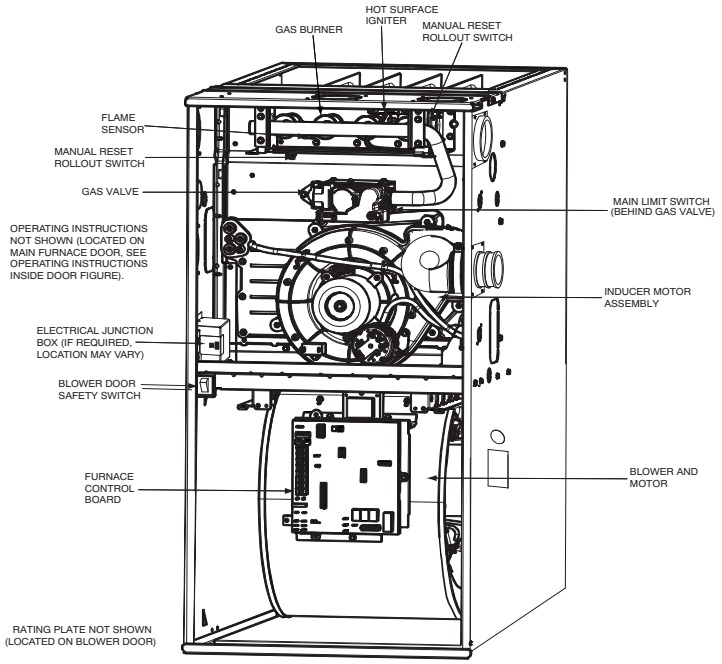


A190145

# MINIMUM CLEARANCES TO COMBUSTIBLE MATERIALS FOR ALL UNITS - IN(MM)

| POSITION | CLEARANCE |
|---|---|
| REAR | 0 |
| FRONT (Combustion air openings in furnace and in structure) | 1 (25) |
| Required for service* | 24 (610) |
| All Sides of Supply Plenum* | 1 (25) |
| Sides | 0 |
| Vent | 0 |
| Top of Furnace | 1 (25) |

*. Consult your local building codes.

# DIMENSIONAL DRAWING

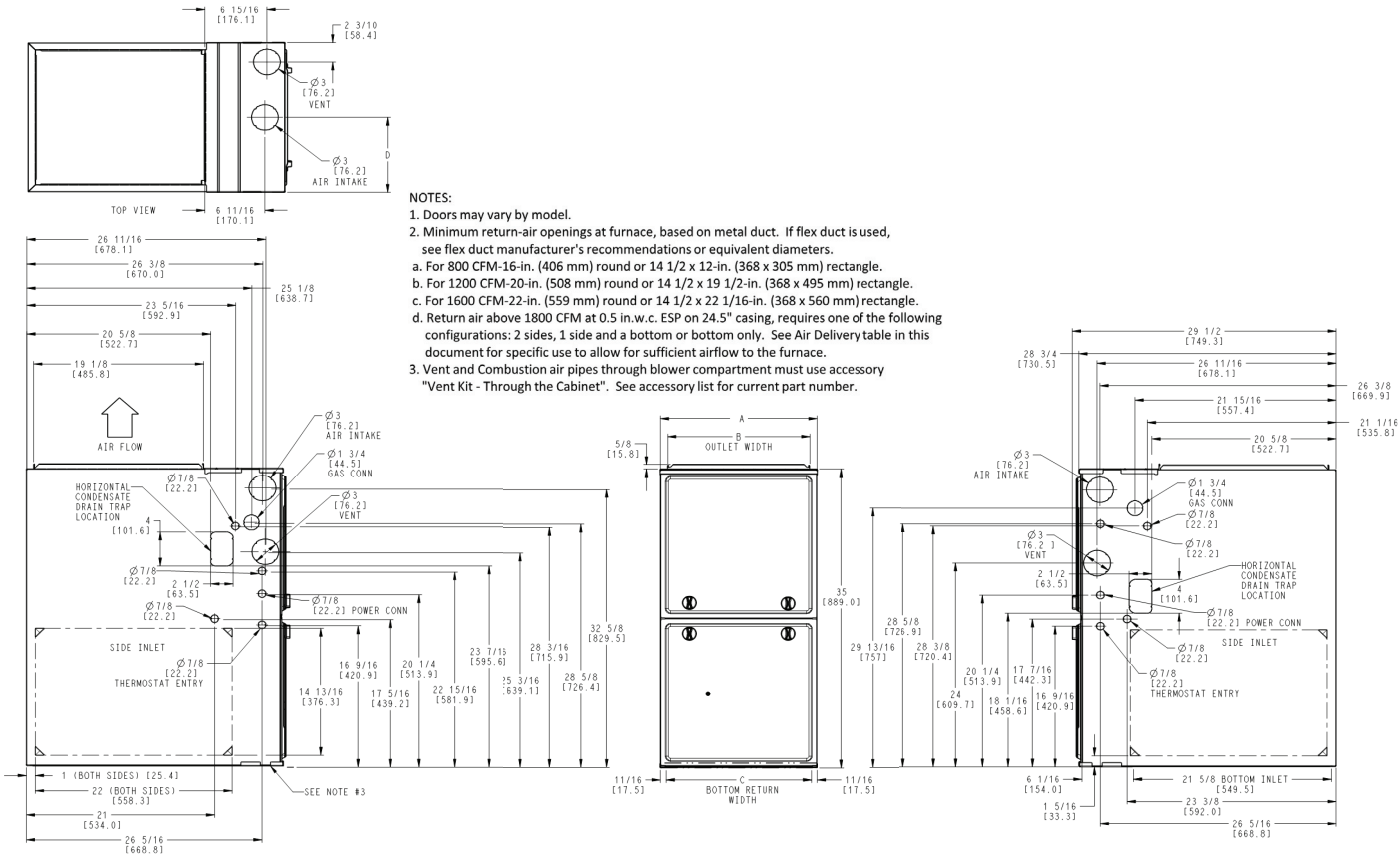


NOTES:
1. Doors may vary by model.
2. Minimum return-air openings at furnace, based on metal duct. If flex duct is used, see flex duct manufacturer's recommendations or equivalent diameters.
   a. For 800 CFM-16-in. (406 mm) round or 14 1/2 x 12-in. (368 x 305 mm) rectangle.
   b. For 1200 CFM-20-in. (508 mm) round or 14 1/2 x 19 1/2-in. (368 x 495 mm) rectangle.
   c. For 1600 CFM-22-in. (559 mm) round or 14 1/2 x 22 1/16-in. (368 x 560 mm) rectangle.
   d. Return air above 1800 CFM at 0.5 in.w.c. ESP on 24.5" casing, requires one of the following configurations: 2 sides, 1 side and a bottom or bottom only. See Air Delivery table in this document for specific use to allow for sufficient airflow to the furnace.
3. Vent and Combustion air pipes through blower compartment must use accessory "Vent Kit - Through the Cabinet". See accessory list for current part number.

NOTE: ALL DIMENSIONS IN INCH (MM)

U.S. ECCN: Not Subject to Regulation (N.S.R.)

A200327

| FURNACE SIZE | A | B | C | D | SHIP WT. |
|---|---|---|---|---|---|
| | CABINET WIDTH | OUTLET WIDTH | BOTTOM INLET WIDTH | AIR INTAKE | LB (KG) |
| 0601714 | 17-1/2 (445) | 15-7/8 (403) | 16 (406) | 8-3/4 (222) | 147.5 (66.9) |
| 0602120 | 21 (533) | 19-3/8 (492) | 19-1/2 (495) | 10-1/2 (267) | 165.5 (75.1) |
| 0801714 | 17-1/2 (445) | 15-7/8 (403) | 16 (406) | 8-3/4 (222) | 151.5 (68.7) |
| 0802120 | 21 (533) | 19-3/8 (492) | 19-1/2 (495) | 10-1/2 (267) | 169.5 (76.9) |
| 1002122 | 21 (533) | 19-3/8 (492) | 19-1/2 (495) | 10-1/2 (267) | 176.5 (80.0) |
| 1202422 | 24-1/2 (622) | 22-7/8 (581) | 23 (584) | 12-1/4 (311) | 201.0 (91.2) |

**Manufacturer reserves the right to change, at any time, specifications and designs without notice and without obligations.**

# PHYSICAL DATA

| Heating Capacity and Efficiency | | | 0601714 | 0602120 | 0801714 | 0802120 | 1002122 | 1202422 |
|---|---|---|---|---|---|---|---|---|
| Input | Maximum Heat | (BTUH) | 60,000 | 60,600 | 80,000 | 80,000 | 100,000 | 120,000 |
| | Intermediate Heat | (BTUH) | 39,000 | 39,000 | 52,000 | 52,000 | 65,000 | 78,000 |
| | Minimum Heat | (BTUH) | 24,000 | 24,000 | 32,000 | 32,000 | 40,000 | 48,000 |
| Output | Maximum Heat | (BTUH) | 59,000 | 60,000 | 78,000 | 78,000 | 98,000 | 117,000 |
| | Intermediate Heat | (BTUH) | 38,000 | 39,000 | 51,000 | 51,000 | 64,000 | 76,000 |
| | Minimum Heat | (BTUH) | 24,000 | 24,000 | 31,000 | 31,000 | 39,000 | 47,000 |
| Certified Temperature Rise Range ºF (ºC) | | Maximum Heat | 35 - 65 (19 - 36) | 35 - 65 (19 - 36) | 40 - 70 (22 - 39) | 40 - 70 (22 - 39) | 45 - 75 (25 - 42) | 45 - 75 (25 - 42) |
| | | Intermediate Heat | 50 - 80 (28 - 44) | 40 - 70 (22 - 39) | 50 - 80 (28 - 44) | 50 - 80 (28 - 44) | 50 - 80 (28 - 44) | 50 - 80 (28 - 44) |
| | | Minimum Heat | 35 - 65 (19 - 36) | 25 - 55 (14-31) | 35 - 65 (19 - 36) | 35 - 65 (19 - 36) | 35 - 65 (19 - 36) | 35 - 65 (19 - 36) |
| Airflow Capacity and Blower Data | | | | | | | | |
| Rated External Static Pressure (in. w.c.) | | Heating | 0.12 | 0.12 | 0.15 | 0.15 | 0.20 | 0.20 |
| | | Cooling | 0.5 | 0.5 | 0.5 | 0.5 | 0.5 | 0.5 |
| Airflow Delivery @ Rated ESP (CFM) | | Maximum Heat | 1075 | 1080 | 1500 | 1345 | 1575 | 1820 |
| | | Intermediate Heat | 530 | 690 | 750 | 795 | 955 | 1100 |
| | | Minimum Heat | 415 | 555 | 620 | 595 | 745 | 900 |
| | | Cooling | 1335 | 1905 | 1375 | 1945 | 2160 | 2185 |
| Cooling Capacity (tons) | | 400 CFM/ton | 3 | 4.5 | 3.5 | 4.5 | 5.5 | 5.5 |
| | | 350 CFM/ton | 3.5 | 5.5 | 4 | 5.5 | 6 | 6 |
| Direct-Drive Motor Type | | | Electronically Commutated Motor (ECM) | | | | | |
| Direct-Drive Motor HP | | | 1/2 | 1 | 1/2 | 1 | 1 | 1 |
| Motor Full Load Amps | | | 7.7 | 12.8 | 7.7 | 12.8 | 12.8 | 12.8 |
| RPM Range | | | 300 - 1300 | | | | | |
| Speed Selections | | | Variable (Communicating) | | | | | |
| Blower Wheel Dia x Width | | in. | 11 x 8 | 11 x 10 | 11 x 8 | 11 x 10 | 11 x 10 | 11 x 11 |
| Air Filtration System | | | Field Supplied Filter | | | | | |
| Filter Used for Certified Watt Data* | | | 325531-20* | | | | | |
| Electrical Data | | | | | | | | |
| Input Voltage | | Volts-Hertz-Phase | 115-60-1 | | | | | |
| Operating Voltage Range | | Min-Max | 104 -127 | | | | | |
| Maximum Input Amps | | Amps | 9.0 | 14.1 | 9.0 | 14.1 | 14.1 | 14.1 |
| Unit Ampacity | | Amps | 12.0 | 18.4 | 12.0 | 18.4 | 18.4 | 18.4 |
| Minimum Wire Size | | AWG | 14 | 12 | 14 | 12 | 12 | 12 |
| Maximum Wire Length @ Minimum Wire Size | | Feet | 30 | 31 | 30 | 31 | 31 | 31 |
| | | (M) | (9.4) | (9.5) | (9.4) | (9.5) | (9.5) | (9.5) |
| Maximum Fuse/Ckt Bkr (Time-Delay Type Recommended) | | Amps | 15 | 20 | 15 | 20 | 20 | 20 |
| Transformer Capacity (24vac output) | | | 40 VA | | | | | |
| External Control Power Available | | Heating | 27.9 VA | | | | | |
| | | Cooling | 34.6 VA | | | | | |
| Controls | | | | | | | | |
| Gas Connection Size | | | 1/2" - NPT | | | | | |
| Burners (Monoport) | | | 3 | 3 | 4 | 4 | 5 | 6 |
| Gas Valve (Redundant) | | Manufacturer | White Rogers | | | | | |
| Minimum Inlet Gas pressure (in. wc) | | | 4.5 | | | | | |
| Maximum Inlet Gas pressure (in. wc) | | | 13.6 | | | | | |
| Manufactured (Mobile) Home Kit | | | not approved for MH use | | | | | |
| Twinning Kit | | | not approved for twinning | | | | | |
| Ignition Device | | | Silicon Nitride | | | | | |
| Heating Blower Control (Heating Off-Delay) | | | Adjustable: 90, 120, 150, 180 seconds | | | | | |
| Cooling Blower Control (Time Delay Relay) | | | 90 seconds | | | | | |
| Communication System | | | ION™ Communicating Control SYST0101CW | | | | | |
| Thermostat Connections | | | R, W/W1, W2 Y/Y2, Y1, G, Com 24V, DHUM | | | | | |
| Accessory Connections | | | EAC (115vac); HUM (24vac); 1-stg AC (via Y/Y2) | | | | | |

*. See Accessory List for part numbers available.

**Manufacturer reserves the right to change, at any time, specifications and designs without notice and without obligations.**

# AIR DELIVERY - CFM

## Cooling[4] and Heating Air Delivery - CFM (Bottom Return[5] With Filter)

(SW1-5 and SW4-3 set to OFF, except as indicated. See notes 1 and 2.)

| Unit Size: 0601714 | Clg/CF Switch settings | | | External Static Pressure (ESP) | | | | | | | | | |
|---|---|---|---|---|---|---|---|---|---|---|---|---|---|
| **Clg Switches** | **SW2-3** | **SW2-2** | **SW2-1** | **0.1** | **0.2** | **0.3** | **0.4** | **0.5** | **0.6** | **0.7** | **0.8** | **0.9** | **1.0** |
| **Clg Default:** | OFF | OFF | OFF | 1060 | 1070 | 1080 | 1080 | 1075 | 1065 | 1050 | 1035 | 1025 | 1010 |
| **CF Switches** | **SW3-3** | **SW3-2** | **SW3-1** | | | | | | | | | | |
| **Low-Clg Default:** | OFF | OFF | OFF | 545 | 530 | 520 | 525 | 510 | See note 4 | | | | |
| **Cooling Airflow (SW2) Low-Cooling Airflow (SW3)** | OFF | OFF | ON | 545 | 530 | 520 | 525 | 510 | See note 4 | | | | |
| | OFF | ON | OFF | 710 | 710 | 710 | 695 | 690 | See note 4 | | | | |
| | OFF | ON | ON | 875 | 880 | 890 | 895 | 895 | 890 | 885 | 880 | 870 | 855 |
| | ON | OFF | OFF | 1060 | 1070 | 1080 | 1080 | 1075 | 1065 | 1050 | 1035 | 1025 | 1010 |
| | ON | OFF | ON | 1235 | 1240 | 1250 | 1255 | 1255 | 1250 | 1230 | 1190 | 1155 | 1115 |
| | ON | ON | OFF | 1235 | 1240 | 1250 | 1255 | 1255 | 1250 | 1230 | 1190 | 1155 | 1115 |
| | ON | ON | ON | 1235 | 1240 | 1250 | 1255 | 1255 | 1250 | 1230 | 1190 | 1155 | 1115 |
| | **Maximum Clg Airflow[2]** | | | 1425 | 1425 | 1405 | 1370 | 1335 | 1300 | 1260 | 1225 | 1190 | 1155 |
| **CF Switches** | **SW3-3** | **SW3-2** | **SW3-1** | | | | | | | | | | |
| **Cont. Fan Default:** | OFF | OFF | OFF | 545 | 530 | 520 | 525 | 510 | See note 4 | | | | |
| **Continuous Fan Airflow (SW3)** | OFF | OFF | ON | 545 | 530 | 520 | 525 | 510 | See note 4 | | | | |
| | OFF | ON | OFF | 710 | 710 | 710 | 695 | 690 | See note 4 | | | | |
| | OFF | ON | ON | 875 | 880 | 890 | 895 | 895 | 890 | 885 | 880 | 870 | 855 |
| | ON | OFF | OFF | 1060 | 1070 | 1080 | 1080 | 1075 | 1065 | 1050 | 1035 | 1025 | 1010 |
| | ON | OFF | ON | 1060 | 1070 | 1080 | 1080 | 1075 | 1065 | 1050 | 1035 | 1025 | 1010 |
| | ON | ON | OFF | 1060 | 1070 | 1080 | 1080 | 1075 | 1065 | 1050 | 1035 | 1025 | 1010 |
| | ON | ON | ON | 1060 | 1070 | 1080 | 1080 | 1075 | 1065 | 1050 | 1035 | 1025 | 1010 |
| **Heating (SW1)** | **Maximum Heat Airflow[3]** | | | 1075 | 1085 | 1095 | 1095 | 1090 | 1080 | 1065 | 1050 | 1035 | 1020 |
| | **Intermediate Heat Airflow[3]** | | | 535 | 515 | 505 | 515 | 495 | See note 4 | | | | |
| | **Minimum Heat Airflow[3]** | | | 420 | 410 | 415 | 400 | 380 | See note 4 | | | | |
| **Unit Size: 0602120** | **Clg/CF Switch settings** | | | **External Static Pressure (ESP)** | | | | | | | | | |
| **Clg Switches** | **SW2-3** | **SW2-2** | **SW2-1** | **0.1** | **0.2** | **0.3** | **0.4** | **0.5** | **0.6** | **0.7** | **0.8** | **0.9** | **1.0** |
| **Clg Default:** | OFF | OFF | OFF | 1735 | 1735 | 1725 | 1715 | 1700 | 1685 | 1665 | 1650 | 1625 | 1605 |
| **CF Switches** | **SW3-3** | **SW3-2** | **SW3-1** | | | | | | | | | | |
| **Low-Clg Default:** | OFF | OFF | OFF | 540 | 525 | 525 | 520 | 540 | See note 4 | | | | |
| **Cooling Airflow (SW2) Low-Cooling Airflow (SW3)** | OFF | OFF | ON | 540 | 525 | 525 | 520 | 540 | See note 4 | | | | |
| | OFF | ON | OFF | 680 | 725 | 725 | 720 | 720 | See note 4 | | | | |
| | OFF | ON | ON | 925 | 915 | 910 | 895 | 900 | 890 | 875 | 865 | 860 | 855 |
| | ON | OFF | OFF | 1070 | 1075 | 1080 | 1070 | 1080 | 1075 | 1055 | 1045 | 1030 | 1020 |
| | ON | OFF | ON | 1215 | 1245 | 1235 | 1220 | 1220 | 1210 | 1200 | 1195 | 1185 | 1175 |
| | ON | ON | OFF | 1380 | 1385 | 1395 | 1390 | 1395 | 1390 | 1380 | 1365 | 1355 | 1340 |
| | ON | ON | ON | 1735 | 1735 | 1725 | 1715 | 1700 | 1685 | 1665 | 1650 | 1625 | 1605 |
| | **Maximum Clg Airflow[2]** | | | 1955 | 1950 | 1940 | 1925 | 1905 | 1885 | 1855 | 1815 | 1745 | 1685 |
| **CF Switches** | **SW3-3** | **SW3-2** | **SW3-1** | | | | | | | | | | |
| **Cont. Fan Default:** | OFF | OFF | OFF | 540 | 525 | 525 | 520 | 540 | See note 4 | | | | |
| **Continuous Fan Airflow (SW3)** | OFF | OFF | ON | 540 | 525 | 525 | 520 | 540 | See note 4 | | | | |
| | OFF | ON | OFF | 680 | 725 | 725 | 720 | 720 | See note 4 | | | | |
| | OFF | ON | ON | 925 | 915 | 910 | 895 | 900 | 890 | 875 | 865 | 860 | 855 |
| | ON | OFF | OFF | 925 | 915 | 910 | 895 | 900 | 890 | 875 | 865 | 860 | 855 |
| | ON | OFF | ON | 925 | 915 | 910 | 895 | 900 | 890 | 875 | 865 | 860 | 855 |
| | ON | ON | OFF | 925 | 915 | 910 | 895 | 900 | 890 | 875 | 865 | 860 | 855 |
| | ON | ON | ON | 925 | 915 | 910 | 895 | 900 | 890 | 875 | 865 | 860 | 855 |
| **Heating (SW1)** | **Maximum Heat Airflow[3]** | | | 1080 | 1085 | 1095 | 1090 | 1095 | 1085 | 1070 | 1055 | 1045 | 1030 |
| | **Intermediate Heat Airflow[3]** | | | 685 | 725 | 730 | 725 | 730 | See note 4 | | | | |
| | **Minimum Heat Airflow[3]** | | | 560 | 555 | 555 | 550 | 565 | See note 4 | | | | |

## Cooling[4] and Heating Air Delivery - CFM (Bottom Return[5] With Filter) (Continued)

| (SW1-5 and SW4-3 set to OFF, except as indicated. See notes 1 and 2.) | | | | | | | | | | | | | |
|---|---|---|---|---|---|---|---|---|---|---|---|---|---|
| **Unit Size: 0801714** | **Clg/CF Switch settings** | | | **External Static Pressure (ESP)** | | | | | | | | | |
| **Clg Switches** | SW2-3 | SW2-2 | SW2-1 | 0.1 | 0.2 | 0.3 | 0.4 | 0.5 | 0.6 | 0.7 | 0.8 | 0.9 | 1.0 |
| **Clg Default:** | OFF | OFF | OFF | 1055 | 1065 | 1080 | 1075 | 1065 | 1050 | 1045 | 1035 | 1025 | 1005 |
| **CF Switches** | **SW3-3** | **SW3-2** | **SW3-1** | | | | | | | | | | |
| **Low-Clg Default:** | OFF | OFF | OFF | 520 | 505 | 505 | 495 | 490 | See note 4 | | | | |
| **Cooling Airflow (SW2) Low-Cooling Airflow (SW3)** | OFF | OFF | ON | 520 | 505 | 505 | 495 | 490 | See note 4 | | | | |
| | OFF | ON | OFF | 665 | 685 | 680 | 660 | 665 | See note 4 | | | | |
| | OFF | ON | ON | 885 | 895 | 905 | 900 | 900 | 895 | 885 | 875 | 860 | 845 |
| | ON | OFF | OFF | 1055 | 1065 | 1080 | 1075 | 1065 | 1050 | 1045 | 1035 | 1025 | 1005 |
| | ON | OFF | ON | 1245 | 1245 | 1255 | 1255 | 1260 | 1255 | 1250 | 1235 | 1220 | 1185 |
| | ON | ON | OFF | 1245 | 1245 | 1255 | 1255 | 1260 | 1255 | 1250 | 1235 | 1220 | 1185 |
| | ON | ON | ON | 1245 | 1245 | 1255 | 1255 | 1260 | 1255 | 1250 | 1235 | 1220 | 1185 |
| | **Maximum Clg Airflow[2]** | | | 1520 | 1485 | 1450 | 1415 | 1375 | 1335 | 1300 | 1265 | 1225 | 1190 |
| **CF Switches** | **SW3-3** | **SW3-2** | **SW3-1** | | | | | | | | | | |
| **Cont. Fan Default:** | OFF | OFF | OFF | 520 | 505 | 505 | 495 | 490 | See note 4 | | | | |
| **Continuous Fan Airflow (SW3)** | OFF | OFF | ON | 520 | 505 | 505 | 495 | 490 | See note 4 | | | | |
| | OFF | ON | OFF | 665 | 685 | 680 | 660 | 665 | See note 4 | | | | |
| | OFF | ON | ON | 885 | 895 | 905 | 900 | 900 | 895 | 885 | 875 | 860 | 845 |
| | ON | OFF | OFF | 885 | 895 | 905 | 900 | 900 | 895 | 885 | 875 | 860 | 845 |
| | ON | OFF | ON | 885 | 895 | 905 | 900 | 900 | 895 | 885 | 875 | 860 | 845 |
| | ON | ON | OFF | 885 | 895 | 905 | 900 | 900 | 895 | 885 | 875 | 860 | 845 |
| | ON | ON | ON | 885 | 895 | 905 | 900 | 900 | 895 | 885 | 875 | 860 | 845 |
| **Heating (SW1)** | **Maximum Heat Airflow[3]** | | | 1520 | 1485 | 1450 | 1415 | 1375 | 1335 | 1300 | 1265 | 1225 | 1190 |
| | **Intermediate Heat Airflow[3]** | | | 755 | 745 | 755 | 755 | 765 | See note 4 | | | | |
| | **Minimum Heat Airflow[3]** | | | 620 | 625 | 630 | 620 | 610 | See note 4 | | | | |
| **Unit Size: 0802120** | **Clg/CF Switch settings** | | | **External Static Pressure (ESP)** | | | | | | | | | |
| **Clg Switches** | SW2-3 | SW2-2 | SW2-1 | 0.1 | 0.2 | 0.3 | 0.4 | 0.5 | 0.6 | 0.7 | 0.8 | 0.9 | 1.0 |
| **Clg Default:** | OFF | OFF | OFF | 1745 | 1755 | 1755 | 1760 | 1755 | 1750 | 1745 | 1725 | 1705 | 1685 |
| **CF Switches** | **SW3-3** | **SW3-2** | **SW3-1** | | | | | | | | | | |
| **Low-Clg Default:** | OFF | OFF | OFF | 700 | 710 | 750 | 725 | 750 | See note 4 | | | | |
| **Cooling Airflow (SW2) Low-Cooling Airflow (SW3)** | OFF | OFF | ON | 700 | 710 | 750 | 725 | 750 | See note 4 | | | | |
| | OFF | ON | OFF | 830 | 860 | 870 | 890 | 960 | See note 4 | | | | |
| | OFF | ON | ON | 1045 | 1045 | 1060 | 1070 | 1070 | 1070 | 1095 | 1090 | 1080 | 1070 |
| | ON | OFF | OFF | 1215 | 1220 | 1245 | 1240 | 1235 | 1235 | 1225 | 1220 | 1235 | 1235 |
| | ON | OFF | ON | 1370 | 1370 | 1390 | 1390 | 1400 | 1395 | 1400 | 1390 | 1390 | 1385 |
| | ON | ON | OFF | 1745 | 1755 | 1755 | 1760 | 1755 | 1750 | 1745 | 1725 | 1705 | 1685 |
| | ON | ON | ON | 1745 | 1755 | 1755 | 1760 | 1755 | 1750 | 1745 | 1725 | 1705 | 1685 |
| | **Maximum Clg Airflow[2]** | | | 1920 | 1920 | 1945 | 1945 | 1945 | 1960 | 1950 | 1940 | 1915 | 1900 |
| **CF Switches** | **SW3-3** | **SW3-2** | **SW3-1** | | | | | | | | | | |
| **Cont. Fan Default:** | OFF | OFF | OFF | 700 | 710 | 750 | 725 | 750 | See note 4 | | | | |
| **Continuous Fan Airflow (SW3)** | OFF | OFF | ON | 700 | 710 | 750 | 725 | 750 | See note 4 | | | | |
| | OFF | ON | OFF | 830 | 860 | 870 | 890 | 960 | See note 4 | | | | |
| | OFF | ON | ON | 1045 | 1045 | 1060 | 1070 | 1070 | 1070 | 1095 | 1090 | 1080 | 1070 |
| | ON | OFF | OFF | 1215 | 1220 | 1245 | 1240 | 1235 | 1235 | 1225 | 1220 | 1235 | 1235 |
| | ON | OFF | ON | 1370 | 1370 | 1390 | 1390 | 1400 | 1395 | 1400 | 1390 | 1390 | 1385 |
| | ON | ON | OFF | 1370 | 1370 | 1390 | 1390 | 1400 | 1395 | 1400 | 1390 | 1390 | 1385 |
| | ON | ON | ON | 1370 | 1370 | 1390 | 1390 | 1400 | 1395 | 1400 | 1390 | 1390 | 1385 |
| **Heating (SW1)** | **Maximum Heat Airflow[3]** | | | 1340 | 1355 | 1370 | 1385 | 1380 | 1385 | 1400 | 1400 | 1385 | 1380 |
| | **Intermediate Heat Airflow[3]** | | | 780 | 810 | 835 | 840 | 845 | See note 4 | | | | |
| | **Minimum Heat Airflow[3]** | | | 595 | 595 | 600 | 595 | 605 | See note 4 | | | | |

## Cooling[4] and Heating Air Delivery - CFM (Bottom Return[5] With Filter) (Continued)

| (SW1-5 and SW4-3 set to OFF, except as indicated. See notes 1 and 2.) | | | | | | | | | | | | | |
|---|---|---|---|---|---|---|---|---|---|---|---|---|---|
| **Unit Size: 1002122** | **Clg/CF Switch settings** | | | **External Static Pressure (ESP)** | | | | | | | | | |
| **Clg Switches** | **SW2-3** | **SW2-2** | **SW2-1** | **0.1** | **0.2** | **0.3** | **0.4** | **0.5** | **0.6** | **0.7** | **0.8** | **0.9** | **1.0** |
| **Clg Default:** | OFF | OFF | OFF | 1820 | 1825 | 1840 | 1845 | 1840 | 1835 | 1825 | 1805 | 1780 | 1770 |
| **CF Switches** | **SW3-3** | **SW3-2** | **SW3-1** | | | | | | | | | | |
| **Low-Clg Default:** | OFF | OFF | OFF | 750 | 740 | 745 | 730 | 715 | See note 4 | | | | |
| **Cooling Airflow (SW2) Low-Cooling Airflow (SW3)** | OFF | OFF | ON | 750 | 740 | 745 | 730 | 715 | See note 4 | | | | |
| | OFF | ON | OFF | 900 | 900 | 915 | 910 | 905 | See note 4 | | | | |
| | OFF | ON | ON | 1070 | 1075 | 1095 | 1095 | 1090 | 1085 | 1095 | 1080 | 1065 | 1070 |
| | ON | OFF | OFF | 1280 | 1285 | 1305 | 1305 | 1310 | 1305 | 1295 | 1300 | 1290 | 1285 |
| | ON | OFF | ON | 1440 | 1445 | 1465 | 1465 | 1470 | 1485 | 1480 | 1485 | 1475 | 1460 |
| | ON | ON | OFF | 1820 | 1825 | 1840 | 1845 | 1840 | 1835 | 1825 | 1805 | 1780 | 1770 |
| | ON | ON | ON | 2135 | 2140 | 2140 | 2135 | 2140 | 2130 | 2115 | 2100 | 2070 | 2015 |
| | **Maximum Clg Airflow[2]** | | | 2160 | 2165 | 2175 | 2170 | 2160 | 2150 | 2135 | 2120 | 2065 | 2020 |
| **CF Switches** | **SW3-3** | **SW3-2** | **SW3-1** | | | | | | | | | | |
| **Cont. Fan Default:** | OFF | OFF | OFF | 750 | 740 | 745 | 730 | 715 | See note 4 | | | | |
| **Continuous Fan Airflow (SW3)** | OFF | OFF | ON | 750 | 740 | 745 | 730 | 715 | See note 4 | | | | |
| | OFF | ON | OFF | 900 | 900 | 915 | 910 | 905 | See note 4 | | | | |
| | OFF | ON | ON | 1070 | 1075 | 1095 | 1095 | 1090 | 1085 | 1095 | 1080 | 1065 | 1070 |
| | ON | OFF | OFF | 1280 | 1285 | 1305 | 1305 | 1310 | 1305 | 1295 | 1300 | 1290 | 1285 |
| | ON | OFF | ON | 1440 | 1445 | 1465 | 1465 | 1470 | 1485 | 1480 | 1485 | 1475 | 1460 |
| | ON | ON | OFF | 1440 | 1445 | 1465 | 1465 | 1470 | 1485 | 1480 | 1485 | 1475 | 1460 |
| | ON | ON | ON | 1440 | 1445 | 1465 | 1465 | 1470 | 1485 | 1480 | 1485 | 1475 | 1460 |
| **Heating (SW1)** | **Maximum Heat Airflow[3]** | | | 1570 | 1575 | 1595 | 1595 | 1600 | 1605 | 1600 | 1600 | 1590 | 1575 |
| | **Intermediate Heat Airflow[3]** | | | 950 | 955 | 965 | 975 | 970 | See note 4 | | | | |
| | **Minimum Heat Airflow[3]** | | | 755 | 745 | 750 | 735 | 720 | See note 4 | | | | |
| **Unit Size: 1202422** | **Clg/CF Switch settings** | | | **External Static Pressure (ESP)** | | | | | | | | | |
| **Clg Switches** | SW2-3 | SW2-2 | SW2-1 | 0.1 | 0.2 | 0.3 | 0.4 | 0.5 | 0.6 | 0.7 | 0.8 | 0.9 | 1.0 |
| **Clg Default:** | OFF | OFF | OFF | 1850 | 1855 | 1860 | 1855 | 1850 | 1830 | 1805 | 1775 | 1750 | 1730 |
| **CF Switches** | **SW3-3** | **SW3-2** | **SW3-1** | | | | | | | | | | |
| **Low-Clg Default:** | OFF | OFF | OFF | 930 | 925 | 915 | 900 | 885 | See note 4 | | | | |
| **Cooling Airflow (SW2) Low-Cooling Airflow (SW3)** | OFF | OFF | ON | 765 | 745 | 740 | 705 | 680 | See note 4 | | | | |
| | OFF | ON | OFF | 930 | 925 | 915 | 900 | 885 | See note 4 | | | | |
| | OFF | ON | ON | 1095 | 1100 | 1110 | 1105 | 1085 | See note 4 | | | | |
| | ON | OFF | OFF | 1265 | 1255 | 1265 | 1280 | 1275 | 1285 | 1270 | 1260 | 1250 | 1230 |
| | ON | OFF | ON | 1465 | 1455 | 1470 | 1465 | 1465 | 1470 | 1455 | 1450 | 1435 | 1415 |
| | ON | ON | OFF | 1850 | 1855 | 1860 | 1855 | 1850 | 1830 | 1805 | 1775 | 1750 | 1730 |
| | ON | ON | ON | 2200 | 2200 | 2200 | 2190 | 2185 | 2170 | 2145 | 2085 | 1990 | 1890 |
| | **Maximum Clg Airflow[2]** | | | 2200 | 2200 | 2200 | 2190 | 2185 | 2170 | 2145 | 2085 | 1990 | 1890 |
| **CF Switches** | **SW3-3** | **SW3-2** | **SW3-1** | | | | | | | | | | |
| **Cont. Fan Default:** | OFF | OFF | OFF | 930 | 925 | 915 | 900 | 885 | See note 4 | | | | |
| **Continuous Fan Airflow (SW3)** | OFF | OFF | ON | 765 | 745 | 740 | 705 | 680 | See note 4 | | | | |
| | OFF | ON | OFF | 930 | 925 | 915 | 900 | 885 | See note 4 | | | | |
| | OFF | ON | ON | 1095 | 1100 | 1110 | 1105 | 1085 | See note 4 | | | | |
| | ON | OFF | OFF | 1265 | 1255 | 1265 | 1280 | 1275 | 1285 | 1270 | 1260 | 1250 | 1230 |
| | ON | OFF | ON | 1465 | 1455 | 1470 | 1465 | 1465 | 1470 | 1455 | 1450 | 1435 | 1415 |
| | ON | ON | OFF | 1465 | 1455 | 1470 | 1465 | 1465 | 1470 | 1455 | 1450 | 1435 | 1415 |
| | ON | ON | ON | 1465 | 1455 | 1470 | 1465 | 1465 | 1470 | 1455 | 1450 | 1435 | 1415 |
| **Heating (SW1)** | **Maximum Heat Airflow[3]** | | | 1815 | 1820 | 1825 | 1820 | 1815 | 1795 | 1775 | 1745 | 1720 | 1700 |
| | **Intermediate Heat Airflow[3]** | | | 1095 | 1100 | 1110 | 1105 | 1085 | See note 4 | | | | |
| | **Minimum Heat Airflow[3]** | | | 905 | 900 | 890 | 875 | 855 | See note 4 | | | | |

See NOTES following table

## NOTES:

1. Nominal 350 CFM/ton cooling airflow is delivered with SW1-5 and SW4-3 set to OFF.
   Set SW1-5 to ON for nominal 400 CFM/ton (+15% airflow).
   Set SW4-3 to ON for nominal 325 CFM/ton (-7% airflow).
   Set both SW1-5 and SW4-3 to ON for nominal 370 CFM/ton (+7% airflow).
   This applies to Cooling and Low-Cooling airflow, but does not affect continuous fan airflow.

The above adjustments in airflow are subject to motor horsepower range/capacity.

2. Maximum cooling airflow is achieved when switches SW2-1, SW2-2, SW2-3 and SW1-5 are set to ON, and SW4-3 is set to OFF.
3. All heating CFM's are when low/medium heat rise adjustment switch (SW1-3) and comfort/efficiency adjustment switch (SW1-4) are both set to OFF.
4. Ductwork must be sized for high-heating CFM within the operational range of ESP. Operation within the blank areas of the chart is not recommended because high-heat operation will be above 1.0 ESP.
5. All airflow on 21" casing size furnaces are 5% less on side return only installations.
6. Return air above 1800 CFM on 24.5" casing sizes requires two sides, one side and bottom or bottom only, to allow sufficient airflow to the furnace.

| ACCESSORIES | | | | | | | | |
|---|---|---|---|---|---|---|---|---|
| **PART NUMBER** | **COMPONENT NAME** | **DESCRIPTION** | **0601714** | **0602120** | **0801714** | **0802120** | **1002122** | **1202422** |
| NAHB00101CT | EXTERNAL TRAP KIT | CONDENSATE TRAP | X | X | X | X | X | X |
| NAHA00110DA | DRAIN ACCESSORY | 1/2" CPVC to 3/4" PVC (10 PACK) | X | X | X | X | X | X |
| NAHA002CV | VENT TERMINATION KIT | 2" CONCENTRIC VENT | X | X | X | X | X | |
| NAHA001CV | | 3" CONCENTRIC VENT | X | X | X | X | X | X |
| NAHA00101VC | INTERNAL VENT KIT | THROUGH THE CABINET | X | X | X | X | X | X |
| NAHA00301VT | DIRECT VENT TERMINATION KIT | 2" BRACKET | X | X | X | X | X | |
| NAHA00401VT | | 3" BRACKET | X | X | X | X | X | X |
| NAHA00101CK | INLET AIR PIPE COUPLING | COUPLING FOR POLYPROPYLENE VENT SYSTEMS | X | X | X | X | X | X |
| NAHA00101HV | HORIZONTAL INSTALLATION KIT | TRAP GROMMET (direct Vent application only) | X | X | X | X | X | X |
| NAHA00101HH | FREEZE PROTECT KIT | CONDENSATE DRAIN LINE - TAPE | X | X | X | X | X | X |
| NAHA00201HH | CONDENSATE FREEZE PROTECT KIT | CONDENSATE TRAP WITH HEAT PAD | X | X | X | X | X | X |
| NAHA01101SB | FLOOR BASE KIT | COMBUSTIBLE FLOOR | X | X | X | X | X | X |
| AGAGC9NPS01B* | GAS CONVERSION KIT | NATURAL TO PROPANE | X | X | X | X | X | X |
| AGAGC9PNS01B* | | PROPANE TO NATURAL | X | X | X | X | X | X |
| 1188594† | GAS VALVE TOWER PORT ADAPTER KIT | ADAPTER FOR GAS VALVE | X | X | X | X | X | X |
| 325531-402† | WASHABLE FILTER (SINGLE PACK) | 16" x 25" x 3/4" FILTER | X | - | X | - | - | - |
| 325531-403† | | 20" x 25" x 3/4" FILTER | - | X | - | X | X | - |
| 325531-404† | | 24" x 25" x3/4" FILTER | - | - | - | - | - | X |
| FHG1625-2† | BOTTOM FILTER RACK (WITHOUT FILTER) | 16" x 25" RACK | X | - | X | - | - | - |
| FHG2025-2† | | 20" x 25" RACK | - | X | - | X | X | - |
| FHG2424-2† | | 24.5" x 24" RACK | - | - | - | - | - | X |
| NAHB00101CA | COIL ADAPTER KIT | WITH NO OFFSET | X | X | X | X | X | X |
| NAHB00201CA | | WITH SINGLE OFFSET | X | X | X | X | X | X |
| NAHB00301CA | | WITH DOUBLE OFFSET | X | X | X | X | X | X |
| NAHA01701RA | RETURN AIR KIT | 17-1/2" wide | X | - | X | - | - | - |
| NAHA02101RA | | 21" wide | - | X | - | X | X | - |
| NAHA02401RA | | 24-1/2" wide | - | - | - | - | - | X |
| SYST0101CW | ION™ CONTROL SYSTEM | COMMUNICATING SYSTEM CONTROL | X | X | X | X | X | X |
| NAHA00101MS | MOTOR SIMULATOR | ECM MOTOR SIMULATOR KIT | X | X | X | X | X | X |
| NAHA001NK | CONDENSATE NEUTRALIZER KIT | NEUTRALIZES CONDENSATE | X | X | X | X | X | X |

*. Factory authorized and field installed. Gas conversion kits are CSA recognized.
†. Order through FAST Part.
X = Accessory available

## ORIFICES

| Part Number | Gas Type | Orifice Size |
|---|---|---|
| 1185612 | Natural | 42 |
| 1176928 | Natural | 43 |
| 1185574 | Natural | 44 |
| 1177213 | Natural | 45 |

| Part Number | Gas Type | Orifice Size |
|---|---|---|
| 1183809 | Natural | 46 |
| 1185613 | Natural | 47 |
| 1185614 | Natural | 48 |

| Part Number | Gas Type | Orifice Size |
|---|---|---|
| 1184256 | Propane | 54 |
| 1185615 | Propane | 55 |
| 1185616 | Propane | 56 |
| 1185617 | Propane | 1.25 mm |
| 1185618 | Propane | 1.30 mm |

© 2020 Carrier. All rights reserved.
Edition Date: 08/20
**Catalog No: 440 65 4521 02**
A Carrier Company
Replaces: 440 65 4521 01
**Manufacturer reserves the right to change, at any time, specifications and designs without notice and without obligations.**