Comfortmaker®
Air Conditioning & Heating

# G8MVL

## SoftSound™ VS 80

## Product Specifications

# 80% Variable Speed, Two–Stage Heating Furnace

## EASIER TO SELL

- 80% AFUE
- Cabinet air leakage less than 2.0% at 1.0 in. W.C. and cabinet air leakage less than 1.4% at 0.5 in. W.C. when tested in accordance with ASHRAE standard 193
- Series 'B' approved for Twinning applications (0902116, 1002122, and 1352422) with accessory (order separately)
- Supports two–stage cooling units
- Observer® Communicating Control System
- Flame roll–out sensors standard
- Category I venting
- Blocked vent switch
- Dehumidification feature in cooling
- 24 VAC humidifier terminal
- Electronic air cleaner terminal
- Low NOx units are designed for California installations and meet 40 ng/J NOx emissions. Can be installed in air quality management districts with a 40 ng/J NOx emissions requirement.

## TOUGHER

- Variable speed ECM blower motor
- Adjustable heating blower OFF delay
- Factory set blower ON delay
- RPJ aluminized steel heat exchanger
- High temperature limit control prevents overheating
- Direct ignition with Silicon Nitride ignitor
- One piece prepainted steel cabinet

## QUIETER

- Two–stage heating operation
- Two–stage induced draft blower
- In–shot burners
- Insulated blower compartment

## EASIER TO INSTALL AND SERVICE

- 33–1/3" (847mm) high, for ease of installation
- Innovative knobs for easy door removal and secure attachment
- Factory shipped for natural gas, with propane gas conversion kits available
- Four position – upflow/downflow/horizontal (left/right) installation
- Three position vent elbow capability
- Through the casing flue pipe for counterflow applications
- Common venting with other Category I appliances
- Masonry chimney adapter available
- Self diagnostics
- Slide out blower assembly

## LIMITED WARRANTY *

- 10 year No Hassle Replacement™ limited warranty
- 20 year heat exchanger limited warranty
- 5 year parts limited warranty
  - With timely registration, an additional 5 year parts limited warranty

* For residential applications only, See warranty certificate for complete details and restrictions, including warranty coverage of other applications.

**TSTAT0201CW Recommended (sold separately)**

Illustrations and photographs are only representative. Some product models may vary.

**⚠ WARNING**

This furnace is not designed for use in mobile homes, trailers, or recreational vehicles. Such use could result in property damage and/or death.

AHRI CERTIFIED™ www.ahridirectory.org

Use of the AHRI Certified TM Mark indicates a manufacturer's participation in the program. For verification of certification for individual products, go to www.ahridirectory.org .

Certified System™ ISO 9001 QMI-SAI Global

DESIGN CERTIFIED®

| Model Number | Input (MBTUH) | Efficiency AFUE | Cooling Capacity CFM range @ .5 in. w.c. (125 Pa) | Dimensions H x W x D Inches (Millimeters) | Shipping Wt. Lbs (Kg) |
|---|---|---|---|---|---|
| G8MVL0451412 | 44,000 | 80% | 410 – 1175 | 33–1/3 x 14–3/16 x 29 (847 x 360 x 737) | 107 (49) |
| G8MVL0701716 | 66,000 | 80% | 805 – 1685 | 33–1/3 x 17–1/2 x 29 (847 x 445 x 737) | 126 (57) |
| G8MVL0902116 | 88,000 | 80% | 725 – 1770 | 33–1/3 x 21 x 29 (847 x 533 x 737) | 146 (66) |
| G8MVL1102122 | 110,000 | 80% | 700 – 2230 | 33–1/3 x 21 x 29 (847 x 533 x 737) | 152 (69) |
| G8MVL1352422 | 132,000 | 80% | 920 – 2290 | 33–1/3 x 24–1/2 x 29 (847 x 622 x 737) | 163 (74) |

## MODEL NUMBER IDENTIFICATION GUIDE

| DIGIT POSITION | 1 | 2 | 3 | 4 | 5 | 6,7,8 | 9,10 | 11,12 | 13 | 14 |
|---|---|---|---|---|---|---|---|---|---|---|
| | G | 8 | M | V | L | 045 | 14 | 12 | B | 2 |

- G = Mainline; N = Entry — **EFFICIENCY**
- 8 = 80% AFUE — **POSITION**
- M = Multiposition — **TYPE**
- V = Variable Speed Blower Motor – ECM; X = ECM Blower Motor; S = Single–stage; T = Two–stage — **FEATURE**
- N = Standard; L = Low NOx — **HEAT INPUT**
- 045 = 44,000 BTU/hr; 070 = 66,000 BTU/hr; 090 = 88,000 BTU/hr; 110 = 110,000 BTU/hr; 135 = 132,000 BTU/hr — **CABINET WIDTH**
- 14 = 14–3/16”; 17 = 17–1/2”; 21 = 21”; 24 = 24–1/2” — **NOMINAL MAXIMUM COOLING AIRFLOW @ .5 IN. W.C.**
- 08 = 800 CFM; 12 = 1200 CFM; 14 = 1400 CFM; 16 = 1600 CFM; 20 = 2000 CFM; 22 = 2200 CFM
- SALES (MAJOR) REVISION DIGIT
- ENGINEERING (MINOR) REVISION DIGIT

ECM–Electronically Commutated Motor

## ACCESSORIES PART NUMBER IDENTIFICATION GUIDE

| DIGIT POSITION | 1 | 2 | 3 | 4 | 5, 6, 7 | 8, 9 | 10, 11 |
|---|---|---|---|---|---|---|---|
| | N | A | H | A | 001 | 01 | DH |

- N = Non–Branded — **BRANDING**
- A = Accessory — **PRODUCT GROUP**
- H = Heating — **KIT USAGE**
- A = Original; B = 2nd Generation — **MAJOR SERIES**
- Product Identifier Number
- Package Quantity
- Type of Kit (Example: DH = Draft Hood – Chimney Adapter)

**For California Residents:**
For installation in SCAQMD only: This furnace does not meet the SCAQMD Rule 1111 14 ng/J NOx emission limit, and thus is subject to a mitigation fee of up to $450. This furnace is not eligible for the Clean Air Furnace Rebate Program: www.CleanAirFurnaceRebate.com

| PHYSICAL DATA | | | | | | | |
|---|---|---|---|---|---|---|---|
| **NATURAL GAS** | | | **0451412** | **0701716** | **0902116** | **1102122** | **1352422** |
| **OUTPUT CAPACITY BTUH* (Nonweatherized ICS) †** | **Upflow** | High | 35,000 | 53,000 | 71,000 | 89,000 | 107,000 |
| | | Low | 23,000 | 35,000 | 47,000 | 59,000 | 70,000 |
| | **Downflow/ Horizontal** | High | 34,000 | 51,000 | 68,000 | 85,000 | 102,000 |
| | | Low | 23,000 | 35,000 | 47,000 | 59,000 | 70,000 |
| **INPUT BTUH*** | **Upflow** | High | 44,000 | 66,000 | 88,000 | 110,000 | 132,000 |
| | | Low | 29,000 | 43,500 | 58,000 | 72,500 | 87,000 |
| | **Downflow/ Horizontal** | High | 42,000 | 63,000 | 84,000 | 105,000 | 126,000 |
| | | Low | 29,000 | 43,500 | 58,000 | 72,500 | 87,000 |
| **TRANSFORMER (24 volt)** | | | 40 VA | | | | |
| **CERTIFIED TEMP RISE RANGE – °F (°C)** | | High | 30–60 (17–33) | 25–55 (14–31) | 30–60 (17–33) | 30–60 (17–33) | 40–70 (22–39) |
| | | Low | 20–50 (11–28) | 15–45 (8–25) | 25–55 (14–31) | 20–50 (11–28) | 25–55 (14–30) |
| **CERTIFIED EXT STATIC PRESSURE (in. w.c.)** | **Heating/Cooling** | | 0.10/0.50 | 0.12/0.50 | 0.15/0.50 | 0.20/0.50 | 0.20/.050 |
| **AIRFLOW CFM‡** | **Heating–High/Low** | | 820/725 | 1570/1045 | 1265/1030 | 1555/1295 | 1865/1640 |
| | **Cooling** | | 1175 | 1685 | 1770 | 2230 | 2290 |
| **AFUE%*** | **Nonweatherized ICS** | | 80.0 | 80.0 | 80.0 | 80.0 | 80.0 |
| **LIMIT CONTROL** | | | SPST | | | | |
| **HEATING BLOWER CONTROL** | | | Solid-State Time Operation | | | | |
| **BURNERS (Monoport)** | | | 2 | 3 | 4 | 5 | 6 |
| **GAS CONNECTION SIZE** | | | 1/2 inch NPT | | | | |
| **GAS VALVE (Redundant) Manufacturer** | | | White-Rodgers™ | | | | |
| **Minimum Inlet Pressure (in. w.c.)** | | | 4.5 (Natural Gas) | | | | |
| **Maximum Inlet Pressure (in. w.c.)** | | | 13.6 (Natural Gas) | | | | |
| **IGNITION DEVICE** | | | Hot Surface | | | | |
| **FACTORY–INSTALLED ORIFICE** | | | Size 43 | | | | |

* Gas input ratings are certified for elevations to 2000 ft. (610 M). In USA, for elevations above 2000 ft. (610 M), reduce ratings 4 percent for each 1000 ft. (305 M) above sea level. Refer to National Fuel Gas Code NFPA 54/ANSI Z223.1−2012 Table F.4 or furnace Installation Instructions.

† Capacity in accordance with U.S. Government DOE test procedures.

‡ Airflow shown is for bottom only return−air supply in comfort mode (as shipped). For air delivery above 1800 CFM, see Air Delivery Table for other options. A filter is required for each return-air supply.

ICS — Isolated Combustion System

| ELECTRICAL DATA | | | | | | | | |
|---|---|---|---|---|---|---|---|---|
| **G8MVL** | **VOLTS HERTZ PHASE** | **OPERATING VOLTAGE RANGE** | | **MAXIMUM UNIT AMPS** | **UNIT AMPACITY #** | **MAXIMUM WIRE LENGTH FT (M)‡** | **MAXIMUM FUSE OR CKT BKR AMPS† **** | **MIN. WIRE SIZE** |
| | | **Maximum*** | **Minimum*** | | | | | |
| 0451412 | 115-60-1 | 127 | 104 | 8.0 | 10.8 | 34 (10.4) | 15 | 14 |
| 0701716 | 115-60-1 | 127 | 104 | 11.3 | 15.0 | 24 (7.3) | 15 | 14 |
| 0902116 | 115-60-1 | 127 | 104 | 10.2 | 13.4 | 27 (8.2) | 15 | 14 |
| 1102122 | 115-60-1 | 127 | 104 | 13.0 | 16.8 | 34 (10.4) | 20 | 12 |
| 1352422 | 115-60-1 | 127 | 104 | 13.0 | 16.8 | 34 (10.4) | 20 | 12 |

* Permissible limits of the voltage range at which unit operates satisfactorily.

† Time−delay type is recommended.

‡ Length shown is as measured one way along wire path between unit and service panel for maximum 2 percent voltage drop.

** Time−delay type is recommended

## UNIT DIMENSIONS

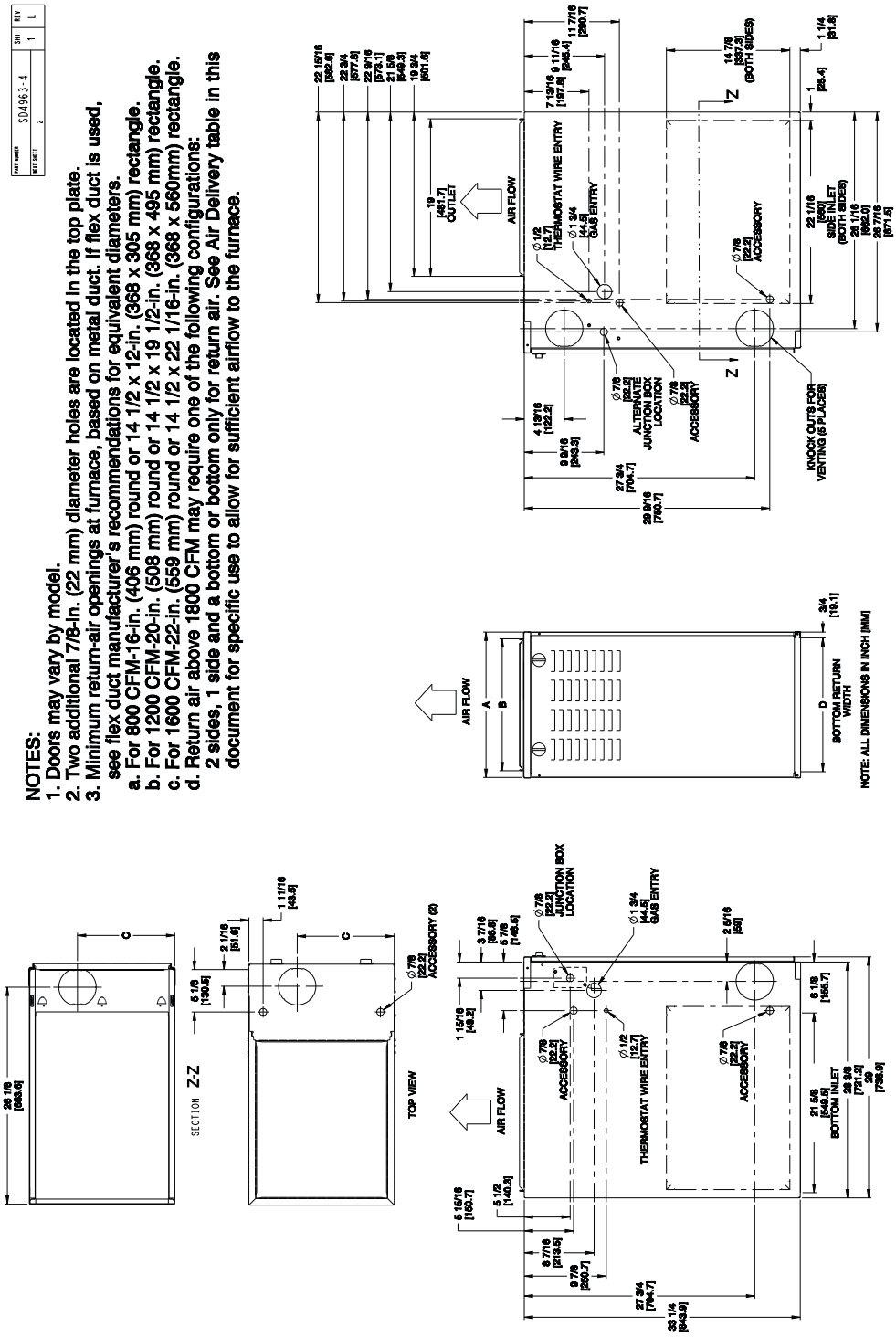


| G8MVL | A<br>CABINET WIDTH in (mm) | B<br>OUTLET WIDTH in (mm) | C<br>TOP AND BOTTOM FLUE COLLAR in (mm) | D<br>BOTTOM INLET WIDTH in (mm) | FLUE COLLAR* in (mm) | SHIPPING WT. LB (KG) |
|---|---|---|---|---|---|---|
| 0451412 | 14–3/16 (360) | 12–9/16 (319) | 9–5/16 (237) | 12–11/16 (322) | 4 (102) | 107 (49) |
| 0701716 | 17–1/2 (445) | 15–7/8 (403) | 11–9/16 (294) | 16–1/8 (410) | 4 (102) | 126 (57) |
| 0902116 | 21 (533) | 19–3/8 (492) | 13–5/16 (338) | 19–1/2 (495) | 4 (102) | 146 (66) |
| 1102122 | 21 (533) | 19–3/8 (492) | 13–5/16 (338) | 19–1/2 (495) | 4 (102) | 152 (69) |
| 1352422 | 24–1/2 (622) | 22–7/8 (581) | 15–1/16 (383) | 23 (584) | 4 (102) | 163 (74) |

* 5 inch or 6 inch (127 or 152 mm) vent connector may be required in some cases.

## DOWNFLOW VENT CONFIGURATIONS

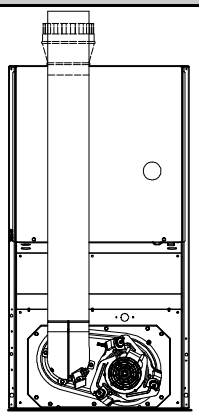

SEE NOTES: 1,2,4,5,7,8,9 A02061

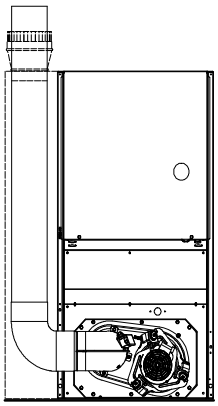

SEE NOTES: 1,2,4,5,6,7,8,9 A02062

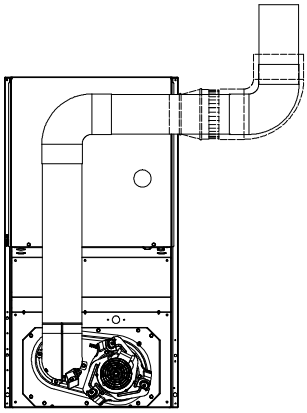

SEE NOTES: 1,2,3,4,5,7,8,9 A02063

## DOWNFLOW CONTINUTED

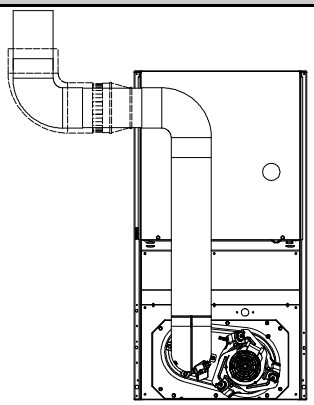

SEE NOTES:1,2,3,4,5,7,8,9 A02060

## UPFLOW VENT CONFIGURATIONS

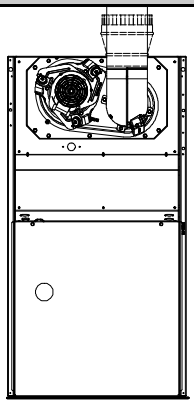

SEE NOTES: 1,2,4,7,8,9 A02058

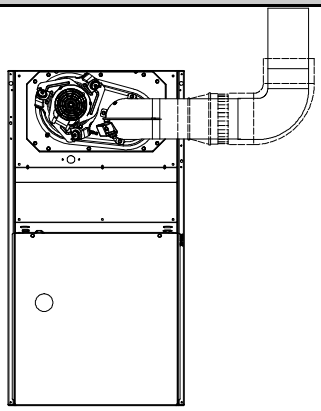

SEE NOTES: 1,2,3,4,7,8,9 A02059

## HORIZONTAL RIGHT VENT CONFIGURATIONS

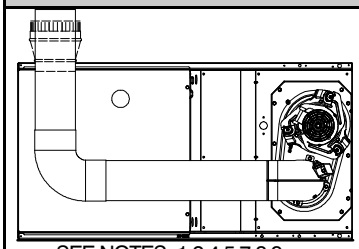

SEE NOTES: 1,2,4,5,7,8,9 A02070

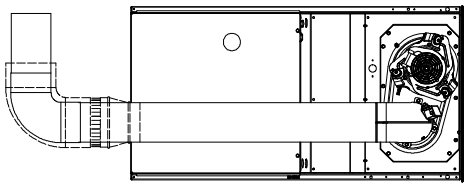

SEE NOTES: 1,2,4,5,7,8,9 A02068

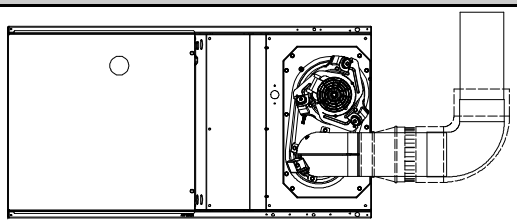

SEE NOTES: 1,2,4,7,8,9 A02069

## HORIZONTAL LEFT VENT CONFIGURATIONS

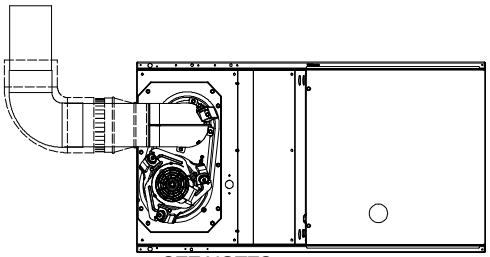

SEE NOTES: 1,2,4,7,8,9 A02064

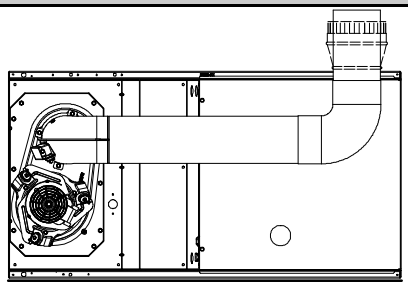

SEE NOTES: 1,2,4,5,7,8,9 A02065

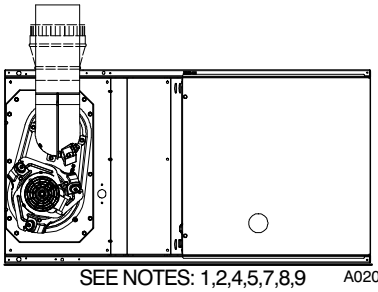

SEE NOTES: 1,2,4,5,7,8,9 A02066

## HORIZONTAL LEFT VENT CONFIGURATIONS

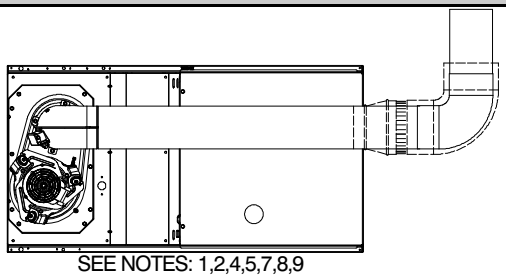

SEE NOTES: 1,2,4,5,7,8,9 A02067

## Venting Notes

1. For common vent, vent connector sizing and vent material: United States–use the NFGC.
2. Immediately increase to 5 inch (102 mm) or 6 inch (152 mm) vent connector outside furnace casing when 5 inch (127 mm) vent connector is required, refer to Note 1 above.
3. Side outlet vent for upflow and downflow installations must use Type B vent immediately after exiting the furnace, expect when Downflow Vent Guard Kit is used in the downflow position.
4. Type–B vent where required, refer to Note 1 above.
5. A 4 inch(102 mm) single–wall (26 ga. min.) vent must be used inside furnace casing and when the NAHB00301VC Downflow Vent Guard Kit is used external to the furnace.
6. Accessory Downflow Vent Guard Kit is required in downflow installations with lower vent configuration.
7. Chimney Adapter Kit may be required for exterior masonry chimney applications. Refer to Chimney Adapter Kit for sizing and complete application details.
8. Secure vent connector to furnace elbow with (2) corrosion–resistant sheet metal screws, spaced approximately 180° apart.
9. Secure all other single wall vent connector joints with (3) corrosion resistant screws spaced approximately 120° apart. Secure Type–B vent connectors per vent connector manufacturer's recommendations.

## MINIMUM CLEARANCES TO COMBUSTIBLE MATERIALS FOR ALL UNITS

This forced air furnace is equipped for use with natural gas at altitudes 0 – 10,000 ft (0 – 3,050m).

An accessory kit, supplied by the manufacturer, shall be used to convert to propane gas use or may be required for some natural gas applications.

This furnace is for indoor installation in a building constructed on site.

The furnace may be installed on combustible flooring in alcove or closet at minimum clearance as indicated by the diagram from combustible material.

This furnace may be used with a Type B–1 Vent and may be vented in common with other gas fired appliances.

This furnace is approved for UPFLOW, DOWNFLOW, and HORIZONTAL installations.

Downflow Positions:

† Installation on non–combustible floors only.
For Installation on combustible flooring only when installed on special base or coil assembly.

∅ 18 inch front clearance required for alcove.

* Indicate supply or return sides when furnace is in the horizontal position. Line contact only permissible between lines formed by intersections of the Top and two Sides of the furnace jacket, and building joists, studs or framing.

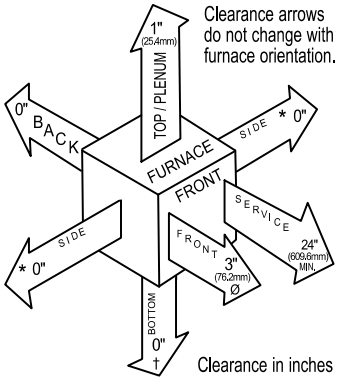


**Vent Clearance to combustibles:**
For Single Wall vents 6 inches (6 po).
For Type B-1 vent type 1 inch (1 po).

## BLOWER PERFORMANCE DATA

| MODEL SIZE | G8MVL0451412 | G8MVL0701716 | G8MVL0902116 | G8MVL1102122 | G8MVL1352422 |
|---|---|---|---|---|---|
| DIRECT–DRIVE MOTOR Hp (PWM) | 1/2 | 3/4 | 3/4 | 1 | 1 |
| MOTOR FULL LOAD AMPS | 6.8 | 10.1 | 8.4 | 10.9 | 10.9 |
| RPM (Nominal) | 1200 | | | | |
| BLOWER WHEEL DIAMETER X WIDTHS – in(mm) | 10 x 6 (254 x 152) | 11 x 8 (279 x 203 | 10 x 10 (254 x 254) | 11 x 11 (279 x 279) | 11 x 11 (279 x 279) |

## AIR DELIVERY – CFM (with filter)*

COOLING AND HEATING AIR DELIVERY – CFM (Bottom Return with Filter)

(SW1–5 and SW4–3 set to OFF. See notes 1 and 2.)

| Unit Size | Selectable AC Switch Settiings | | | External Static Pressure (ESP) | | | | | | | | | |
|---|---|---|---|---|---|---|---|---|---|---|---|---|---|
| | SW2–8 | SW2–7 | SW2–6 | 0.1 | 0.2 | 0.3 | 0.4 | 0.5 | 0.6 | 0.7 | 0.8 | 0.9 | 1 |
| 045–12 | OFF | OFF | OFF | 1190 | 1140 | 1100 | 1065 | 1020 | 985 | 905 | 800 | 665 | 525 |
| | OFF | OFF | ON | 620 | 560 | 520 | 455 | 410 | 355 | 305 | 255 | See note 4 | |
| | OFF | ON | OFF | 795 | 755 | 705 | 670 | 615 | 585 | 530 | 490 | 440 | 405 |
| | OFF | ON | ON | 1020 | 955 | 930 | 890 | 840 | 805 | 755 | 715 | 645 | 490 |
| | ON | OFF | OFF | 1190 | 1140 | 1100 | 1065 | 1020 | 985 | 905 | 800 | 665 | 525 |
| | ON | OFF | ON | 1455 | 1390 | 1325 | 1255 | 1175 | 1085 | 1000 | 880 | 755 | 575 |
| | ON | ON | OFF | 1455 | 1390 | 1325 | 1255 | 1175 | 1085 | 1000 | 880 | 755 | 575 |
| | ON | ON | ON | 1455 | 1390 | 1325 | 1255 | 1175 | 1085 | 1000 | 880 | 755 | 575 |
| | | | | | | | | | | | | | |
| | Selectable CF Switch Settings | | | External Static Pressure (ESP) | | | | | | | | | |
| | SW2–5 | SW2–4 | SW2–3 | 0.1 | 0.2 | 0.3 | 0.4 | 0.5 | 0.6 | 0.7 | 0.8 | 0.9 | 1 |
| | OFF | OFF | OFF | 620 | 560 | 520 | 455 | 410 | 355 | 305 | 255 | See note 4 | |
| | OFF | OFF | ON | 620 | 560 | 520 | 455 | 410 | 355 | 305 | 255 | See note 4 | |
| | OFF | ON | OFF | 795 | 755 | 705 | 670 | 615 | 585 | 530 | 490 | 440 | 405 |
| | OFF | ON | ON | 1020 | 955 | 930 | 890 | 840 | 805 | 755 | 715 | 645 | 490 |
| | ON | OFF | OFF | 1190 | 1140 | 1100 | 1065 | 1020 | 985 | 905 | 800 | 665 | 525 |
| | ON | OFF | ON | 1455 | 1390 | 1325 | 1255 | 1175 | 1085 | 1000 | 880 | 755 | 575 |
| | ON | ON | OFF | 1455 | 1390 | 1325 | 1255 | 1175 | 1085 | 1000 | 880 | 755 | 575 |
| | ON | ON | ON | 1455 | 1390 | 1325 | 1255 | 1175 | 1085 | 1000 | 880 | 755 | 575 |
| | | | | | | | | | | | | | |
| | Maximum Clg Airflow[2] | | | 1455 | 1390 | 1325 | 1255 | 1175 | 1085 | 1000 | 880 | 755 | 575 |
| | High Heat Airflow[3] | | | 915 | 860 | 825 | 790 | 735 | 700 | 650 | 610 | 550 | 450 |
| | Low Heat Airflow[3] | | | 780 | 730 | 685 | 635 | 585 | 545 | 495 | 450 | 400 | 370 |

| Unit Size | Selectable AC Switch Settings | | | External Static Pressure (ESP) | | | | | | | | | |
|---|---|---|---|---|---|---|---|---|---|---|---|---|---|
| | SW2–8 | SW2–7 | SW2–6 | 0.1 | 0.2 | 0.3 | 0.4 | 0.5 | 0.6 | 0.7 | 0.8 | 0.9 | 1 |
| 070–16 | OFF | OFF | OFF | 1615 | 1570 | 1530 | 1490 | 1450 | 1405 | 1365 | 1325 | 1280 | 1210 |
| | OFF | OFF | ON | 640 | See note 4 | | | | | | | | |
| | OFF | ON | OFF | 840 | 775 | 700 | 640 | See note 4 | | | | | |
| | OFF | ON | ON | 1045 | 980 | 920 | 860 | 805 | 750 | 690 | 640 | See note 4 | |
| | ON | OFF | OFF | 1220 | 1175 | 1120 | 1075 | 1025 | 970 | 925 | 875 | 820 | 775 |
| | ON | OFF | ON | 1390 | 1335 | 1290 | 1245 | 1200 | 1155 | 1105 | 1055 | 1015 | 970 |
| | ON | ON | OFF | 1615 | 1570 | 1530 | 1490 | 1450 | 1405 | 1365 | 1325 | 1280 | 1210 |
| | ON | ON | ON | 1890 | 1850 | 1810 | 1750 | 1685 | 1615 | 1545 | 1475 | 1395 | 1275 |
| | | | | | | | | | | | | | |
| | Selectable CF Switch Settings | | | External Static Pressure (ESP) | | | | | | | | | |
| | SW2–5 | SW2–4 | SW2–3 | 0.1 | 0.2 | 0.3 | 0.4 | 0.5 | 0.6 | 0.7 | 0.8 | 0.9 | 1 |
| | OFF | OFF | OFF | 640 | See note 4 | | | | | | | | |
| | OFF | OFF | ON | 640 | See note 4 | | | | | | | | |
| | OFF | ON | OFF | 840 | 775 | 700 | 640 | See note 4 | | | | | |
| | OFF | ON | ON | 1045 | 980 | 920 | 860 | 805 | 750 | 690 | 640 | See note 4 | |
| | ON | OFF | OFF | 1220 | 1175 | 1120 | 1075 | 1025 | 970 | 925 | 875 | 820 | 775 |
| | ON | OFF | ON | 1390 | 1335 | 1290 | 1245 | 1200 | 1155 | 1105 | 1055 | 1015 | 970 |
| | ON | ON | OFF | 1615 | 1570 | 1530 | 1490 | 1450 | 1405 | 1365 | 1325 | 1280 | 1210 |
| | ON | ON | ON | 1890 | 1850 | 1810 | 1750 | 1685 | 1615 | 1545 | 1475 | 1395 | 1275 |
| | | | | | | | | | | | | | |
| | Maximum Clg Airflow[2] | | | 1890 | 1850 | 1810 | 1750 | 1685 | 1615 | 1545 | 1475 | 1395 | 1275 |
| | High Heat Airflow[3] | | | 1540 | 1490 | 1450 | 1410 | 1365 | 1320 | 1275 | 1235 | 1190 | 1140 |
| | Low Heat Airflow[3] | | | 1370 | 1320 | 1275 | 1225 | 1180 | 1135 | 1085 | 1040 | 995 | 950 |

## Air Delivery – CFM (with filter)* (continued)

| Unit Size | Selectable AC Switch Settings | | | External Static Pressure (ESP) | | | | | | | | | |
|---|---|---|---|---|---|---|---|---|---|---|---|---|---|
| | SW2–8 | SW2–7 | SW2–6 | 0.1 | 0.2 | 0.3 | 0.4 | 0.5 | 0.6 | 0.7 | 0.8 | 0.9 | 1 |
| 090–16 | OFF | OFF | OFF | 1625 | 1580 | 1535 | 1490 | 1445 | 1390 | 1325 | 1215 | 1070 | 910 |
| | OFF | OFF | ON | 555 | See note 4 | | | | | | | | |
| | OFF | ON | OFF | 845 | 770 | 670 | 595 | See note 4 | | | | | |
| | OFF | ON | ON | 1010 | 950 | 880 | 790 | 725 | 670 | 580 | See note 4 | | |
| | ON | OFF | OFF | 1210 | 1155 | 1105 | 1035 | 970 | 910 | 850 | 800 | 730 | 660 |
| | ON | OFF | ON | 1405 | 1360 | 1305 | 1255 | 1185 | 1130 | 1070 | 1015 | 960 | 875 |
| | ON | ON | OFF | 1625 | 1580 | 1535 | 1490 | 1445 | 1390 | 1325 | 1215 | 1070 | 910 |
| | ON | ON | ON | 2095 | 2010 | 1935 | 1855 | 1770 | 1675 | 1540 | 1300 | 1120 | 940 |
| | | | | | | | | | | | | | |
| | Selectable CF Switch Settings | | | External Static Pressure (ESP) | | | | | | | | | |
| | SW2–5 | SW2–4 | SW2–3 | 0.1 | 0.2 | 0.3 | 0.4 | 0.5 | 0.6 | 0.7 | 0.8 | 0.9 | 1 |
| | OFF | OFF | OFF | 555 | See note 4 | | | | | | | | |
| | OFF | OFF | ON | 555 | See note 4 | | | | | | | | |
| | OFF | ON | OFF | 845 | 770 | 670 | 595 | See note 4 | | | | | |
| | OFF | ON | ON | 1010 | 950 | 880 | 790 | 725 | 670 | 580 | See note 4 | | |
| | ON | OFF | OFF | 1210 | 1155 | 1105 | 1035 | 970 | 910 | 850 | 800 | 730 | 660 |
| | ON | OFF | ON | 1405 | 1360 | 1305 | 1255 | 1185 | 1130 | 1070 | 1015 | 960 | 875 |
| | ON | ON | OFF | 1625 | 1580 | 1535 | 1490 | 1445 | 1390 | 1325 | 1215 | 1070 | 910 |
| | ON | ON | ON | 2095 | 2010 | 1935 | 1855 | 1770 | 1675 | 1540 | 1300 | 1120 | 940 |
| | | | | | | | | | | | | | |
| | Maximum Clg Airflow[2] | | | 2095 | 2010 | 1935 | 1855 | 1770 | 1675 | 1540 | 1300 | 1120 | 940 |
| | High Heat Airflow[3] | | | 1735 | 1685 | 1630 | 1580 | 1520 | 1455 | 1375 | 1235 | 1085 | 915 |
| | Low Heat Airflow[3] | | | 1230 | 1175 | 1125 | 1055 | 995 | 930 | 875 | 820 | 755 | 690 |

| Unit Size | Selectable AC Switch Settings | | | External Static Pressure (ESP) | | | | | | | | | |
|---|---|---|---|---|---|---|---|---|---|---|---|---|---|
| | SW2–8 | SW2–7 | SW2–6 | 0.1 | 0.2 | 0.3 | 0.4 | 0.5 | 0.6 | 0.7 | 0.8 | 0.9 | 1 |
| 110–22 | OFF | OFF | OFF | 2055 | 2000 | 1950 | 1900 | 1840 | 1790 | 1740 | 1675 | 1625 | 1565 |
| | OFF | OFF | ON | 855 | 755 | See note 4 | | | | | | | |
| | OFF | ON | OFF | 1060 | 985 | 875 | 800 | 700 | See note 4 | | | | |
| | OFF | ON | ON | 1250 | 1180 | 1095 | 1025 | 925 | 860 | 775 | 715 | See note 4 | |
| | ON | OFF | OFF | 1445 | 1380 | 1320 | 1235 | 1175 | 1100 | 1035 | 955 | 900 | 825 |
| | ON | OFF | ON | 1685 | 1630 | 1560 | 1505 | 1445 | 1375 | 1320 | 1265 | 1195 | 1140 |
| | ON | ON | OFF | 2055 | 2000 | 1950 | 1900 | 1840 | 1790 | 1740 | 1675 | 1625 | 1565 |
| | ON | ON | ON | 2465 | 2415 | 2365 | 2305 | 2230 | 2140 | 2045 | 1925 | 1805 | 1655 |
| | | | | | | | | | | | | | |
| | Selectable CF Switch Settings | | | External Static Pressure (ESP) | | | | | | | | | |
| | SW2–5 | SW2–4 | SW2–3 | 0.1 | 0.2 | 0.3 | 0.4 | 0.5 | 0.6 | 0.7 | 0.8 | 0.9 | 1 |
| | OFF | OFF | OFF | 855 | 755 | See note 4 | | | | | | | |
| | OFF | OFF | ON | 655 | 550 | See note 4 | | | | | | | |
| | OFF | ON | OFF | 855 | 755 | See note 4 | | | | | | | |
| | OFF | ON | ON | 1060 | 985 | 875 | 800 | 700 | See note 4 | | | | |
| | ON | OFF | OFF | 1250 | 1180 | 1095 | 1025 | 925 | 860 | 775 | 715 | See note 4 | |
| | ON | OFF | ON | 1445 | 1380 | 1320 | 1235 | 1175 | 1100 | 1035 | 955 | 900 | 825 |
| | ON | ON | OFF | 1685 | 1630 | 1560 | 1505 | 1445 | 1375 | 1320 | 1265 | 1195 | 1140 |
| | ON | ON | ON | 2055 | 2000 | 1950 | 1900 | 1840 | 1790 | 1740 | 1675 | 1625 | 1565 |
| | | | | | | | | | | | | | |
| | Maximum Clg Airflow[2] | | | 2465 | 2415 | 2365 | 2305 | 2230 | 2140 | 2045 | 1925 | 1805 | 1655 |
| | High Heat Airflow[3] | | | 2105 | 2055 | 2005 | 1955 | 1895 | 1850 | 1795 | 1735 | 1665 | 1580 |
| | Low Heat Airflow[3] | | | 1740 | 1685 | 1620 | 1560 | 1505 | 1440 | 1385 | 1325 | 1260 | 1205 |

## Air Delivery – CFM (with filter)* (continued)

| Unit Size | Selectable AC Switch Settings | | | External Static Pressure (ESP) | | | | | | | | | |
|---|---|---|---|---|---|---|---|---|---|---|---|---|---|
| | SW2–8 | SW2–7 | SW2–6 | 0.1 | 0.2 | 0.3 | 0.4 | 0.5 | 0.6 | 0.7 | 0.8 | 0.9 | 1 |
| 135–22 | OFF | OFF | OFF | 2040 | 1985 | 1930 | 1880 | 1830 | 1775 | 1715 | 1660 | 1595 | 1510 |
| | OFF | OFF | ON | 850 | 740 | See note 4 | | | | | | | |
| | OFF | ON | OFF | 1040 | 960 | 865 | 755 | See note 4 | | | | | |
| | OFF | ON | ON | 1245 | 1170 | 1080 | 1005 | 920 | 835 | 750 | See note 4 | | |
| | ON | OFF | OFF | 1450 | 1385 | 1305 | 1245 | 1180 | 1085 | 1015 | 935 | 880 | 805 |
| | ON | OFF | ON | 1670 | 1605 | 1540 | 1480 | 1425 | 1350 | 1280 | 1220 | 1135 | 1070 |
| | ON | ON | OFF | 2040 | 1985 | 1930 | 1880 | 1830 | 1775 | 1715 | 1660 | 1595 | 1510 |
| | ON | ON | ON | 2520 | 2455 | 2405 | 2350 | 2290 | 2195 | 2090 | 1965 | 1815 | 1615 |
| | | | | | | | | | | | | | |
| | Selectable CF Switch Settings | | | External Static Pressure (ESP) | | | | | | | | | |
| | SW2–5 | SW2–4 | SW2–3 | 0.1 | 0.2 | 0.3 | 0.4 | 0.5 | 0.6 | 0.7 | 0.8 | 0.9 | 1 |
| | OFF | OFF | OFF | 850 | 740 | See note 4 | | | | | | | |
| | OFF | OFF | ON | 640 | See note 4 | | | | | | | | |
| | OFF | ON | OFF | 850 | 740 | See note 4 | | | | | | | |
| | OFF | ON | ON | 1040 | 960 | 865 | 755 | See note 4 | | | | | |
| | ON | OFF | OFF | 1245 | 1170 | 1080 | 1005 | 920 | 835 | 750 | See note 4 | | |
| | ON | OFF | ON | 1450 | 1385 | 1305 | 1245 | 1180 | 1085 | 1015 | 935 | 880 | 805 |
| | ON | ON | OFF | 1670 | 1605 | 1540 | 1480 | 1425 | 1350 | 1280 | 1220 | 1135 | 1070 |
| | ON | ON | ON | 2040 | 1985 | 1930 | 1880 | 1830 | 1775 | 1715 | 1660 | 1595 | 1510 |
| | | | | | | | | | | | | | |
| | Maximum Clg Airflow[2] | | | 2520 | 2455 | 2405 | 2350 | 2290 | 2195 | 2090 | 1965 | 1815 | 1615 |
| | High Heat Airflow[3] | | | 2260 | 2205 | 2150 | 2100 | 2045 | 1985 | 1925 | 1855 | 1745 | 1600 |
| | Low Heat Airflow[3] | | | 2005 | 1950 | 1895 | 1845 | 1790 | 1735 | 1675 | 1620 | 1550 | 1475 |

1. Nominal 350 CFM/ton cooling airflow is delivered with SW1–5 and SW4–3 set to OFF
   Set SW1–5 to ON for nominal 400CFM/ton (+15% airflow)
   Set SW4–3 to ON for nominal 325 CFM/ton (–7% airflow)
   Set both SW1–5 and SW4–3 to ON for nominal 370CFM/ton (+7% airflow)
   ***The above adjustments in airflow are subject to motor horsepower range/capacity***
2. Maximum cooling airflow is achieved when switches SW2–6, SW2–7, SW2–8 and SW1–5 are set to ON, and SW4–3 is set to OFF
3. All heating CFM's are when low heat rise adjustment switch SW1–3 and comfort/efficiency adjustment switch SW1–4 are both set to OFF
4. Ductwork must be sized for high–heating CFM within the operational range of ESP. Operation within the blank areas of the chart is not recommended because high–heat operation will be above 1.0 ESP
5. All airflows on 21" (533 mm) casing size furnaces are 5% less on side–return only installations
6. Side returns for 24.5" (622 mm) casing sizes require two sides, or a side and bottom to allow sufficient airflow at the return of the furnace
7. Airflows over 1800 CFM require bottom return, two–side return, or bottom and side return or excessive watt draw may result. A minimum filter size of 20x25" (508 x 635 mm) is required

| ACCESSORIES | | | | | | |
|---|---|---|---|---|---|---|
| PART NUMBER | DESCRIPTION | 0451412B | 0701716B | 0902116B | 1102122B | 1352422B |
| NAHB00501FF | External Bottom Filter Rack, 14 inch (14 x 25 inch washable filter included) | X | | | | |
| NAHB00601FF | External Bottom Filter Rack, 17 inch (16 x 25 inch washable filter included) | | X | | | |
| NAHB00701FF | External Bottom Filter Rack, 21 inch (20 x 25 inch washable filter included) | | | X | X | |
| NAHB00801FF | External Bottom Filter Rack, 24 inch (24 x 25 inch washable filter included) | | | | | X |
| NAHA00506FB† | Washable filter, 1 inch 16 X 25 (6 pack) | X | X | | | |
| NAHA00706FB | Washable filter, 1 inch 24 X 25 (6 pack) | | | X | X | X |
| NAHA01101SB | Combustible Floor Base (Not required when evaporator coil case is used for downflow) | X | X | X | X | X |
| NAHB00301VC | Downflow Vent Guard (Not required when vent is routed through cabinet) | X | X | X | X | X |
| NAHA00401DH | Chimney Adapter Kit 4–in. vent | X | X | X | X | |
| NAHA00301DH | Chimney Adapter Kit 5–in. vent | | | | | X |
| NAHB01001LP* | Natural–to–Propane Conversion Kit | X | X | X | X | X |
| NAHB01001NG* | Propane–to–Natural Conversion Kit | X | X | X | X | X |
| NAHA00201HL | High Altitude Kit | X | X | X | X | X |
| NAHA00801WK | Twinning Kit for two furnaces of same model and series | | | X | X | X |
| TSTAT0201CW | Observer Control System – Self Configuring Communicating Control | X | X | X | X | X |

X Accessory available
† Suitable for 17 inch external bottom filter rack.
* Factory authorized and field installed. Gas conversion kits are CSA recognized.

Copyright 2018 International Comfort Products
Lewisburg, Tennessee 37091 USA
www.GoComfortmaker.com



Specifications subject to change without notice.