INSTALLATION INSTRUCTIONS

Variable Speed Motor, Two–Stage
35” Tall, High Efficiency Condensing Gas Furnace
(F/G)9MVE 0401410, 0401712, 0601412, 0601714, 0801716 ’A3’ Series
(F/G)9MVE 0802120, 1002120, 1202422 ’A3 or A4’ Series

These instructions must be read and understood completely before attempting installation.

Safety Labeling and Signal Words

DANGER, WARNING, CAUTION, and NOTE
The signal words **DANGER, WARNING**, **CAUTION**, and **NOTE** are used to identify levels of hazard seriousness. The signal word **DANGER** is only used on product labels to signify an immediate hazard. The signal words **WARNING**, **CAUTION**, and **NOTE** will be used on product labels and throughout this manual and other manual that may apply to the product.

DANGER – Immediate hazards which will result in severe personal injury or death.

WARNING – Hazards or unsafe practices which could result in severe personal injury or death.

CAUTION – Hazards or unsafe practices which may result in minor personal injury or product or property damage.

NOTE – Used to highlight suggestions which will result in enhanced installation, reliability, or operation.

Signal Words in Manuals

The signal word **WARNING** is used throughout this manual in the following manner:

⚠ WARNING

The signal word **CAUTION** is used throughout this manual in the following manner:

⚠ CAUTION

Signal Words on Product Labeling

Signal words are used in combination with colors and/or pictures or product labels.

⚠ Safety–alert symbol
When you see this symbol on the unit and in instructions or manuals, be alert to the potential for personal injury.

TABLE OF CONTENTS

SAFETY CONSIDERATIONS 3
INTRODUCTION 4
CODES AND STANDARDS 4
ELECTROSTATIC DISCHARGE PRECAUTIONS PROCEDURE 5
DIMENSIONS 6
LOCATION 7
LOCATION RELATIVE TO COOLING EQUIPMENT 8
AIR FOR COMBUSTION AND VENTILATION 9
CONDENSATE TRAP 12
INSTALLATION 20
UPFLOW INSTALLATION 20
DOWNFLOW INSTALLATION 21
HORIZONTAL INSTALLATION 21
AIR DUCTS 28
GAS PIPING 28
ELECTRICAL CONNECTIONS 30
J–BOX INSTALLATION 31
VENTING 35
SPECIAL VENTING REQUIREMENTS
FOR INSTALLATIONS IN CANADA 35
DIRECT VENT / 2–PIPE SYSTEM 41
VENTILATED COMBUSTION AIR 41
TERMINATION REQUIREMENTS
FOR THE PROVINCES OF ALBERTA AND SASKATCHEWAN 41
INSTALLING THE VENT TERMINATION 50
MAXIMUM EQUIVALENT VENT LENGTH 55
MAXIMUM ALLOWABLE EXPOSED
VENT LENGTH TABLES – TWO–STAGE 57

Use of the AHRI Certified TM Mark indicates a manufacturer’s participation in the program. For verification of certification for individual products, go to www.ahridirectory.org .

INSTALLER: Affix these instructions on or adjacent to the furnace.
CONSUMER: Retain these instructions for future reference.

Portions of the text and tables are reprinted from NFPA 54 /ANSI Z223.1©, with permission of National Fire Protection Association, Quincy, MA 02269 and American Gas Association, Washington, DC 20001. This reprinted material is not the complete and official position of the NFPA or ANSI, on the referenced subject, which is represented only by the standard in its entirety.

Printed in U.S.A. **440 01 4401 06** 2/21/2017

Required Notice for Massachusetts Installations

Important

The Commonwealth of Massachusetts requires compliance with regulation 248 CMR as follows:

5.08: **Modifications to NFPA–54, Chapter 10**

2) Revise 10.8.3 by adding the following additional requirements:

(a) For all side wall horizontally vented gas fueled equipment installed in every dwelling, building or structure used in whole or in part for residential purposes, including those owned or operated by the Commonwealth and where the side wall exhaust vent termination is less than seven (7) feet above finished grade in the area of the venting, including but not limited to decks and porches, the following requirements shall be satisfied:

1. INSTALLATION OF CARBON MONOXIDE DETECTORS. At the time of installation of the side wall horizontal vented gas fueled equipment, the installing plumber or gasfitter shall observe that a hard wired carbon monoxide detector with an alarm and battery back–up is installed on the floor level where the gas equipment is to be installed. in addition, the installing plumber or gasfitter shall observe that a battery operated or hard wired carbon monoxide detector with an alarm is installed on each additional level of the dwelling, building or structure served by the side wall horizontal vented gas fueled equipment. It shall be the responsibility of the property owner to secure the services of qualified license professionals for the installation of hard wired carbon monoxide detectors.

   a. In the event that the side wall horizontally vented gas fueled equipment is installed in a crawl space or an attic, the hard wired carbon monoxide detector with alarm and battery back–up may be installed on the next adjacent floor level.

   b. In the event that the requirements of this subdivision can not be met at the time of completion of installation, the owner shall have a period of thirty (30) days to comply with the above requirement; provided, however, that during said thirty (30) day period, a battery operated carbon monoxide detector with an alarm shall be installed.

2. APPROVED CARBON MONOXIDE DETECTORS. Each carbon monoxide detector as required in accordance with the above provisions shall comply with NFPA 720 and be ANSI/UL 2034 listed and IAS certified.

3. SIGNAGE. A metal or plastic identification plate shall be permanently mounted to the exterior of the building at a minimum height of eight (8) feet above grade directly in line with the exhaust vent terminal for the horizontally vented gas fueled heating appliance or equipment. The sign shall read, in print size no less than one–half (1/2) inch in size, "**GAS VENT DIRECTLY BELOW. KEEP CLEAR OF ALL OBSTRUCTIONS"**.

4. INSPECTION. The state of local gas inspector of the side wall horizontally vented gas fueled equipment shall not approve the installation unless, upon inspection, the inspector observes carbon monoxide detectors and signage installed in accordance with the provisions of 248 CMR 5.08(2)(a) 1 through 4.

(b) EXEMPTIONS: The following equipment is exempt from 248 CMR 5.08(2)(a) 1 through 4:

1. The equipment listed in Chapter 10 entitled "Equipment Not Required To Be Vented" in the most current edition of NFPA 54 as adopted by the Board; and

2. Product Approved side wall horizontally vented gas fueled equipment installed in a room or structure separate from the dwelling, building or structure used in whole or in part for residential purposes.

(c) MANUFACTURER REQUIREMENTS – GAS EQUIPMENT VENTING SYSTEM PROVIDED. When the manufacturer of Product Approved side wall horizontally vented gas equipment provides a venting system design or venting system components with the equipment, the instructions provided by the manufacturer for installation of the equipment and the venting system shall include:

1. Detailed instructions for the installation of the venting system design or the venting system components; and

2. A complete parts list for the venting system design or venting system.

(d) MANUFACTURER REQUIREMENTS – GAS EQUIPMENT VENTING SYSTEM NOT PROVIDED. When the manufacturer of a Product Approved side wall horizontally vented gas fueled equipment does not provide the parts for venting the flue gases, but identifies "special venting systems", the following requirements shall be satisfied by the manufacturer:

1. The referenced "special venting system" instructions shall be included with the appliance or equipment installation instructions; and

2. The "special venting systems" shall be Product Approved by the Board, and the instructions for that system shall include a parts list and detailed installation instructions.

(e) A copy of all installation instructions for all Product Approved side wall horizontally vented gas fueled equipment, all venting instructions, all parts lists for venting instructions, and/or all venting design instructions shall remain with the appliance or equipment at the completion of the installation.

For questions regarding these requirements, please contact the Commonwealth of Massachusetts Board of State Examiners of Plumbers and Gas Fitters, 239 Causeway Street, Boston, MA 02114. 617–727–9952

Safety Considerations

⚠ WARNING

FIRE, EXPLOSION, ELECTRICAL SHOCK, AND CARBON MONOXIDE POISONING HAZARD

Failure to follow this warning could result in dangerous operation, personal injury, death, or property damage.

Improper installation, adjustment, alteration, service, maintenance, or use can cause carbon monoxide poisoning, explosion, fire, electrical shock, or other conditions which may cause personal injury or property damage. Consult a qualified service agency, local gas supplier, or your distributor or branch for information or assistance. The qualified service agency must use only factory−authorized and listed kits or accessories when modifying this product.

⚠ WARNING

FIRE HAZARD

Failure to follow this warning could result in personal injury, death, or property damage.

Solvents, cements, and primers are combustible. Keep away from heat, sparks and open flame. Use only in well−ventilated areas. Avoid breathing in vapor or allowing contact with skin or eyes.

⚠ CAUTION

FURNACE RELIABILITY HAZARD

Failure to follow this caution may result in unit component damage.

Application of this furnace should be indoors with special attention given to vent sizing and material, gas input rate, air temperature rise, unit leveling, and unit sizing.

Improper installation, adjustment, alteration, service, maintenance, or use can cause explosion, fire, electrical shock, or other conditions which may cause personal injury or property damage. Consult a qualified service agency, local gas supplier, or your distributor or branch for information or assistance. The qualified installer or agency must use only factory−authorized and listed kits or accessories when modifying this product. Refer to the individual instructions packaged with the kits or accessories when installing.

Installing and servicing heating equipment can be hazardous due to gas and electrical components. **Only trained and qualified personnel should install, repair, or service heating equipment.** Untrained personnel can perform basic maintenance functions such as cleaning and replacing air filters. All other operations must be performed by trained service personnel. When working on heating equipment, observe precautions in literature, on tags, and on labels attached to or shipped with furnace and other safety precautions that may apply.

These instructions cover minimum requirements and conform to existing national standards and safety codes. In some instances, these instructions exceed certain local codes and ordinances, especially those that may not have kept up with changing residential construction practices. We require these instructions as a minimum for a safe installation.

Follow all safety codes. Wear safety glasses, protective clothing, and work gloves. Have a fire extinguisher available. Read these instructions thoroughly and follow all warnings or cautions included in literature and attached to the unit.

⚠ CAUTION

CUT HAZARD

Failure to follow this caution may result in personal injury.

Sheet metal parts may have sharp edges or burrs. Use care and wear appropriate protective clothing, safety glasses and gloves when handling parts, and servicing furnaces.

This is the safety−alert symbol ⚠. When you see this symbol on the furnace and in instructions or manuals, be alert to the potential for personal injury.

Understand the signal words **DANGER**, **WARNING**, and **CAUTION**. These words are used with the safety−alert symbol. **DANGER** identifies the most serious hazards which **will** result in severe personal injury or death. **WARNING** signifies a hazard which **could** result in personal injury or death. **CAUTION** is used to identify hazards which **may** result in minor personal injury or product and property damage. **NOTE** and **NOTICE** are used to highlight suggestions which will result in enhanced installation, reliability, or operation.

1. Use only with type of gas approved for this furnace. Refer to the furnace rating plate.
2. Install this furnace only in a location and position as specified in the “Location” section of these instructions.
3. Provide adequate combustion and ventilation air to the furnace space as specified in “Air for Combustion and Ventilation” section.
4. Combustion products must be discharged outdoors. Connect this furnace to an approved vent system only, as specified in the “Venting” section of these instructions.
5. Never test for gas leaks with an open flame. Use a commercially available soap solution made specifically for the detection of leaks to check all connections, as specified in the “Gas Piping” section.
6. Always install furnace to operate within the furnace’s intended temperature−rise range with a duct system which has an external static pressure within the allowable range, as specified in the “Start−Up, Adjustments, and Safety Check” section. See furnace rating plate.
7. When a furnace is installed so that supply ducts carry air circulated by the furnace to areas outside the space containing the furnace, the return air shall also be handled by duct(s) sealed to the furnace casing and terminating outside the space containing the furnace. See “Air Ducts” section.
8. A gas−fired furnace for installation in a residential garage must be installed as specified in the warning box in the “Location” section. (See **Figure 4**)
9. The furnace may be used for construction heat provided that the furnace installation and operation complies with the first CAUTION in the LOCATION section on page 7 of these instructions.
10. These Multipoise Gas−Fired Furnaces are CSA design−certified for use with natural and propane gases (see furnace rating plate) and for installation in alcoves, attics, basements, closets, utility rooms, crawlspaces, and garages. The furnace is factory−shipped for use with natural gas. A CSA (A.G.A. and C.G.A.) listed accessory gas conversion kit is required to convert furnace for use with propane gas.
11. See **Table 1** for required clearances to combustible construction.
12. Maintain a 1−in. (25 mm) clearance from combustible materials to supply air ductwork for a distance of 36−in. (914 mm) horizontally from the furnace. See the current

edition of the NFPA 90B or local code for further requirements.

Table 1	Minimum Clearances to Combustible Materials for All Units
POSITION	CLEARANCE In(mm)
REAR	0
FRONT (Combustion air openings in furnace and in structure)	1 (25)
Required for service	*24 (610)
All Sides of Supply Plenum	*1 (25)
Sides	0
Vent	0
Top of Furnace	1 (25)

* Consult local building codes

13. These furnaces SHALL NOT be installed directly on carpeting, combustible tile, or any other combustible material other than wood flooring. In downflow installations, factory accessory floor base MUST be used when installed on combustible materials and wood flooring. Special base is not required when this furnace is installed on manufacturer's Coil Assembly or when Coil Box is used. See **Table 1** for clearance to combustible construction information.

NOTICE

IMPORTANT INSTALLATION AND START–UP PROCEDURES

Failure to follow this procedure may result in a nuisance smoke or odor complaint.

The manifold pressure, gas rate by meter clocking, temperature rise and operation must be checked after installation. Minor smoke and odor may be present temporarily after start–up from the manufacturing process. Some occupants are more sensitive to this minor smoke and odor. It is recommended that doors and windows be open during the first heat cycle.

Introduction

The 4–way multipoise Category IV condensing furnace is CSA design–certified as a direct vent (2–pipe) or non–direct vent (1–pipe) furnace. (See **Figure 3**) The furnace is factory–shipped for use with natural gas. The furnace can be converted in the field for use with propane gas when a factory–supplied conversion kit is used. Refer to the furnace rating plate for conversion kit information.

This furnace is not approved for installation in mobile homes, recreational vehicles, or outdoors.

This furnace is designed for minimum continuous return–air temperature of 60°F (15°C) db or intermittent operation down to 55°F (15°C) db such as when used with a night setback thermostat. Return–air temperature must not exceed 80°F (27°C) db. Failure to follow these return–air temperature limits may affect reliability of heat exchangers, motors, and controls. (See **Figure 1**)

The furnace should be sized to provide 100 percent of the design heating load requirement plus any margin that occurs because of furnace model size capacity increments. None of the furnace model sizes can be used if the heating load is 20,000 BTU or lower. Use Air Conditioning Contractors of America (Manual J and S); American Society of Heating, Refrigerating, and Air–Conditioning Engineers; or other approved engineering method to calculate heating load estimates and select the furnace. Excessive oversizing of the furnace may cause the furnace and/or vent to fail prematurely, customer discomfort and/or vent freezing.

Failure to follow these guidelines is considered faulty installation and/or misapplication of the furnace; and resulting failure, damage, or repairs may impact warranty coverage.

For accessory installation details, refer to the applicable instruction literature.

NOTE: Remove all shipping materials, parts assemblies and literature before operating the furnace.

Figure 1 Freeze Protection and Return Air Temperature

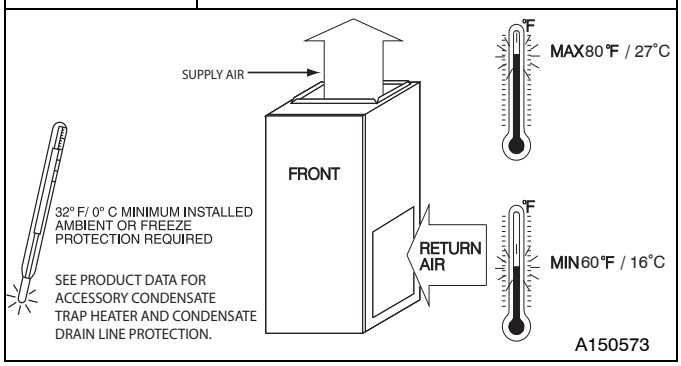

Codes and Standards

Follow all national and local codes and standards in addition to these instructions. The installation must comply with regulations of the serving gas supplier, local building, heating, plumbing, and other codes. In absence of local codes, the installation must comply with the national codes listed below and all authorities having jurisdiction.

In the United States and Canada, follow all codes and standards for the following:

Safety

- US: Current edition of National Fuel Gas Code (NFGC) NFPA 54/ANSI Z223.1 and the Installation Standards, Warm Air Heating and Air Conditioning Systems ANSI/NFPA 90B
- CANADA: Current edition of National Standard of Canada, Natural Gas and Propane Installation Code (NSCNGPIC) CAN/CSA B149.1

General Installation

- US: Current edition of NFGC and the NFPA 90B. For copies, contact the National Fire Protection Association Inc., Batterymarch Park, Quincy, MA 02269; or for only the NFGC contact the American Gas Association, 400 N. Capitol, N.W., Washington DC 20001.
- CANADA: Current edition of NSCNGPIC. For a copy, contact Standard Sales, CSA International, 178 Rexdale Boulevard, Etobicoke (Toronto), Ontario, M9W 1R3, Canada.

Combustion and Ventilation Air

- US: Section 9.3 of the current edition of NFPA54/ANSI Z223.1, Air for Combustion and Ventilation
- CANADA: Part 8 of the current edition of CAN/CSA B149.1, Venting Systems and Air Supply for Appliances.

Duct Systems

- US and CANADA: Current edition of Air Conditioning Contractors Association (ACCA) Manual D, Sheet Metal and Air Conditioning Contractors National Association (SMACNA), or American Society of Heating, Refrigeration, and Air Conditioning Engineers (ASHRAE).

Acoustical Lining and Fibrous Glass Duct

- US and CANADA: Current edition of SMACNA, NFPA 90B as tested by UL Standard 181 for Class I Rigid Air Ducts

Gas Piping and Gas Pipe Pressure Testing

- U.S.A.: Current edition of NFPA 54/ANSI Z223.1, NFGC; Chapters 5, 6, 7, and 8 and national plumbing codes.
- CANADA: Current edition of CAN/CSA–B149.1, Parts 4, 5, 6 and 9.

In the state of Massachusetts:

- This product must be installed by a licensed plumber or gas fitter.
- When flexible connectors are used, the maximum length shall not exceed 36–in. (914 mm).
- When lever type gas shutoffs are used they shall be T–handle type.
- The use of copper tubing for gas piping is not approved by the state of Massachusetts.

Electrical Connections

- U.S.A.: Current edition of National Electrical Code (NEC) NFPA 70
- CANADA: Current edition of Canadian Electrical Code CSA C22.1

Condensate Drain Connection

- US: Current edition of National Standard Plumbing Code, Section 8.7.
- Canada: Current edition of National Plumbing Code of Canada in Canada.

Electrostatic Discharge (ESD) Precautions Procedure

⚠ CAUTION

FURNACE RELIABILITY HAZARD

Failure to follow this caution may result in unit component damage.

Electrostatic discharge can affect electronic components. Take precautions during furnace installation and servicing to protect the furnace electronic control. Precautions will prevent electrostatic discharges from personnel and hand tools which are held during the procedure. These precautions will help to avoid exposing the control to electrostatic discharge by putting the furnace, the control, and the person at the same electrostatic potential.

1. Disconnect all power to the furnace. Multiple disconnects may be required. DO NOT TOUCH THE CONTROL OR ANY WIRE CONNECTED TO THE CONTROL PRIOR TO DISCHARGING YOUR BODY'S ELECTROSTATIC CHARGE TO GROUND.
2. Firmly touch the clean, unpainted, metal surface of the furnace chassis which is close to the control. Tools held in a person's hand during grounding will be satisfactorily discharged.
3. After touching the chassis, you may proceed to service the control or connecting wires as long as you do nothing to recharge your body with static electricity (for example; DO NOT move or shuffle your feet, do not touch ungrounded objects, etc.).
4. If you touch ungrounded objects (and recharge your body with static electricity), firmly touch a clean, unpainted metal surface of the furnace again before touching control or wires.
5. Use this procedure for installed and uninstalled (ungrounded) furnaces.
6. Before removing a new control from its container, discharge your body's electrostatic charge to ground to protect the control from damage. If the control is to be installed in a furnace, follow items 1 through 4 before bringing the control or yourself in contact with the furnace. Put all used and new controls into containers before touching ungrounded objects.
7. An ESD service kit (available from commercial sources) may also be used to prevent ESD damage.

Accessories

See Specification Sheets for a list of accessories for this product.

Table 2	Loose Parts Bag Contents
QUANTITY	**DESCRIPTION (Provided in Loose Parts Bag)**
1	Outlet Restrictor Plate – see **NOTE** (Provided with 40K BTUH furnace only)
1	Air Intake Pipe Flange
1	Vent Pipe Flange
2	Pipe Flange Gaskets
10	Sharp Tip Screws (Vent and Inlet Flanges)
1	Vent Pipe Coupling
2	Vent Pipe Coupling Clamps
1	Pressure Switch Tube
1	Rubber Drain Elbow
4	Drain Elbow Clamps
1	1/2"CPVC to 3/4" PVC Pipe Adapter
1	Gas Line Grommet
1	Gas Line Knockout Plug
1	Junction Box Cover
1	Junction Box Base
1	Green Ground Screw
3	Blunt Tip Screws (Junction Box)
1	Thermostat Wire Grommet
Provided separately in furnace	
1	Drain Extension Tube – "Z" Pipe

NOTE: The 40K model is the only furnace that receives the outlet restrictor in loose parts bag. See Maximum Equivalent Vent Length Table for usage.

Figure 2 Dimensions

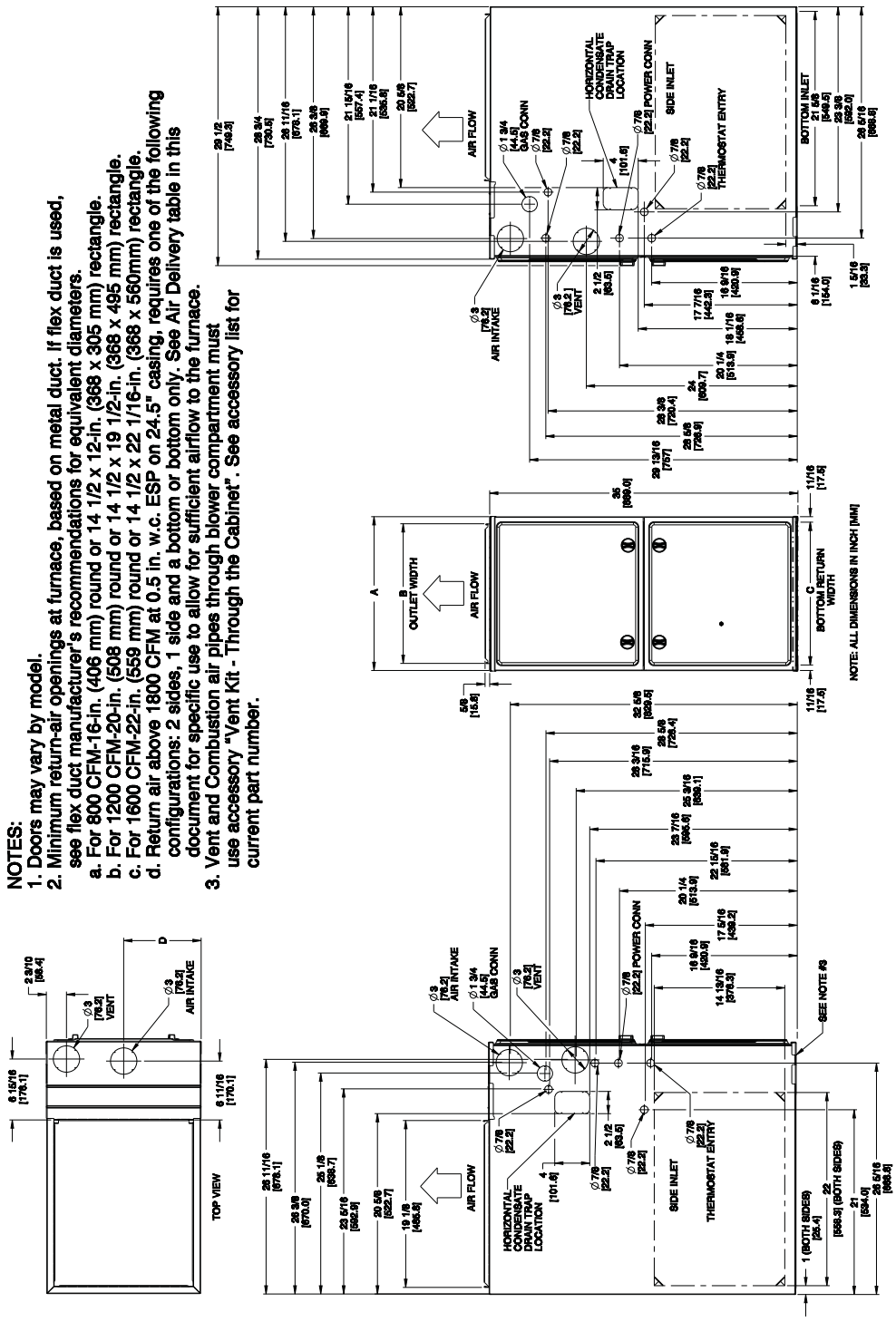

SD5060–4 Rev H

(F/G)9MVE FURNACE SIZE	A CABINET WIDTH	B OUTLET WIDTH	C BOTTOM INLET WIDTH	D AIR INTAKE	SHIP WT. LB (KG)
0401410	14–3/16 (361)	12–1/2 (319)	12–9/16 (322)	7–1/8 (181)	121 (54)
0401712	17–1/2 (445)	15–7/8 (403)	16 (406)	8–3/4 (222)	131 (59)
0601412	14–3/16 (361)	12–1/2 (319)	12–9/16 (322)	7–1/8 (181)	132 (60)
0601714	17–1/2 (445)	15–7/8 (403)	16 (406)	8–3/4 (222)	142 (63)
0801716	17–1/2 (445)	15–7/8 (403)	16 (406)	8–3/4 (222)	152 (68)
0802120	21 (533)	19–3/8 (492)	19–1/2 (495)	10–1/2 (267)	156 (71)
1002120	21 (533)	19–3/8 (492)	19–1/2 (495)	10–1/2 (267)	166 (75)
1202422	24–1/2 (622)	22–7/8 (581)	23 (584)	12–1/4 (311)	190 (86)

Location

⚠ CAUTION

PERSONAL INJURY AND/OR PROPERTY DAMAGE HAZARD

Improper use or installation of this furnace may result in premature furnace component failure. This gas furnace may be used for heating buildings under construction provided that:

−The furnace is permanently installed with all electrical wiring, piping, venting and ducting installed according to these installation instructions. A return air duct is provided, sealed to the furnace casing, and terminated outside the space containing the furnace. This prevents a negative pressure condition as created by the circulating air blower, causing a flame rollout and/or drawing combustion products into the structure.

−The furnace is controlled by a thermostat. It may not be “hot wired” to provide heat continuously to the structure without thermostatic control.

−Clean outside air is provided for combustion. This is to minimize the corrosive effects of adhesives, sealers and other construction materials. It also prevents the entrainment of drywall dust into combustion air, which can cause fouling and plugging of furnace components.

−The temperature of the return air to the furnace is maintained between 55°F (13°C) and 80°F (27°C), with no evening setback or shutdown. The use of the furnace while the structure is under construction is deemed to be intermittent operation per our installation instructions.

−The air temperature rise is within the rated rise range on the furnace rating plate, and the gas input rate has been set to the nameplate value.

−The filters used to clean the circulating air during the construction process must be either changed or thoroughly cleaned prior to occupancy.

−The furnace, ductwork and filters are cleaned as necessary to remove drywall dust and construction debris from all HVAC system components after construction is completed.

−Verify proper furnace operating conditions including ignition, gas input rate, air temperature rise, and venting according to these installation instructions.

General

These furnaces are shipped with materials to assist in proper furnace installation. These materials are shipped in the main blower compartment.

See **Table 2** for loose parts bag contents.

This furnace must:

- be installed so the electrical components are protected from water.
- not be installed directly on any combustible material other than wood flooring (refer to SAFETY CONSIDERATIONS).
- be located close to the chimney or vent and attached to an air distribution system. Refer to Air Ducts section.
- be provided ample space for servicing and cleaning. Always comply with minimum fire protection clearances shown in **Table 1** or on the furnace clearance to combustible construction label.

⚠ WARNING

CARBON MONOXIDE POISONING / COMPONENT DAMAGE HAZARD

Failure to follow this warning could result in personal injury or death and unit component damage.

Corrosive or contaminated air may cause failure of parts containing flue gas, which could leak into the living space. Air for combustion must not be contaminated by halogen compounds, which include fluoride, chloride, bromide, and iodide. These elements can corrode heat exchangers and shorten furnace life. Air contaminants are found in aerosol sprays, detergents, bleaches, cleaning solvents, salts, air fresheners, and other household products. Do not install furnace in a corrosive or contaminated atmosphere. Make sure all combustion and circulating air requirements are met, in addition to all local codes and ordinances.

The following types of furnace installations may require OUTDOOR AIR for combustion due to chemical exposures:

- Commercial buildings
- Buildings with indoor pools
- Laundry rooms
- Hobby or craft rooms, and
- Chemical storage areas

If air is exposed to the following substances, it should not be used for combustion air, and outdoor air may be required for combustion:

- Permanent wave solutions
- Chlorinated waxes and cleaners
- Chlorine based swimming pool chemicals
- Water softening chemicals
- De−icing salts or chemicals
- Carbon tetrachloride
- Halogen type refrigerants
- Cleaning solvents (such as perchloroethylene)
- Printing inks, paint removers, varnishes, etc.
- Hydrochloric acid
- Cements and glues
- Antistatic fabric softeners for clothes dryers
- Masonry acid washing materials

All fuel−burning equipment must be supplied with air for fuel combustion. Sufficient air must be provided to avoid negative pressure in the equipment room or space. A positive seal must be made between the furnace cabinet and the return−air duct to prevent pulling air from the burner area.

Figure 3 **Multipoise Orientations**

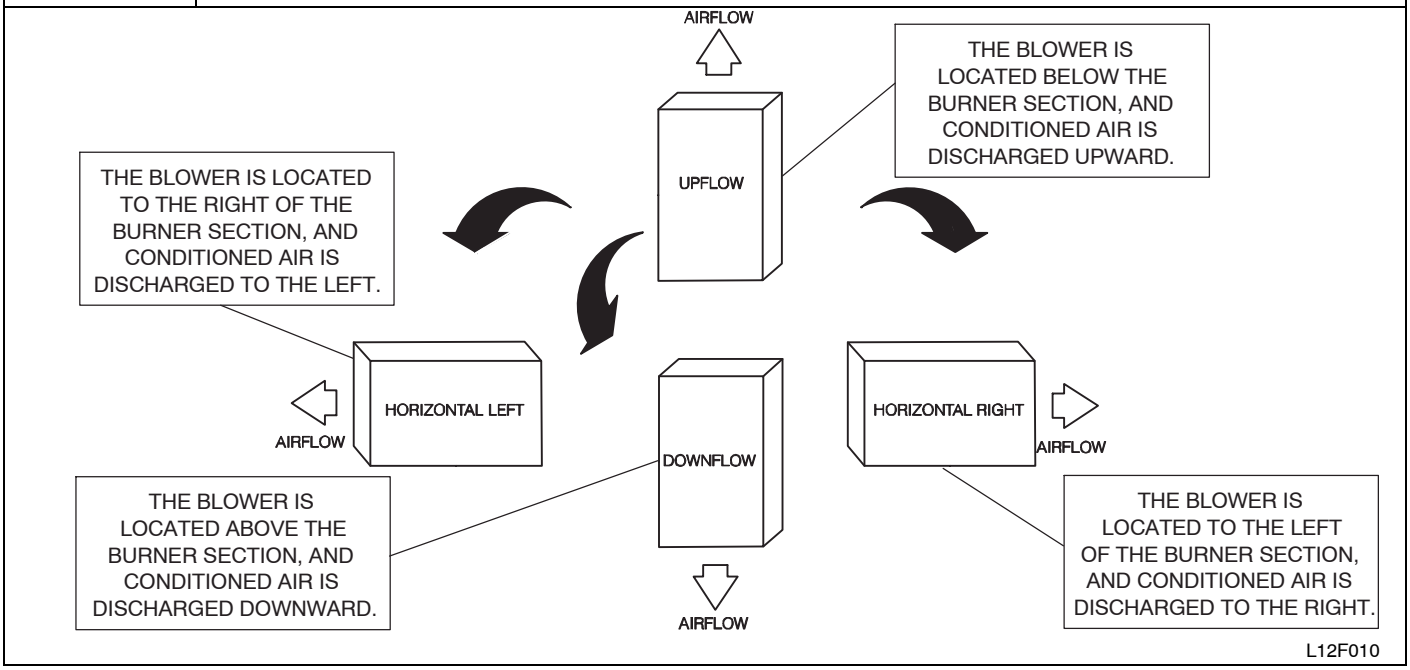

⚠ WARNING

FIRE, INJURY OR DEATH HAZARD

Failure to follow this warning could result in personal injury, death and/or property damage.

When the furnace is installed in a residential garage, the burners and ignition sources must be located at least 18–in. (457 mm) above the floor. The furnace must be located or protected to avoid damage by vehicles. When the furnace is installed in a public garage, airplane hanger, or other building having a hazardous atmosphere, the furnace must be installed in accordance with the current edition of NFPA 54/ANSI Z223.1 or CAN/CSA B149.1. (See **Figure 4**)

Figure 4 **Installation in a Garage**

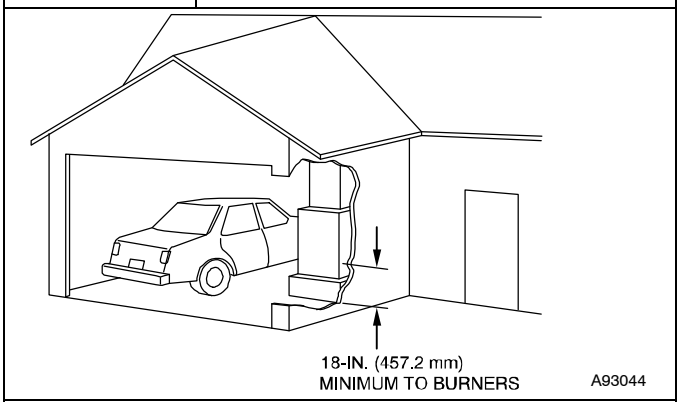

⚠ WARNING

FIRE HAZARD

Failure to follow this warning could result in personal injury, death and/or property damage.

Do not install the furnace on its back or hang furnace with control compartment facing downward. Safety control operation will be adversely affected. Never connect return–air ducts to the back of the furnace. (See **Figure 5**)

Figure 5 **Prohibit Installations**

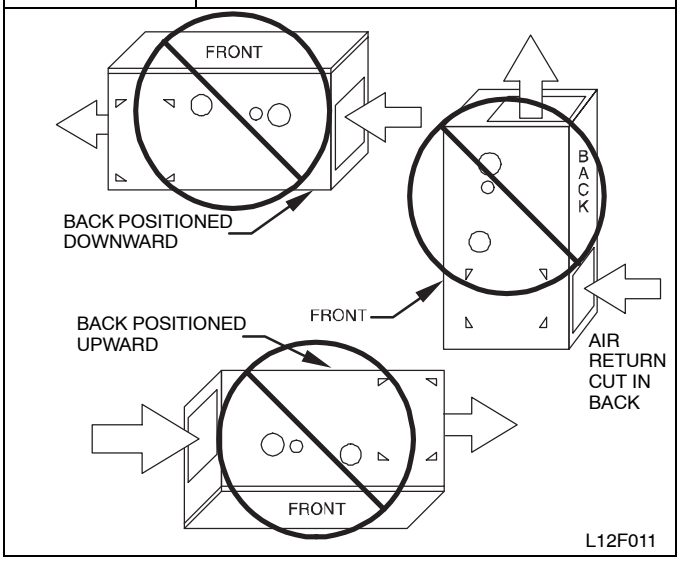

Location Relative to Cooling Equipment

The cooling coil must be installed parallel with, or on the downstream side of the unit to avoid condensation in the heat exchangers. When installed parallel with the furnace, dampers or other flow control must prevent chilled air from entering the furnace. If the dampers are manually operated, they must be equipped with means to prevent operation of either unit unless the damper is in the full–heat or full–cool position.

Air for Combustion and Ventilation

Introduction

Direct Vent (2−pipe) Applications

When the furnace is installed as a direct vent (2-pipe) furnace, no special provisions for air for combustion are required. However, other gas appliances installed in the space with the furnace may require outside air for combustion. Follow the guidelines below to insure that other gas appliances have sufficient air for combustion.

Non−Direct Vent (1−pipe) Applications

When the furnace is installed as a non-direct vent (1-pipe) furnace, it will be necessary to insure there is adequate air for combustion. Other gas appliances installed with the furnace may also require air for combustion and ventilation in addition to the amount of combustion air and ventilation air required for the furnace. Follow the guidelines below to insure that the furnace and other gas appliances have sufficient air for combustion.

Ventilated Combustion Air Applications

When the furnace is installed using the ventilated combustion air option, the attic or crawlspace must freely communicate with the outdoor to provide sufficient air for combustion. The combustion air pipe cannot be terminated in attics or crawlspaces that use ventilation fans designed to operate during the heating season. If ventilation fans are present in these areas, the combustion air pipe must terminate outdoors as a Direct Vent/ 2-Pipe system.

All air for combustion is piped directly to the furnace from a space that is well ventilated with outdoor air (such as an attic, crawlspace, or equipment closet) and the space is well isolated from the living space or garage. In addition, other gas appliances installed in the space with the furnace may require outside air for combustion. Follow the guidelines below to insure that the roof or crawlspace walls have sufficient free area to provide sufficient air for combustion and ventilation for the furnaces. The guidelines below can be used to insure that other gas appliances have sufficient air for combustion.

Provisions for adequate combustion, ventilation, and dilution air must be provided in accordance with:

- **U.S. Installations:** Section 9.3 of the current edition of NFPA 54/ANSI Z223.1, Air for Combustion and Ventilation and applicable provisions of the local building codes.
- **Canadian Installations:** Part 8 of current edition of CAN/CSA−B149.1, Venting Systems and Air Supply for Appliances and all authorities having jurisdiction.

⚠ CAUTION

FURNACE CORROSION HAZARD

Failure to follow this caution may result in furnace damage.

Air for combustion must not be contaminated by halogen compounds, which include fluoride, chloride, bromide, and iodide. These elements can corrode heat exchangers and shorten furnace life. Air contaminants are found in aerosol sprays, detergents, bleaches, cleaning solvents, salts, air fresheners, and other household products.

⚠ WARNING

CARBON MONOXIDE POISONING HAZARD

Failure to follow this warning could result in personal injury or death.

The operation of exhaust fans, kitchen ventilation fans, clothes dryers, attic exhaust fans or fireplaces could create a NEGATIVE PRESSURE CONDITION at the furnace. Make−up air MUST be provided for the ventilation devices, in addition to that required by the furnace. Refer to the Carbon Monoxide Poisoning Hazard warning in the venting section of these instructions to determine if an adequate amount of make−up air is available.

The requirements for combustion and ventilation air depend upon whether or not the furnace is located in a space having a volume of at least 50 cubic feet per 1,000 Btuh (4.8 cubic meters per kW) input rating for all gas appliances installed in the space.

- Spaces having less than 50 cubic feet per 1,000 Btuh (4.8 cubic meters per kW) require the **OUTDOOR COMBUSTION AIR METHOD**.
- Spaces having at least 50 cubic feet per 1,000 Btuh (4.8 cubic meters per kW) may use the **INDOOR COMBUSTION AIR, STANDARD or KNOWN AIR INFILTRATION METHOD**.

Outdoor Combustion Air Method

1. Provide the space with sufficient air for proper combustion, ventilation, and dilution of flue gases using permanent horizontal or vertical duct(s) or opening(s) directly communicating with the outdoors or spaces that freely communicate with the outdoors.
2. **Figure 6** illustrates how to provide TWO OUTDOOR OPENINGS, one inlet and one outlet combustion and ventilation air openings to the outdoors.
   a. One opening **MUST** commence within 12-in. (300 mm) of the ceiling and the second opening MUST commence within 12-in. (300 mm) of the floor.
   b. Size openings and ducts per **Figure 6** and **Table 3**.
   c. TWO HORIZONTAL DUCTS require 1 square inch (25.4 square mm) of free area per 2,000 Btuh (1,100 mm^2/kW) of combined input for all gas appliances in the space per **Figure 6** and **Table 3**.
   d. TWO OPENINGS OR VERTICAL DUCTS require 1 square inch (25.4 square mm)of free area per 4,000 Btuh (550 mm^2/kW) for combined input of all gas appliances in the space per **Figure 6** and **Table 3**.
3. ONE OUTDOOR OPENING requires:
   a. 1 sq. in. (25.4 square mm)of free area per 3,000 Btuh (734 mm^2/kW) for combined input of all gas appliances in the space per **Table 3** and
   b. Not less than the sum of the areas of all vent connectors in the space.

The opening shall commence within 12-in. (300 mm) of the ceiling. Appliances in the space shall have clearances of at least 1-in. (25 mm) from the sides and back and 6-in. (150 mm) from the front. The opening shall directly communicate with the outdoors or shall communicate through a vertical or horizontal duct to the outdoors or spaces (crawl or attic) that freely communicate with the outdoors.

Indoor Combustion Air© NFPA & AGA Standard and Known-Air-Infiltration Rate Methods

Indoor combustion air is permitted for combustion, ventilation, and dilution, if the **Standard** or **Known-Air-Infiltration Rate** Method is used.

⚠ WARNING

CARBON MONOXIDE POISONING HAZARD

Failure to follow this warning could result in personal injury or death.

Many homes require air to be supplied from outdoors for furnace combustion, ventilation, and dilution of flue gases.

The furnace combustion air supply must be provided in accordance with this instruction manual.

The **Standard** Method:

1. The space has no less volume than 50 cubic feet per 1,000 Btuh (4.8 cubic meters per kW) of the maximum input ratings for all gas appliances installed in the space and
2. The air infiltration rate is not known to be less than 0.40 air changes per hour (ACH).

The **Known Air Infiltration Rate** Method shall be used, if the infiltration rate is known to be:

1. Less than 0.40 ACH and
2. Equal to or greater than 0.10 ACH

Infiltration rates greater than 0.60 ACH shall not be used. The minimum required volume of the space varies with the number of ACH and shall be determined per **Table 4** or Equations 1 and 2. Determine the minimum required volume for each appliance in the space and add the volumes together to get the total minimum required volume for the space.

Table 4 – Minimum Space Volumes were determined by using the following equations from the current edition of National Fuel Gas Code ANSI Z223.1/NFPA 54, 9.3.2.2:

1. For **other than fan-assisted appliances**, such as a draft hood-equipped water heater

$$\text{Volume}_{\text{Other}} = \frac{21\text{ft}^3}{\text{ACH}}\left(\frac{I_{\text{other}}}{1000\ \text{Btu/hr}}\right)$$ A04002

2. For **fan-assisted appliances** such as this furnace:

$$\text{Volume}_{\text{Fan}} = \frac{15\text{ft}^3}{\text{ACH}}\left(\frac{I_{\text{fan}}}{1000\ \text{Btu/hr}}\right)$$ A04003

If:

I_{other}=combined input of all **other than fan-assisted appliances** in Btuh/hr

I_{fan}=combined input of all **fan-assisted appliances** in Btuh/hr

ACH = air changes per hour (ACH shall not exceed 0.60.)

The following requirements apply to the **Standard** Method and to the **Known Air Infiltration Rate** Method.

1. Adjoining rooms can be considered part of a space if:
   a. There are no closable doors between rooms.
   b. Combining spaces on same floor level. Each opening shall have free area of at least 1-in.^{2}/1,000 Btuh (2,000 mm^2/kW) of the total input rating of all gas appliances in the space, but not less than 100-in.^{2} (0.06 m^2). One opening shall commence within 12–in. (300 mm) of the ceiling and the second opening shall commence within 12-in. (300 mm) of the floor. The minimum dimension of air openings shall be at least 3-in. (80 mm). (See **Figure 7**)
   c. Combining space on different floor levels. The volumes of spaces on different floor levels shall be considered as communicating spaces if connected by one or more permanent openings in doors or floors having free area of at least 2–in.^{2}/1,000 Btuh (4,400 mm^2/kW) of total input rating of all gas appliances.
2. An attic or crawlspace may be considered a space that freely communicates with the outdoors provided there are adequate permanent ventilation openings directly to outdoors having free area of at least 1-in.^{2}/4,000 Btuh of total input rating for all gas appliances in the space.
3. In spaces that use the **Indoor Combustion Air** Method, infiltration should be adequate to provide air for combustion, permanent ventilation and dilution of flue gases. However, in buildings with unusually tight construction, additional air MUST be provided using the methods described in the **Outdoor Combustion Air** Method section.
4. Unusually tight construction is defined as Construction with:
   a. Walls and ceilings exposed to the outdoors have a continuous, sealed vapor barrier. Openings are gasketed or sealed and
   b. Doors and openable windows are weatherstripped and
   c. Other openings are caulked or sealed. These include joints around window and door frames, between sole plates and floors, between wall-ceiling joints, between wall panels, at penetrations for plumbing, electrical and gas lines, etc.

Combination of Indoor and Outdoor Air

1. Indoor openings shall comply with the **Indoor Combustion Air** Method below and,
2. Outdoor openings shall be located as required in the **Outdoor Combustion Air** Method mentioned previously and,
3. Outdoor openings shall be sized as follows:
   a. Calculate the Ratio of all Indoor Space volume divided by required volume for **Indoor Combustion Air** Method.
   b. Outdoor opening size reduction **Factor** is one minus the **Ratio** in a. above.
   c. Minimum size of Outdoor openings shall be the size required in **Outdoor Combustion Air** Method above multiplied by reduction **Factor** in b. above. The minimum dimension of air openings shall be not less than 3-in. (80 mm).

Table 3	Minimum Free Area Required for Each Combustion Air Opening or Duct to Outdoors					
FURNACE INPUT (BTUH)	TWO HORIZONTAL DUCTS (1 SQ. IN./2,000 BTUH) (1,100 SQ. MM/KW)		SINGLE DUCT OR OPENING (1 SQ. IN./3,000 BTUH) (734 SQ. MM/KW)		TWO OPENINGS OR VERTICAL DUCTS (1 SQ. IN./4,000 BTUH) (550 SQ. MM/KW)	
	Free Area of Opening and Duct Sq. In (Sq. mm)	Round Duct In. (mm) Dia	Free Area of Opening and Duct Sq. In (Sq. mm)	Round Duct In. (mm) Dia	Free Area of Opening and Duct Sq. In (mm)	Round Duct In. (mm) Dia.
40,000	20 (12904)	5 (127)	14 (8696)	5 (127)	10 (6452)	4 (102)
60,000	30 (19355)	6 (152)	20 (13043)	5 (127)	15 (9678)	5 (127)
80,000	40 (25807)	7 (178)	27 (17391)	6 (152)	20 (12904)	5 (127)
100,000	50 (32258)	8 (203)	34 (21739)	7 (178)	25 (16130)	6 (152)
120,000	60 (38709)	9 (229)	40 (26087)	7 (178)	30 (19355)	6 (152)
140,000	70 (45161)	10 (254)	47 (30435)	8 (203)	35 (22581)	7 (178)

EXAMPLE: **Determining Free Area**

FURNACE		WATER HEATER		TOTAL INPUT		
100,000	+	30,000	=	(130,000 divided by 4,000)	=	32.5 Sq. In. for each two Vertical Ducts or Openings
60,000	+	40,000	=	(100,000 divided by 3,000)	=	33.3 Sq. In. for each Single Duct or Opening
80,000	+	30,000	=	(110,000 divided by 2,000)	=	55.0 Sq. In. for each two Horizontal Ducts

Table 4	Minimum Space Volumes for 100% Combustion, Ventilation and Dilution Air from Outdoors								
	OTHER THAN FAN-ASSISTED TOTAL (1,000'S BTUH GAS INPUT RATE)			FAN-ASSISTED TOTAL (1,000'S BTUH GAS INPUT RATE)					
ACH	30	40	50	40	60	80	100	120	140
	Space Volume Ft^3 (M^3)								
0.60	1,050 (29.7)	1,400 (39.6)	1,750 (49.5)	1,400 (39.6)	1,500 (42.5)	2,000 (56.6)	2,500 (70.8)	3,000 (84.9)	3,500 (99.1)
0.50	1,260 (35.6)	1,680 (47.5)	2,100 (59.4)	1,680 (47.5)	1,800 (51.0)	2,400 (67.9)	3,000 (84.9)	3,600 (101.9)	4,200 (118.9)
0.40	1,575 (44.5)	2,100 (59.4)	2,625 (74.3)	2,100 (59.4)	2,250 (63.7)	3,000 (84.9)	3,750 (106.1)	4,500 (127.3)	5,250 (148.6)
0.30	2,100 (59.4)	2,800 (79.2)	3,500 (99.1)	2,800 (79.2)	3,000 (84.9)	4,000 (113.2)	5,000 (141.5)	6,000 (169.8)	7,000 (198.1)
0.20	3,150 (89.1)	4,200 (118.9)	5,250 (148.6)	4,200 (118.9)	4,500 (127.3)	6,000 (169.8)	7,500 (212.2)	9,000 (254.6)	10,500 (297.1)
0.10	6,300 (178.0)	8,400 (237.8)	10,500 (297.3)	8,400 (237.8)	9,000 (254.6)	12,000 (339.5)	15,000 (424.4)	18,000 (509.2)	21,000 (594.1)
0.00	NP	NP	NP	NP	NP	NP	NP	NP	NP

NP = Not Permitted

Figure 6 **Air for Combustion, Ventilation, and Dilution for Outdoors**

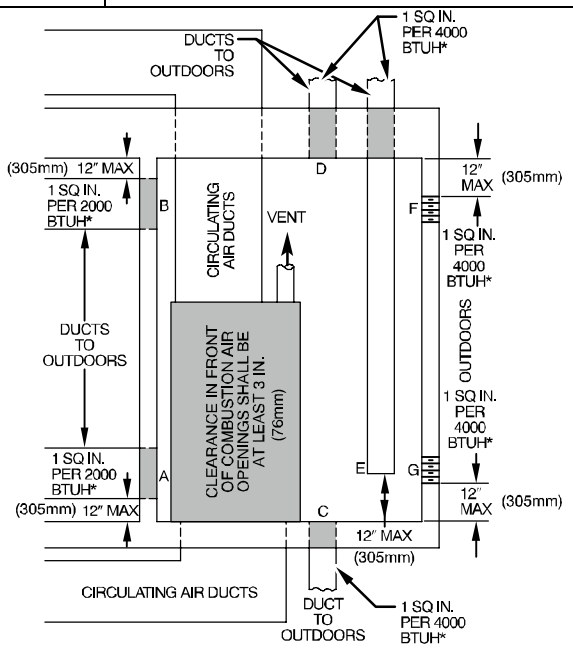

*Minimum dimensions of 3-in. (76mm)
NOTE: Use any of the following combinations of openings:
A & B, C & D, D & E, F & G

L12F012

Figure 7 **Air for Combustion, Ventilation, and Dilution from Indoors**

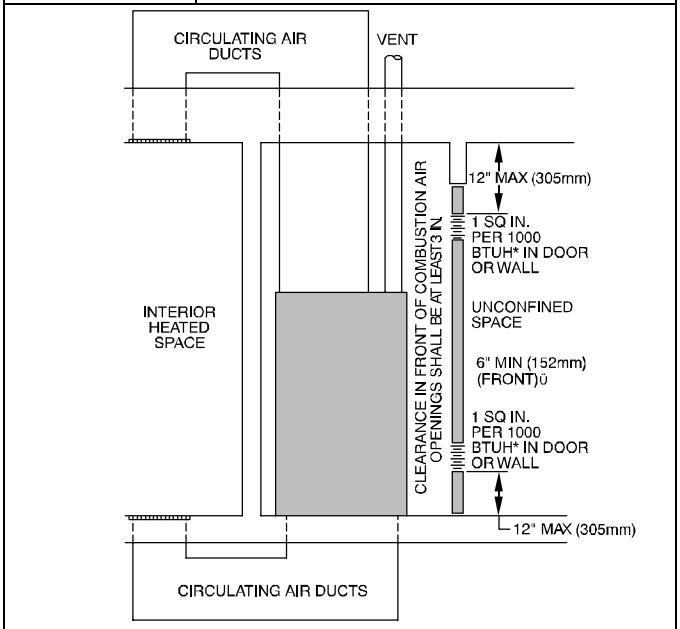

* Minimum opening size is 100 sq in. (64516 sq. mm) with minimum dimensions of 3-in. (76mm)

† Minimum of 3-in. (76mm) when type-B1 vent is used.

L12F013

CONDENSATE TRAP

Condensate Trap – Upflow Orientation

When the furnace is installed in the upflow position, it is not necessary to relocate the condensate trap or associated tubing. Refer to **Figure 8** for upflow condensate trap information. Refer to Condensate Drain section for information how to install the condensate drain.

Condensate Trap – Downflow Orientation

When the furnace is installed in the downflow position, the condensate trap will be initially located at the upper left corner of the collector box, as received from the factory. See the top image in **Figure 9**. When the furnace is installed in the downflow orientation, the condensate trap must be relocated for proper condensate drainage. See the bottom image in **Figure 9**.

To Relocate the Condensate Trap:

- Orient the furnace in the downflow position.
- **Figure 9** shows the condensate trap and tubing before and after relocation. Refer to **Figure 9** to begin the trap conversion.
- Refer to Condensate Drain section for information how to install the condensate drain.

Figure 8 **Upflow Trap Configuration**

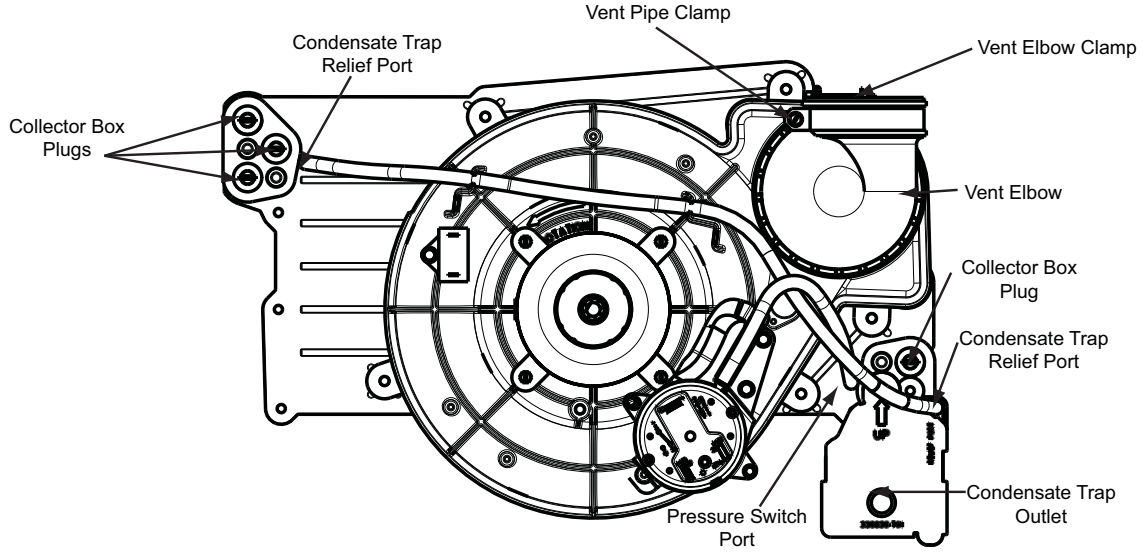

UPFLOW TRAP CONFIGURATION
1 & 2 Stage Units

Representative drawing only, some models may vary in appearance. A11307

Figure 9 **Unconverted Factory Configuration as viewed in the Downflow Orientation**

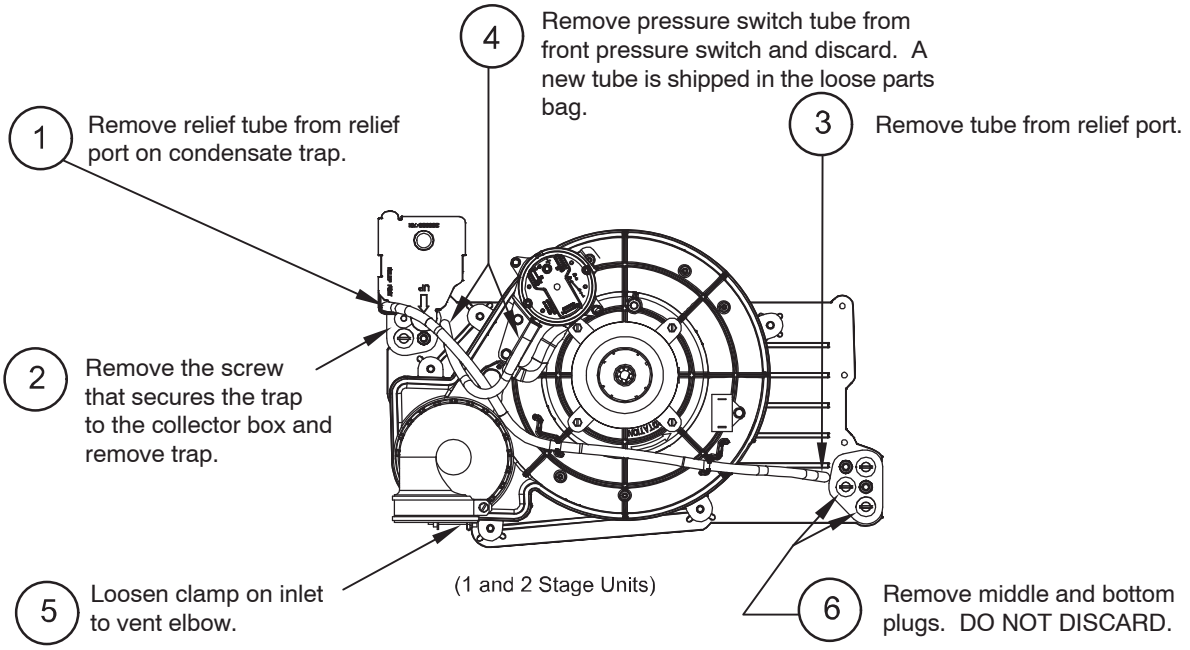

Representative drawing only, some models may vary in appearance. A11587LA

Downflow Trap Configuration

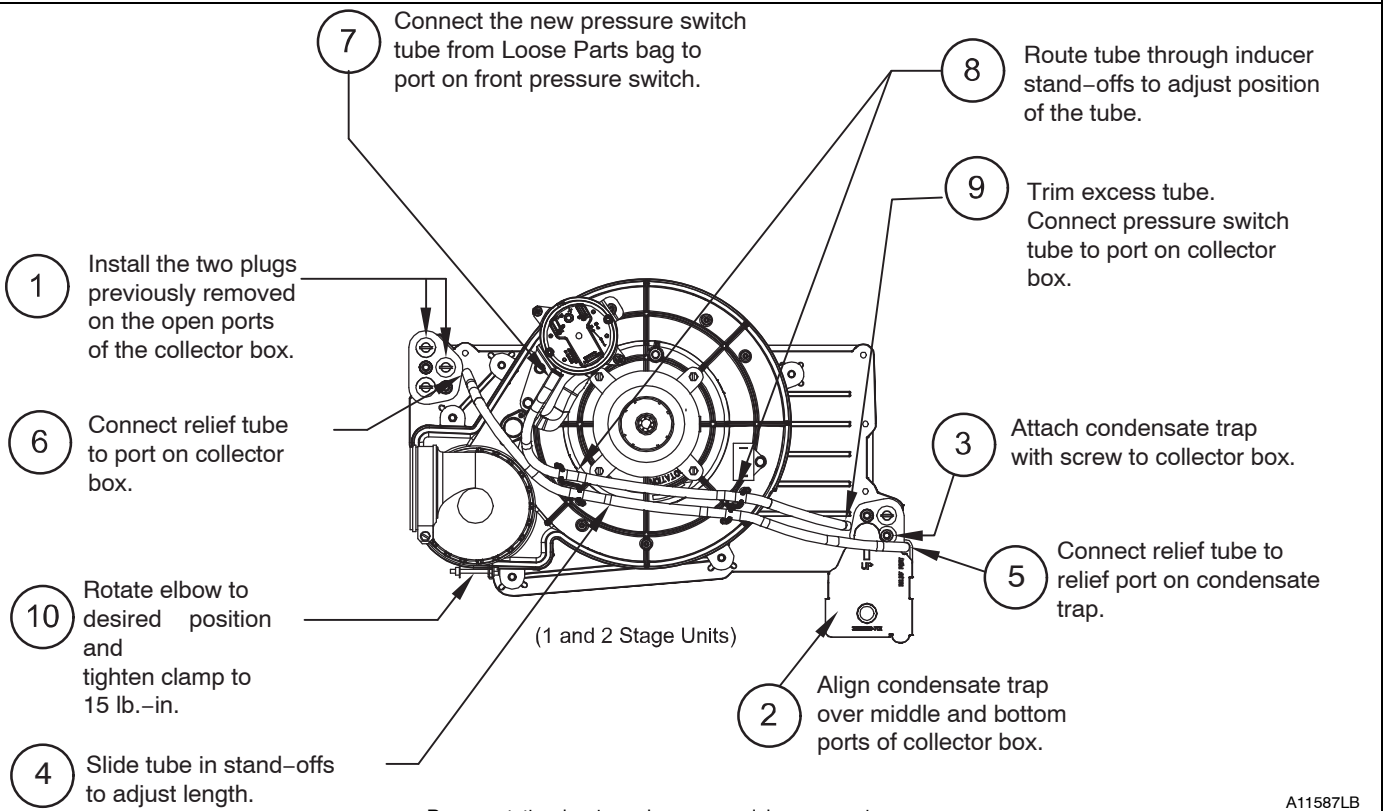

Representative drawing only, some models may vary in appearance.

Condensate Trap – Horizontal Orientation

When the furnace is installed in the horizontal right position, the condensate trap will be initially located at the bottom of the collector box, as received from the factory. See the top image in **Figure 10**. When the furnace is installed in the horizontal left position, the condensate trap will be initially located at the top of the collector box, as received from the factory. See the top image in **Figure 11**. In both cases the trap must be repositioned on the collector box for proper condensate drainage. See bottom images in **Figure 10** and **Figure 11**.

A field–supplied, accessory Horizontal Installation Kit (trap grommet) is required for all direct–vent horizontal installations (only). The kit contains a rubber casing grommet designed to seal between the furnace casing and the condensate trap. (See **Figure 16**)

NOTICE

The field-supplied, accessory horizontal drain trap grommet is ONLY REQUIRED FOR DIRECT VENT APPLICATIONS. It is NOT required for applications using single-pipe or ventilated combustion air venting.

NOTICE

The condensate trap extends below the side of the casing in the horizontal position. A minimum of 2-in. (51 mm) of clearance is required between the casing side and the furnace platform for the trap to extend out of the casing in the horizontal position. Allow at least 1/4-in. per foot (20mm per meter) of slope down and away from the furnace in horizontal sections of drain line.

To Relocate the Condensate Trap:

- Remove the knockout in the casing for the condensate trap.
- Install the grommet in the casing when required for direct–vent horizontal applications.
- Orient the furnace in the desired position.
- Allow for 2 in. (51 mm) of clearance underneath the furnace for the condensate trap and drain line.
- **Figure 10** shows the condensate trap and tubing before and after relocation in the horizontal right position.
- **Figure 11** shows the condensate trap and tubing before and after relocation in the horizontal left position.
- Refer to the appropriate figure to begin the trap conversion.
- Refer to Condensate Drain section for information how to install the condensate drain.

Figure 10 **Unconverted Factory Configuration as viewed in the Horizontal Right Orientation**

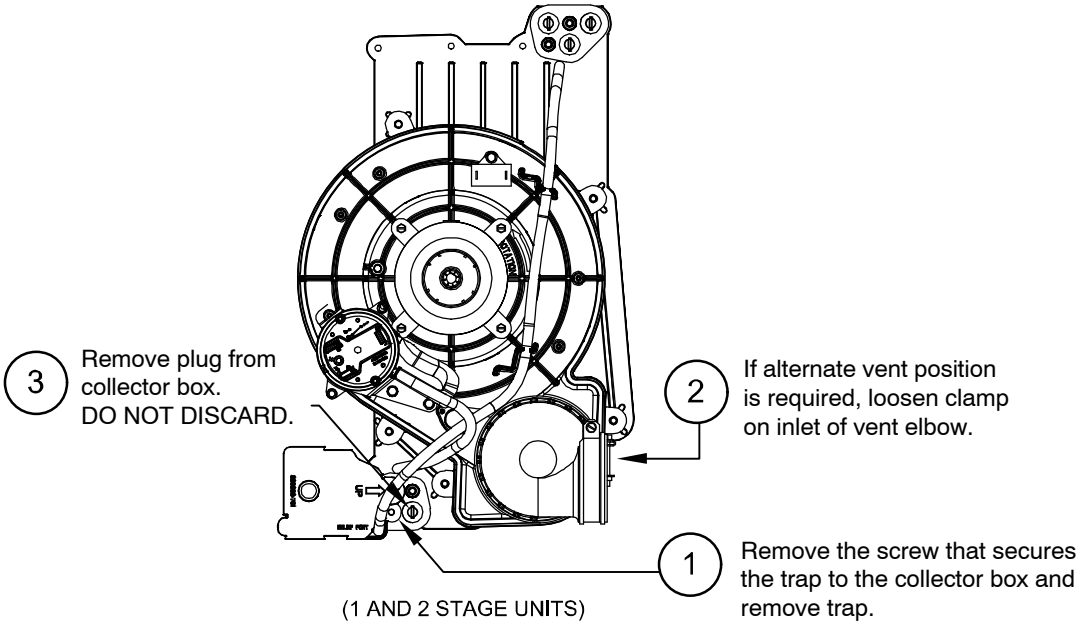

Representative drawing only, some models may vary in appearance. A11573LA

Horizontal Right Trap Configuration

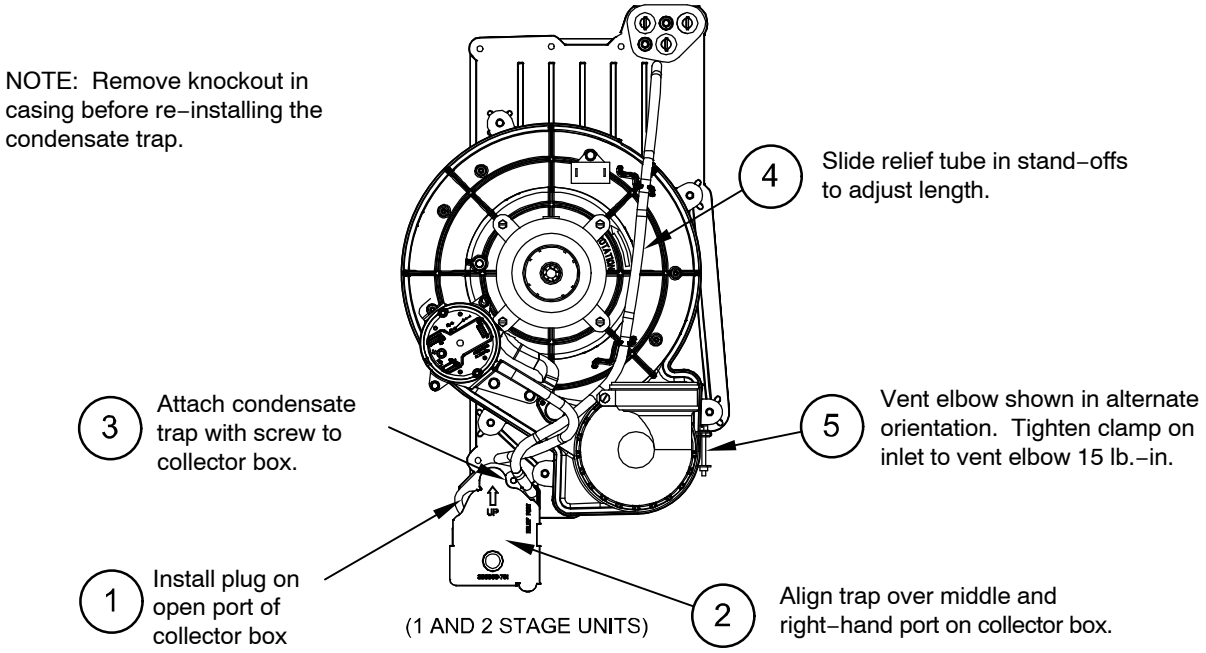

Representative drawing only, some models may vary in appearance. A11573LB

Figure 11 **Unconverted Factory Configuration as viewed in the Horizontal Left Orientation**

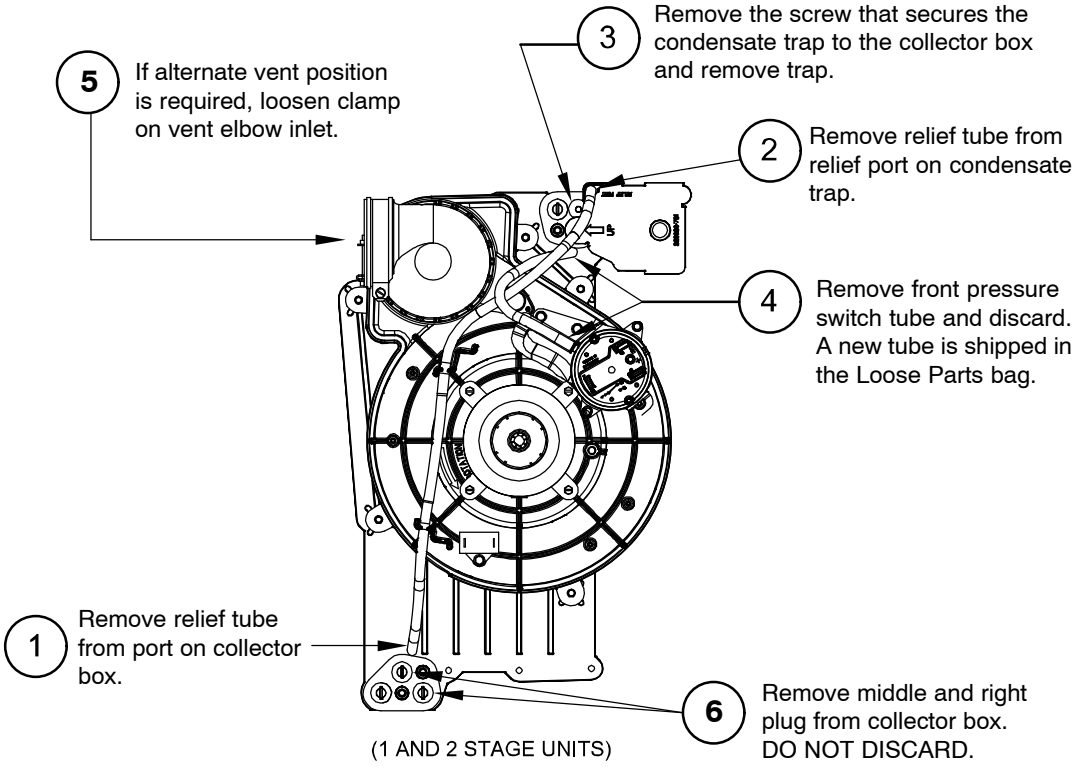

Representative drawing only, some models may vary in appearance.

A11574LA

Horizontal Left Trap Configuration

NOTE: Remove knockout in casing before re–installing the condensate trap.

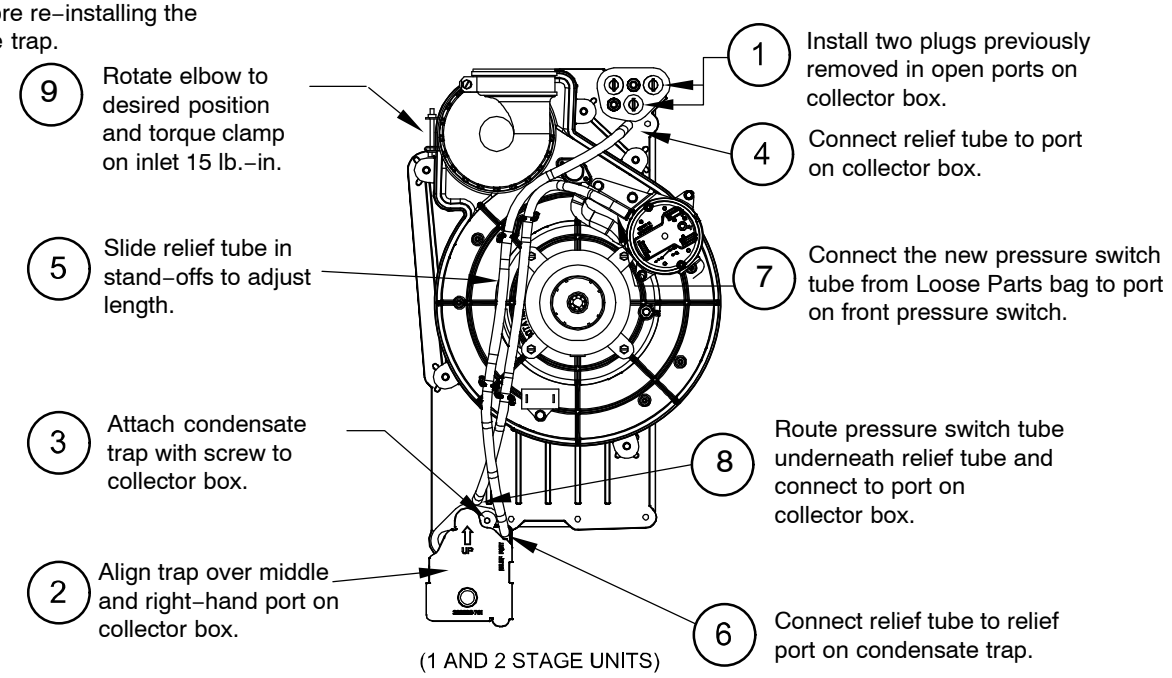

Representative drawing only, some models may vary in appearance.

A11574LB

Condensate Drain Connection

CAUTION

FROZEN AND BURST WATER PIPE HAZARD

Failure to protect against the risk of freezing may result in property damage.

Special precautions MUST be made if installing furnace in an area which may drop below freezing. This can cause improper operation or damage to equipment. If furnace environment has the potential of freezing, the drain trap and drain line must be protected. The use of accessory drain trap heaters, electric heat tape and/or RV antifreeze is recommended for these installations.

CAUTION

PROPERY DAMAGE HAZARD

Failure to follow this caution may result in burst water pipes and/or property damage.

If a condensate pump is installed, a plugged condensate drain or a failed pump may cause the furnace to shut down. Do not leave the home unattended during freezing weather without turning off water supply and draining water pipes or otherwise protecting against the risk of frozen pipes.

DO NOT trap the drain line in any other location than at the condensate drain trap supplied with the furnace. If possible, DO NOT route the drain line where it may freeze. The drain line must terminate at an inside drain to prevent freezing of the condensate and possible property damage.

Special precautions MUST be made if installing furnace in an area which may drop below 32º F (0º C). This can cause improper operation or damage to the equipment. If the furnace environment has the potential of freezing, the drain trap and drain line must be protected. In areas where the temperature may be below 32º F (0º C), a Condensate Freeze Protection kit is required. The kit includes a condensate trap with heat pad and replaces the factory installed condensate trap. Refer to the Accessory section of the Specification Sheets for current kit number. A self–regulating, shielded and waterproof heat tape rated at 3 to 6 watt per foot (10 to 20 watt per meter) at 115 volt, 40° F (4° C) may be used to provide freeze protection of the remaining condensate drain line. Wrap the drain trap and drain line with the heat tape and secure with appropriate plastic ties. Follow the heat tape manufacturer's recommendations. Prime the trap before furnace operation.

The condensate drain line must be supported and/or secured per local codes. Supports and clamps should be spaced to prevent the drain line from sagging or being dislocated from the furnace or termination point. In the absence of local codes, consult the current edition of the National Standard Plumbing Code in the US or the current edition of the National Plumbing Code of Canada.

Upflow/Downflow Orientation

In the Upflow or Downflow orientation, the condensate trap is inside the furnace casing. The condensate drain must be routed from the trap through the furnace casing. The condensate drain can be routed through the left or right side of the casing. (The left or right side is as you are viewing/facing the furnace from the front.)

An indoor coil condensate drain or humidifier drain can be connected to the external furnace condensate drain provided:

a. The drains are not hard piped together, and
b. There is an air gap at the point where the two drain lines meet or
c. All condensate piping is at least 1/2 in. PVC and there is a relief tee at the top of condensate drain piping as shown below:

NOTE: On narrower casings, it may be easier to remove the condensate trap, connect the drain line components and re-install the condensate trap. Read the steps thoroughly to familiarize yourself with the required steps.

For Right Side Condensate Drain:

1. Remove the 7/8–in. knock–out from the right side of the casing. (See **Figure 12** for suggested knockout removal technique.)
2. Remove the pre–formed rubber drain elbow and two spring clamps from the loose parts bag.
3. Slide a spring clamp 1–in. (25 mm) down the plain end (the end without the formed grommet) of the drain elbow.
4. From inside the casing, insert the formed grommet end of the elbow through the 7/8–in. knockout in the casing.
5. Pull the grommet through the casing from the outside until it is seated in the knockout
6. Attach the plain end of the drain elbow to the outlet stub on the drain trap. Secure the drain elbow to the trap with the spring clamp.

The remaining drain line can be constructed from field supplied 1/2–in. CPVC or 3/4–in. PVC pipe in compliance with local building codes. A factory–supplied 1/2–in. CPVC to 3/4–in PVC adapter is supplied in the loose parts bag for use as required.

7. Install the adapter or connect the 1/2–in. CPVC pipe by sliding a spring clamp over the open end of the grommet on the outside of the furnace casing.
8. Open the spring clamp and insert the long end of the adapter of the 1/2–in. CPVC pipe into the outlet stub on the drain elbow.
9. Connect additional condensate piping to a code–approved drain, or to a condensate pump approved for use with acidic furnace condensate and compatible with mineral and vegetable oils, such as canola oil.

Allow at least 1/4–in. per foot (20 mm per meter) of slope down and away from the furnace in horizontal sections of drain line.

TIPS FROM CONTRACTORS: Contractors have found that temporarily removing the inducer assembly in upflow applications while performing the steps below, makes upflow left–side drain connections easier.

Figure 12 **Knockout Removal**

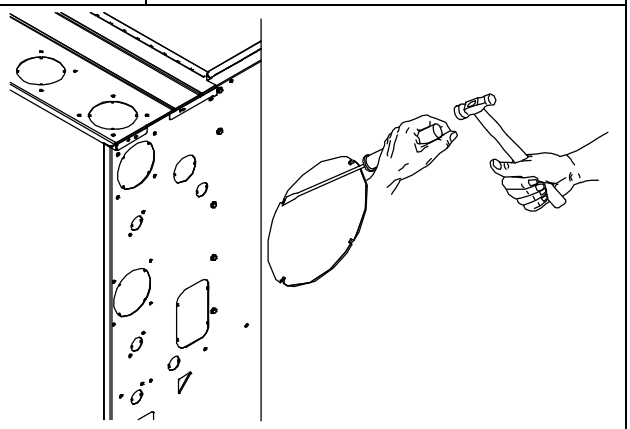

CAUTION

CUT HAZARD

Failure to follow this caution may result in personal injury.

Sheet metal parts may have sharp edges or burrs. Use care and wear appropriate protective clothing, safety glasses and gloves when handling parts, and servicing furnaces.

For Left Side Condensate Drain Connection:

1. For left side condensate drainage, the drain line is routed from the condensate trap, behind the inducer (upflow) or gas valve (downflow) and out through the left side of the furnace casing. A pre-formed 1/2–in. CPVC “Z” pipe is provided with the furnace. The “Z“ pipe is long enough to extend across the casing for drain connections.
2. Locate the “Z” pipe. Remove the pre-formed drain elbow and four spring clamps from the loose parts bag.
3. The “Z” pipe is connected to the condensate trap and the outside of the furnace by modifying the formed rubber drain elbow as shown in **Figure 17**.
4. Remove the formed grommet from the rubber drain elbow by cutting the elbow along the vertical line located about 1 3/8–in. (35 mm) away from the formed grommet. See **Figure 15**. DO NOT DISCARD THE FORMED GROMMET OR THE RUBBER ELBOW. Both of these pieces will be used.

Assemble and route the drain line to the opposite side of the furnace as detailed below:

5. Remove the knock–out from the left side of the casing. (See **Figure 12** for suggested knockout removal technique.)
6. From the outside of the casing, insert the angled end of the ”Z” pipe through drain hole in the left side of the casing and behind the inducer or gas valve. Allow the ”Z” pipe to temporarily rest on the blower shelf (upflow) or burner box (downflow). (**NOTE:** When the inducer housing has been removed to ease installation in upflow applications, this step is not needed.)
7. After inserting the “Z” pipe through the casing, slide a spring clamp over each end of the “Z” pipe.
8. From inside the casing, insert the short end of the formed grommet cut from the rubber drain elbow through the 7/8–in. drain knockout in the casing.
9. Pull the grommet through the casing from the outside until it is seated in the knockout.
10. Align the ”Z” pipe with the long end of the grommet inside the furnace and insert slightly. The angled end of the tube at the other side of the casing should be facing the front of the furnace.
11. Slide a spring clamp over the end of the remaining rubber drain elbow.
12. Attach the drain elbow to the angled end of ”Z” pipe and the drain trap outlet stub. Adjust the length of ”Z” pipe inserted into the grommet at the opposite side of the furnace as necessary for proper fit and positioning. In both upflow and downflow orientations, the ”Z” pipe should NOT be resting on any sheet metal parts.
13. Secure the rubber elbow to the drain trap and the ”Z” pipe with spring clamps.
14. Secure the grommet to the ”Z” pipe with the spring clamp. The remaining drain line can be constructed from field supplied 1/2–in. CPVC or 3/4–in. PVC pipe, in compliance with local building codes. A factory–supplied 1/2–in. CPVC to 3/4–in. PVC adapter is supplied in the loose parts bag for use as required.
15. Install the adapter or connect the 1/2–in. CPVC pipe by sliding a spring clamp over the open end of the grommet on the outside the furnace casing.
16. Open the spring clamp and insert the long end of the adapter or the 1/2–in. CPVC pipe into the outlet stub on the drain elbow.
17. Connect additional condensate piping to a code–approved drain, or to a condensate pump approved for use with acidic furnace condensate and compatible with mineral and vegetable oils, such as canola oil.

Allow at least 1/4-in. per foot (20 mm per meter) of slope down and away from the furnace in horizontal sections of drain line.

NOTICE

The field-supplied, accessory horizontal drain trap grommet is ONLY REQUIRED FOR DIRECT VENT APPLICATIONS. It is NOT required for applications using single-pipe or ventilated combustion air venting.

TIPS FROM CONTRACTORS: When installing the furnace horizontally, use the entire drain elbow (that is, do NOT cut as shown in **Figure 15**) to connect the trap to the drain line. This helps to prevent bumps and shocks to the drain line from damaging the furnace drain trap. Avoid misalignment of the drain pipe which may cause kinks in the elbow.

Horizontal Orientation

1. The condensate trap outlet extends 2–in. (51 mm) below the furnace casing. Leave enough clearance between the furnace and the furnace platform for the trap.
2. To allow for servicing the trap, the condensate drain elbow in the loose parts bag can be used to make a coupler to allow for future service of the condensate trap and drain line.
3. Remove the knock–out for the condensate trap in the side of the casing.
4. Install the drain trap grommet in the casing, if required for direct–vent applications. If necessary, remove the trap, install the grommet and re–install the trap.
5. Remove the pre–formed rubber drain elbow and two spring clamps from the loose parts bag.
6. Connect the full or modified elbow and/or grommet to the outlet of the condensate trap with one spring clamp. Avoid misalignment of the drain pipe which may cause kinks in the elbow or grommet.
7. The remaining drain line can be constructed from field supplied 1/2–in. CPVC or 3/4–in. PVC pipe, in compliance with local building codes. A factory–supplied 1/2–in. CPVC to 3/4–in. PVC adapter is supplied in the loose parts bag for use as required.
8. Install the adapter or connect the 1/2–in. CPVC pipe by sliding a spring clamp over the open end of the elbow or grommet on the outside the furnace casing.
9. Open the spring clamp and insert the long end of the adapter or the 1/2–in. CPVC pipe into the outlet stub on the drain elbow.
10. Connect additional condensate piping to a code–approved drain, or to a condensate pump approved for use with acidic furnace condensate and compatible with mineral and vegetable oils, such as canola oil.

Allow at least 1/4-in. per foot (20 mm per meter) of slope down and away from the furnace in horizontal sections of drain line.

Figure 13 Example of Field Drain Attachment (NOT ALLOWED)

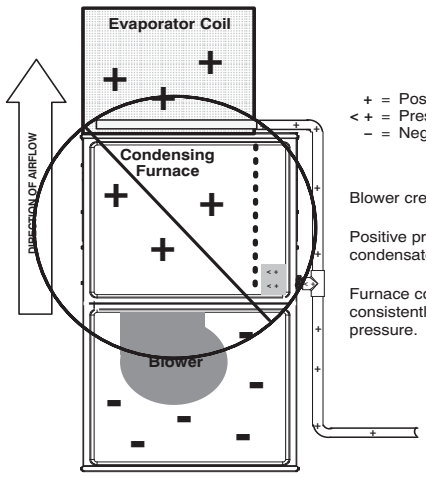

+ = Positive pressure
< + = Pressure lower than areas with +
– = Negative pressure

Blower creates positive pressure.

Positive pressure extends into coil condensate drain (no trap).

Furnace condensate does not flow consistently when drain is at positive pressure.

A14532A

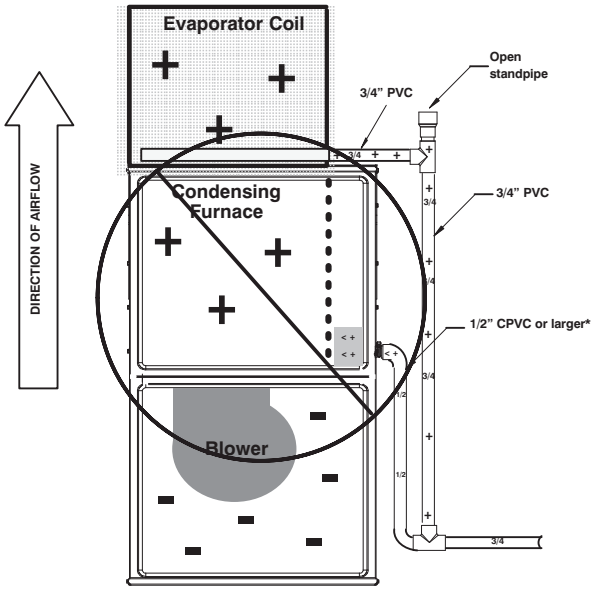

+ = Positive pressure
< + = Pressure lower than areas with +
– = Negative pressure

A14532B

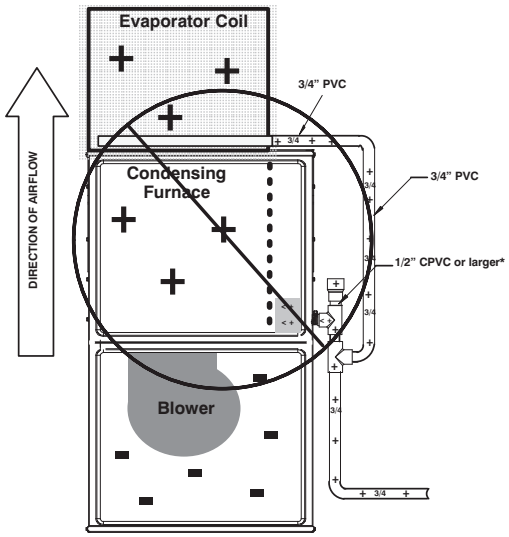

+ = Positive pressure
< + = Pressure lower than areas with +
– = Negative pressure

A14532C

Figure 14 Example of Field Drain Attachment

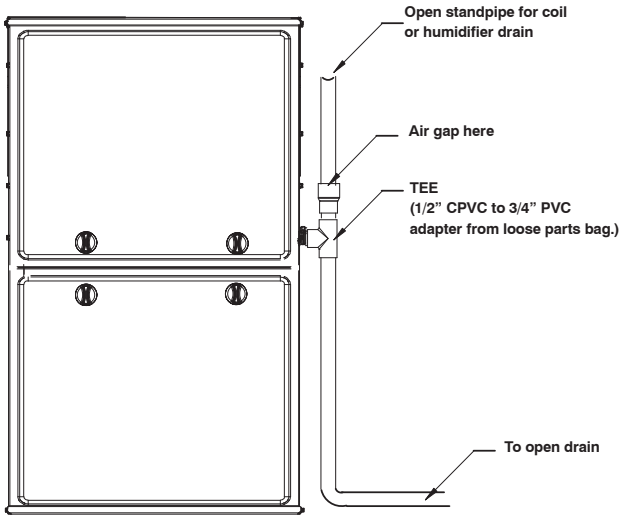

L14F024

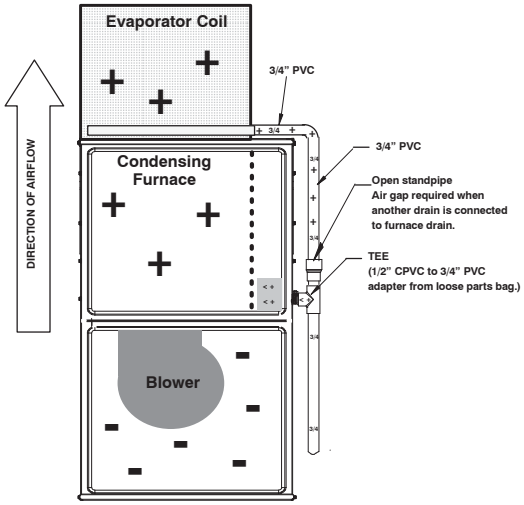

+ = Positive pressure
< + = Pressure lower than areas with +
– = Negative pressure

L14F025

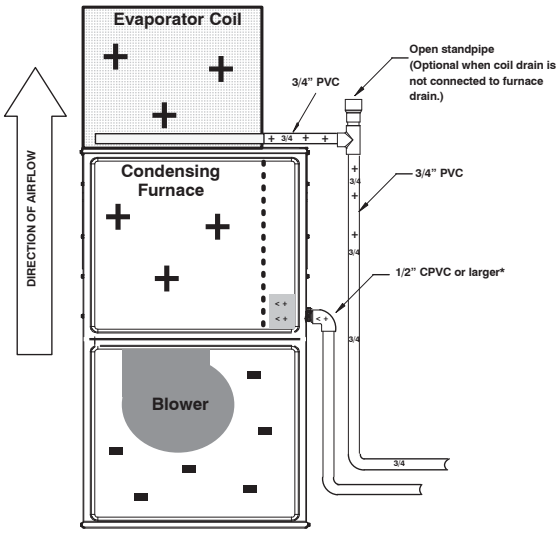

+ = Positive pressure
< + = Pressure lower than areas with +
– = Negative pressure

L14F026

Example of Field Drain Attachment cont.

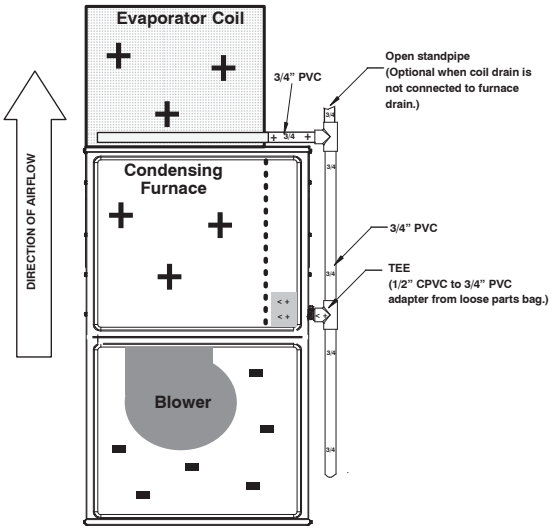

L14F027

Figure 15 Modify Rubber Drain Elbow

Cut line for left side condensate drain.
Do not discard parts after cutting.

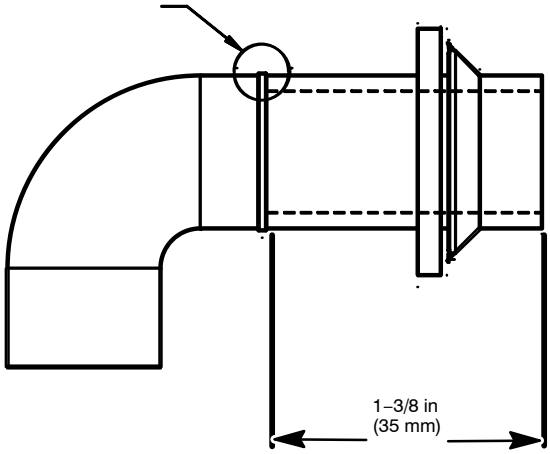

L11F089

Figure 16 Horizontal Drain Trap Grommet

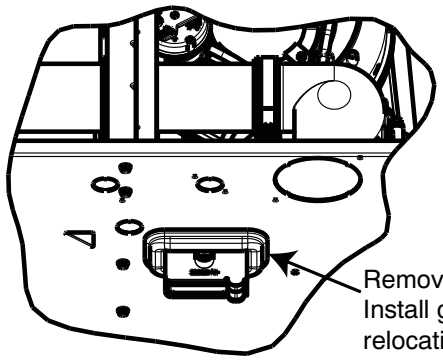

A11348

Figure 17 Drain Trap Connection and Routing

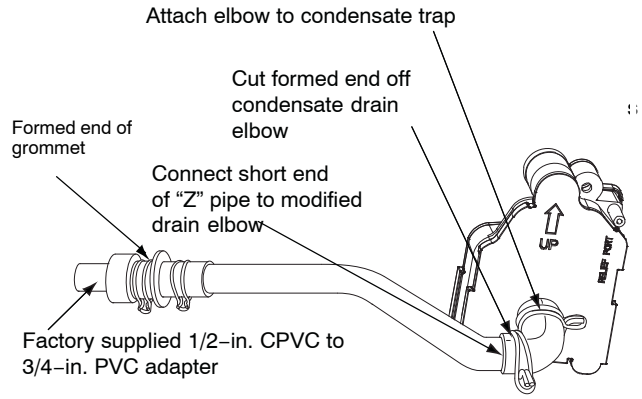

TRAP, DRAIN ELBOW WITH DISCHARGE PIPE

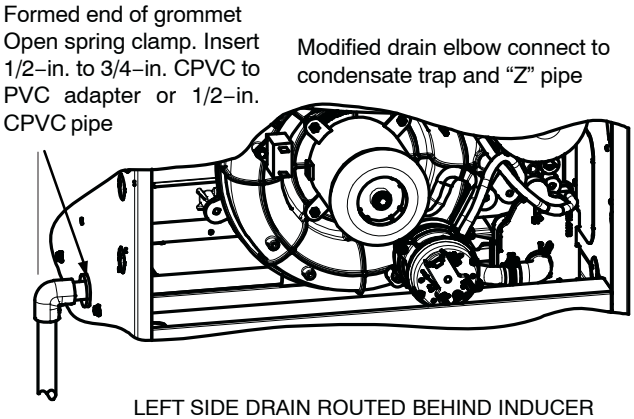

LEFT SIDE DRAIN ROUTED BEHIND INDUCER
NOTE: Remove Inducer Housing for easier access, if desired.

L12F015

Figure 18 Formed Rubber Drain Grommet

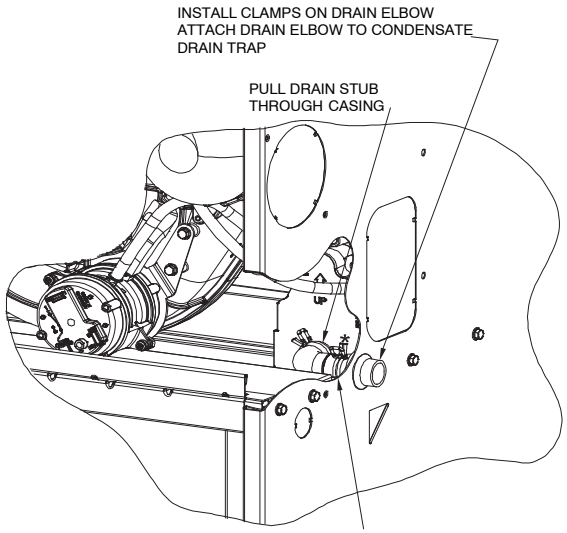

OPEN SPRING CLAMP

INSERT FACTORY–SUPPLIED 1/2–IN. CPVC TO 3/4–IN. PVC ADAPTER OR 1/2–IN. CPVC PIPE

*CLAMP MAY BE LOCATED ON OUTSIDE OF DRAIN ELBOW

RIGHT SIDE DRAIN INSTALLATION

L12F022

INSTALLATION

NOTICE

This furnace is certified to leak 2% or less of nominal air conditioning CFM delivered when pressurized to 1-inch water column (250 Pa) with all present air inlets (including bottom closure in upflow and horizontal applications), air outlets, and plumbing and electrical ports sealed.

UPFLOW INSTALLATION

NOTE: The furnace must be pitched as shown in **Figure 19** for proper condensate drainage.

Figure 19 Furnace Pitch Requirements

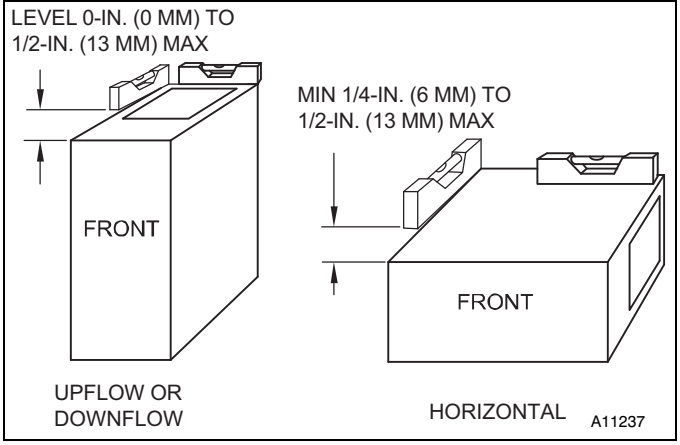

Supply Air Connections

For a furnace not equipped with a cooling coil, the outlet duct shall be provided with a removable access panel. This opening shall be accessible when the furnace is installed and shall be of such a size that the heat exchanger can be viewed for possible openings using light assistance or a probe can be inserted for sampling the air stream. The cover attachment shall prevent leaks.

Connect supply–air duct to flanges on furnace supply–air outlet. Bend flange upward to 90° with wide duct pliers. (See **Figure 23**) The supply–air duct must be connected to ONLY the furnace supply–outlet–air duct flanges or air conditioning coil casing (when used). DO NOT cut main furnace casing side to attach supply air duct, humidifier, or other accessories. All supply–side accessories MUST be connected to duct external to furnace main casing.

Return Air Connections

⚠ WARNING

FIRE HAZARD

A failure to follow this warning could cause personal injury, death and/or property damage.

Never connect return–air ducts to the back of the furnace. Follow instructions below.

The return–air duct must be connected to bottom, sides (left or right), or a combination of bottom and side(s) of main furnace casing. Bypass humidifier may be attached into unused return air side of the furnace casing. (See **Figure 28, Figure 29** and **Figure 30**.)

Bottom Return Air Inlet

These furnaces are shipped with bottom closure panel installed in bottom return–air opening. Remove and discard this panel when bottom return air is used. To remove bottom closure panel, perform the following:

1. Tilt or raise furnace and remove four (4) screws holding bottom plate. (See **Figure 20**)
2. Remove bottom plate.
3. Remove bottom closure panel.
4. Reinstall bottom plate and screws.

Figure 20 Removing Bottom Closure Panel

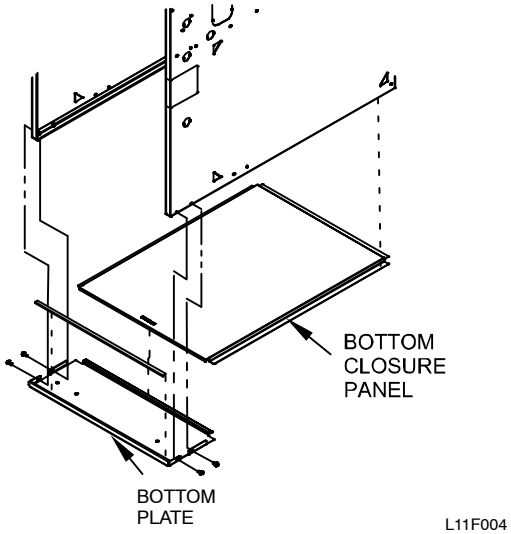

Side Return Air Inlet

These furnaces are shipped with bottom closure panel installed in bottom return–air opening. This panel MUST be in place when only side return air is used.

NOTE: Side return–air openings can be used in UPFLOW and most HORIZONTAL configurations. Do not use side return–air openings in DOWNFLOW configuration. (See **Figure 28, Figure 29 and Figure 30)**

Leveling Legs (If Desired)

In upflow position with side return inlet(s), leveling legs may be used. (See **Figure 21**) Install field–supplied, 5/16 x 1–1/2–in. (8 x 38 mm) (max) corrosion–resistant machine bolts, washers and nuts.

Figure 21 Leveling Legs

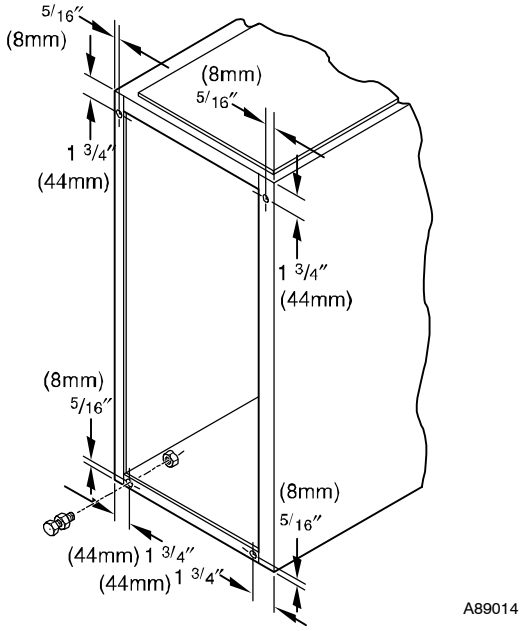

NOTE: Bottom closure must be used when leveling legs are used. It may be necessary to remove and reinstall bottom closure panel to install leveling legs. To remove bottom closure panel, see Step 1 in Bottom Return Air Inlet section.

To install leveling legs:

1. Position furnace on its back. Locate and drill a hole in each bottom corner of furnace.
2. For each leg, install nut on bolt and then install bolt with nut in hole. (Install flat washer if desired.)
3. Install another nut on other side of furnace base. (Install flat washer if desired.)
4. Adjust outside nut to provide desired height, and tighten inside nut to secure arrangement.
5. Reinstall bottom closure panel if removed.

DOWNFLOW INSTALLATION

NOTE: The furnace must be pitched as shown in **Figure 19** for proper condensate drainage.

Supply Air Connections

NOTE: For downflow applications, this furnace is approved for use on combustible flooring when any one of the following two accessories are used (see specification sheets for list of approved accessories):

- Special Base – NAHA01101SB
- Cased Coil Assembly – EAM4X, END4X, ENW4X

1. Determine application being installed from **Table 5**.
2. Construct hole in floor per **Table 5** and **Figure 22**.
3. Construct plenum to dimensions specified in **Table 5** and **Figure 22**.
4. Install as shown in **Figure 24**. If Coil Assembly Part is used, install as shown in **Figure 25** .

Figure 22 Floor and Plenum Opening Dimensions

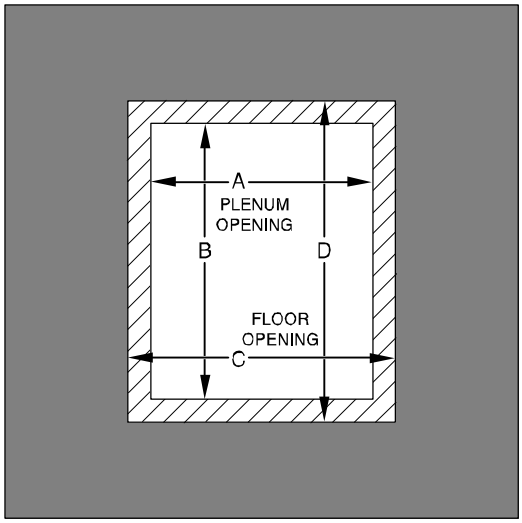

NOTE: It is recommended that the perforated supply–air duct flanges be completely removed from furnace when installing the furnace on a factory–supplied cased coil or coil box. To remove the supply–air duct flange, use wide duct pliers or hand seamers to bend flange back and forth until it breaks off. Be careful of sharp edges. (See **Figure 23**)

⚠ CAUTION

CUT HAZARD

Failure to follow this caution may result in personal injury.

Sheet metal parts may have sharp edges or burrs. Use care and wear appropriate protective clothing, safety glasses and gloves when handling parts, and servicing furnaces.

Connect supply–air duct to supply–air outlet on furnace. Bend flange inward past 90° with wide duct pliers (See **Table 1 Figure 23**) The supply–air duct must be connected to ONLY the furnace supply outlet or air conditioning coil casing (when used). When installed on combustible material, supply–air duct must be connected to ONLY the factory–approved accessory subbase, or a factory–approved air conditioning coil casing. **DO NOT** cut main furnace casing to attach supply air duct, humidifier, or other accessories. All supply–side accessories MUST be connected to duct external to furnace casing.

Return Air Connections

⚠ WARNING

FIRE HAZARD

A failure to follow this warning could cause personal injury, death and/or property damage.

Never connect return–air ducts to the back of the furnace. Follow instructions below.

The return–air duct must be connected to return–air opening (bottom inlet) as shown in **Figure 28**. DO NOT cut into casing sides (left or right). Bypass humidifier connections should be made at ductwork or coil casing sides exterior to furnace. (See **Figure 28**)

Bottom Return Air Inlet

These furnaces are shipped with bottom closure panel installed in bottom return–air opening. Remove and discard this panel when bottom return air is used. To remove bottom closure panel, perform the following:

1. Tilt or raise furnace and remove four (4) screws holding bottom plate. (See **Figure 20**)
2. Remove bottom plate.
3. Remove bottom closure panel.
4. Reinstall bottom plate and screws.

HORIZONTAL INSTALLATION

NOTE: The furnace must be pitched forward as shown in **Figure 19** for proper condensate drainage.

⚠ WARNING

FIRE, EXPLOSION, AND CARBON MONOXIDE POISONING HAZARD

Failure to follow this warning could result in personal injury, death, or property damage.

Do not install the furnace on its back or hang furnace with control compartment facing downward. Safety control operation will be adversely affected. Never connect return–air ducts to the back of the furnace.

⚠ CAUTION

MINOR PROPERTY HAZARD

Failure to follow this caution may result in minor property damage.

Local codes may require a drain pan under entire furnace and condensate trap when a condensing furnace is used in an attic application or over a finished ceiling.

The furnace can be installed horizontally in an attic or crawlspace on either the left−hand (LH) or right−hand (RH) side. The furnace can be hung from floor joists, rafters or trusses or installed on a non−combustible platform, blocks, bricks or pad.

Suspended Furnace Support

The furnace may be supported under the entire length of the furnace with threaded rod and angle iron. (See **Figure 26**) Secure angle iron to bottom of furnace as shown.

Platform Furnace Support

Construct working platform at location where all required furnace clearances are met. (See **Table 1** and **Figure 27**) For furnaces with 1−in. (25 mm) clearance requirement on side, set furnace on non−combustible blocks, bricks or angle iron. For crawlspace installations, if the furnace is not suspended from the floor joists, the ground underneath furnace must be level and the furnace set on blocks or bricks.

Figure 23 Duct Flanges

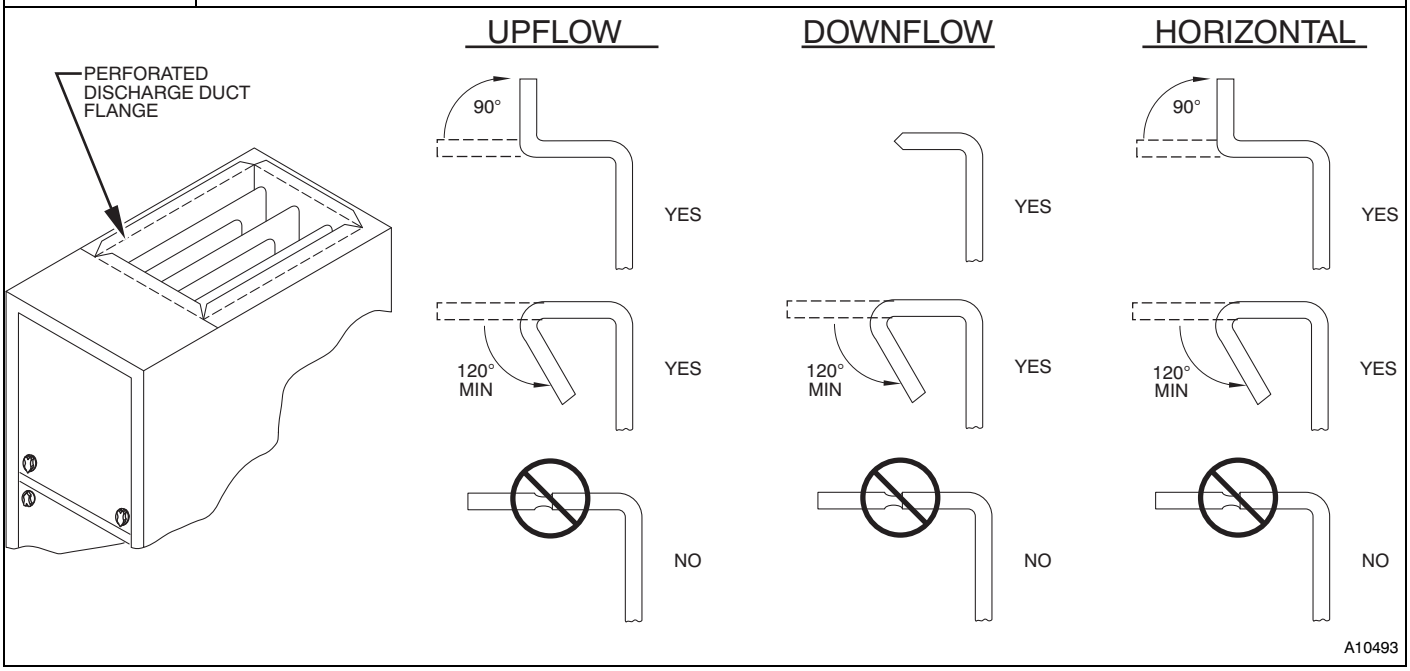

Table 5	Opening Dimensions – in. (mm)				
FURNACE CASING WIDTH IN. (mm)	APPLICATION	PLENUM OPENING		FLOOR OPENING	
		A	B	C	D
14–3/16 (360)	Upflow Applications on Combustible or Noncombustible Flooring (subbase not required)	12–11/16 (322)	21–5/8 (549)	13–5/16 (338)	22–1/4 (565)
	Downflow Applications on Noncombustible Flooring (subbase not required)	12–9/16 (319)	19 (483)	13–3/16 (335)	19–5/8 (498)
	Downflow applications on combustible flooring (subbase required)	11–13/16 (284)	19 (483)	13–7/16 (341)	20–5/8 (600)
	Downflow Applications on Combustible Flooring with Coil Assembly or coil box (subbase not required)	12–5/16 (319)	19 (483)	13–5/16 (338)	20 (508)
17–1/2 (445)	Upflow Applications on Combustible or Noncombustible Flooring (subbase not required)	16 (406)	21–5/8 (549)	16–5/8 (422)	22–1/4 (565)
	Downflow Applications on Noncombustible Flooring (subbase not required)	15–7/8 (403)	19 (483)	16–1/2 (419)	19–5/8 (498)
	Downflow applications on combustible flooring (subbase required)	15–1/8 (384)	19 (483)	16–3/4 (425)	20–5/8 (600)
	Downflow Applications on Combustible Flooring with Coil Assembly or coil box (subbase not required)	15–1/2 (394)	19 (483)	16–1/2 (419)	20 (508)
21 (533)	Upflow Applications on Combustible or Noncombustible Flooring (subbase not required)	19–1/2 (495)	21–5/8 (549)	20–1/8 (511)	22–1/4 (565)
	Downflow Applications on Noncombustible Flooring (subbase not required)	19–3/8 (492)	19 (483)	20 (508)	19–5/8 (498)
	Downflow applications on combustible flooring (subbase required)	18–5/8 (473)	19 (483)	20–1/4 (514)	20–5/8 (600)
	Downflow Applications on Combustible Flooring with Coil Assembly or coil box (subbase not required)	19 (483)	19 (483)	20 (508)	20 (508)
24–1/2 (622)	Upflow Applications on Combustible or Noncombustible Flooring (subbase not required)	23 (584)	21–1/8 (537)	23–5/8 (600)	22–1/4 (565)
	Downflow Applications on Noncombustible Flooring (subbase not required)	22–7/8 (581)	19 (483)	23–1/2 (597)	19–5/8 (498)
	Downflow applications on Combustible flooring (subbase required)	22–1/8 (562)	19 (483)	23–3/4 (603)	20–5/8 (600)
	Downflow Applications on Combustible Flooring with Coil Assembly or coil box (subbase not required)	22–1/2 (572)	19 (483)	23–1/2 (597)	20 (508)

Figure 24 Furnace, Plenum, and Subbase Installed on a Combustible Floor

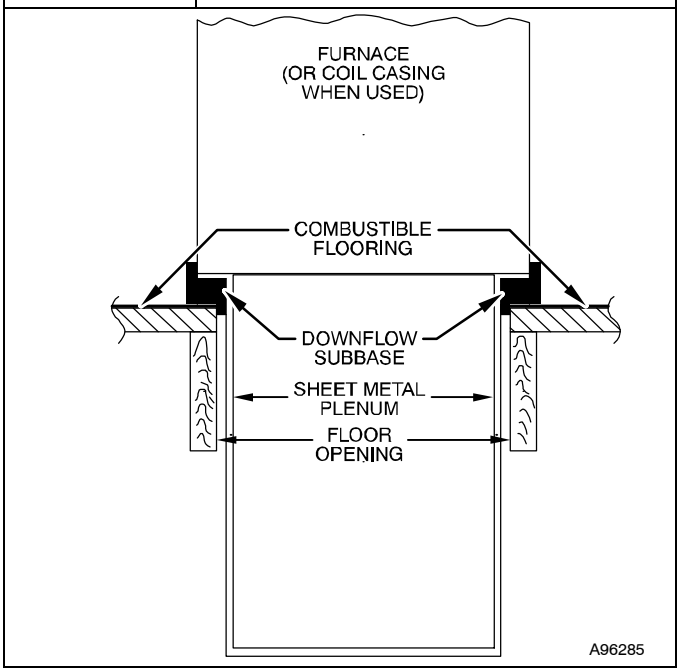

Figure 25 Furnace, Plenum, and Coil Assembly on a Combustible Floor

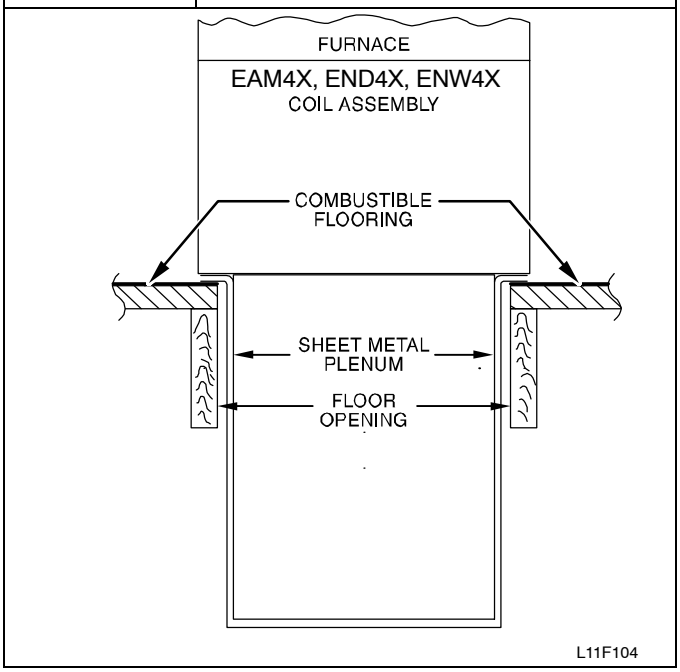

Figure 26 Suspended Furnace Installation

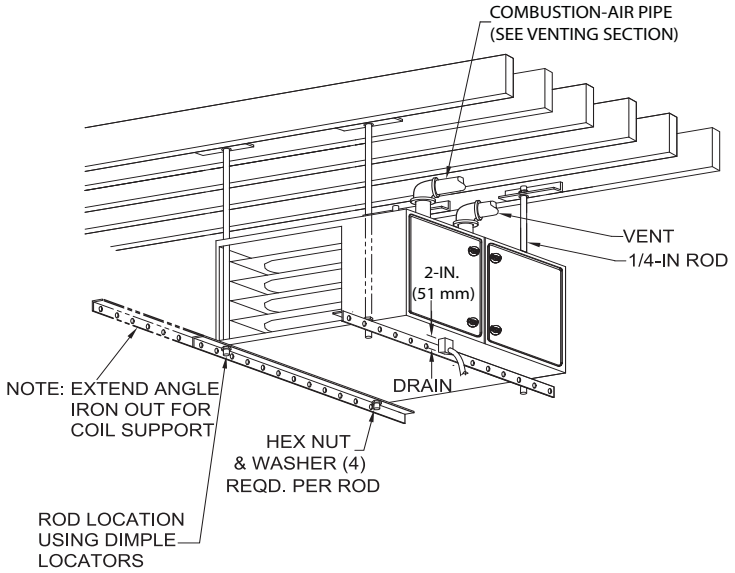

ROLLOUT PROTECTION REQUIRED

Install 12" x 22" (204 x 559 mm) sheet metal in front of and above the burner compartment area. The sheet metal MUST extend above the furnace casing by 1-in. (25 mm with the door removed. A 1-in. (25 mm) clearance minimum between top of furnace and combustible material is required. The entire length of furnace must be supported when furnace is used in horizontal position to ensure proper drainage.

NOTE: FURNACE SHOWN IS A DIRECT-VENT APPLICATION. REFER TO THE VENTING SECTION FOR ALLOWABLE VENT CONFIGURATIONS.

A150581

NOTE: Local codes may require a drain pan and condensate trap when a condensing furnace is installed over a finished ceiling.

Figure 27 Working Platform for Attic Installation

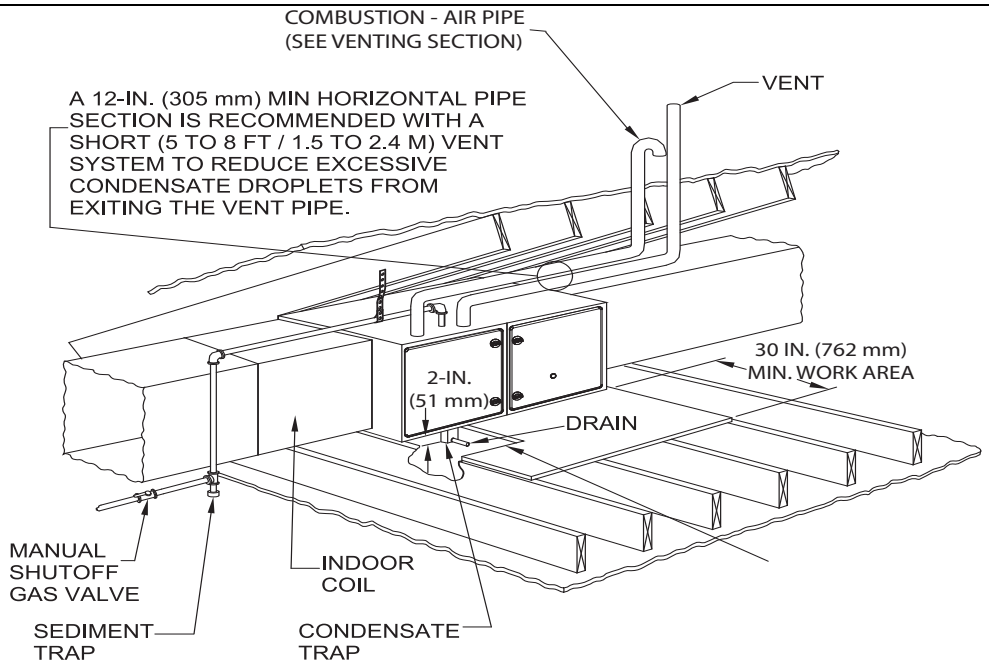

ROLLOUT PROTECTION REQUIRED

Install 12" x 22" (305x559 mm) sheet metal in front of burner compartment area. The sheet metal MUST extend underneath the furnace casing by 1-in. (25 mm) with the door removed. The bottom closure panel may be used for flame roll-out protection when bottom of furnace is used for return air connection.

NOTE: FURNACE SHOWN AS DIRECT VENT APPLICATION. REFER TO THE VENTING SECTION FOR ALLOWABLE VENT CONFIGURATIONS

A150580

NOTE: Local codes may require a drain pan and condensate trap when a condensing furnace is installed over a finished ceiling.

Roll−Out Protection

Provide a minimum 12−in. x 22−in. (305 x 559 mm) piece of sheet metal for flame roll−out protection in front of burner area for furnaces closer than 12−in. (305 mm) above the combustible deck or suspended furnaces closer than 12−in. (305mm) to joists. The sheet metal MUST extend underneath the furnace casing by 1−in. (25mm) with the door removed.

The bottom closure panel may be used for flame roll−out protection when bottom of furnace is used for return air connection. See **Figure 27** for proper orientation of roll−out shield.

Supply Air Connections

For a furnace not equipped with a cooling coil, the outlet duct shall be provided with a removable access panel. This opening shall be accessible when the furnace is installed and shall be of such a size that the heat exchanger can be viewed for possible openings using light assistance or a probe can be inserted for sampling the air stream. The cover attachment shall prevent leaks.

Connect supply−air duct to flanges on furnace supply−air outlet. Bend flange upward to 90° with wide duct pliers. (See **Figure 23**) The supply−air duct must be connected to ONLY the furnace supply−outlet−air duct flanges or air conditioning coil casing (when used). DO NOT cut main furnace casing side to attach supply air duct, humidifier, or other accessories. All supply−side accessories MUST be connected to duct external to furnace main casing.

Return Air Connections

The return−air duct may be connected to bottom of the furnace. The side of casing that faces downward may also be used for return air connection. A combination of the bottom and downward facing side may also be used. The upward facing side of the casing cannot be used as a return air connection. (See **Figure 30**)

Bottom Return Air Inlet

These furnaces are shipped with bottom closure panel installed in bottom return−air opening. Remove and discard this panel when bottom return air is used. To remove bottom closure panel, perform the following:

1. Tilt or raise furnace and remove four (4) screws holding bottom plate. (See **Figure 20**)
2. Remove bottom plate.
3. Remove bottom closure panel.
4. Reinstall bottom plate and screws.

Side Return Air Inlet

These furnaces are shipped with bottom closure panel installed in bottom return−air opening. This panel MUST be in place when side return air inlet(s) are used without a bottom return air inlet.

Not all horizontal furnaces are approved for side return air connections (See **Figure 30**)

Filter Arrangement

⚠ WARNING

FIRE, CARBON MONOXIDE AND POISONING HAZARD

Failure to follow this warning could result in personal injury, or death.

Never operate a furnace without a filter or filtration device installed. Never operate a furnace with filter or filtration device access doors removed.

Furnaces shipped without a filter rack:

There are no provisions for an internal filter in these furnaces. An external filter rack is required and is purchased separately. A field supplied accessory air cleaner may also be used in place of the filter rack.

For upflow applications, the filter can be installed on either side of the furnace, the bottom of the furnace or any combination of side and bottom of the furnace. (See **Figure 29**, **Figure 32**, and **Figure 31**)

For downflow applications, the filter rack (or field supplied accessory air cleaner) must only be connected to the bottom opening on the furnace (See **Figure 28** and **Figure 31** and **Table 9**).

For horizontal applications, the filter rack (or field supplied accessory air cleaner) can be connected to the bottom opening on the furnace. For side return use in the horizontal position, refer to **Figure 30**. If both side and bottom openings are used in **Figure 30**, each opening used will require a filter.

A filter rack or any field supplied accessory air cleaner can also be installed in the common return duct prior to entering the return air opening in any orientation.

See **Table 6** for recommended filter size details.

Table 6 Filter Size Information − in. (mm)

FURNACE CASING WIDTH	FILTER SIZE		FILTER TYPE
	SIDE RETURN	BOTTOM RETURN	
14−3/16 (360)	16 x 25 x 3/4 (406 x 635 x 19)	14 x 25 x 3/4 (356 x 635 x 19)	Washable*
17−1/2 (445)	16 x 25 x 3/4 (406 x 635 x 19)	16 x 25 x 3/4 (406 x 635 x 19)	Washable*
21 (533)	16 x 25 x 3/4 (406 x 635 x 19)	20 x 25 x 3/4 (508 x 635 x 19)	Washable*
24−1/2 (622)	16 x 25 x 3/4 (406 x 635 x 19)	24 x 25 x 3/4 (610 x 635 x 19)	Washable*

* Recommended to maintain air filter face velocity. See Product Data for part number.

Refer to the instructions supplied with the Filter Rack or accessory air filter for additional assembly and installation options.

Filter and Return Duct Sizing

Pressure drop must be taken into account when sizing filters, filter racks, IAQ devices, and associated system ductwork. See **Table 7** for a comparison of Pressure Drop (initial/clean resistance to airflow) versus Airflow for a variety of filter media types and sizes. These are representative numbers. Consult the filter or IAQ device manufacturers' specification sheet for performance data for a particular filter media or IAQ device.

Design the filter and associated ductwork for the best match of pressure drop versus filter size. Best practice usually chooses filter systems with pressure drops under 0.2 in. w.c. (50 Pa), with the best blower electrical efficiency and system airflow performance occurring with filter pressure drops under 0.1 in. w.c. (25 Pa).

Due to the relatively high pressure drops of 1-in (25 mm) thick after-market filter media, it is recommended that the filtration system be designed for at least 2-in (51 mm) thick media.

TIPS FROM CONTRACTORS: Install a media cabinet capable of incorporating a 4-in (102 mm) thick media filter. This allows room for future upgrades to other IAQ devices.

NOTICE

Design the duct system FIRST to determine how much pressure drop may be allowed in the filter system. See the AIR DUCTS section. Excessive filter pressure drop often compromises system airflow and duct performance, causes inadequate airflow to the furthest ends of the duct system, as well as causes excess noise and higher than anticipated electrical consumption.

Provide duct transitions, as required, to smoothly transition airflow from the return duct system to the filter (or IAQ device) to the furnace when the dimensions of the ductwork or furnace return air opening do not match the required filter or IAQ device dimensions. See the instructions supplied with factory-accessory duct adapters.

Table 7 Filter Media Pressure Drop (Clean) Versus Airflow - in. w.c. (Pa)

14 x 25 Filter		Factory-Accy Washable		Representative After-Market Filter Media*							
				Fiberglass*				Pleated*			
CFM	L/s	(1-in. / 2.5 cm)		(1-in. / 2.5 cm)		(2-in. / 5 cm)		(1-in. / 2.5 cm)		(2-in. / 5 cm)	
600	(283)	0.04	(12)	0.07	(17)	0.10	(26)	0.24	(60)	0.16	(40)
800	(378)	0.06	(15)	0.10	(25)	0.15	(39)	0.34	(85)	0.23	(59)
1000	(472)	0.07	(18)	0.13	(34)	0.21	(52)	-	-	0.32	(81)
1200	(566)	0.08	(20)	0.17	(43)	0.27	(68)	-	-	-	-

16x 25 Filter		Factory-Accy Washable		Representative After-Market Filter Media*							
				Fiberglass*				Pleated*			
CFM	L/s	(1-in. / 2.5 cm)		(1-in. / 2.5 cm)		(2-in. / 5 cm)		(1-in. / 2.5 cm)		(2-in. / 5 cm)	
600	(283)	0.04	(10)	0.06	(15)	0.09	(22)	0.20	(51)	0.13	(34)
800	(378)	0.05	(13)	0.08	(21)	0.13	(32)	0.29	(72)	0.20	(49)
1000	(472)	0.06	(16)	0.11	(28)	0.17	(43)	-	-	0.27	(67)
1200	(566)	0.07	(18)	0.14	(36)	0.22	(56)	-	-	-	-
1400	(661)	0.08	(21)	0.18	(45)	0.28	(70)	-	-	-	-
1600	(755)	0.09	(23)	0.21	(54)	-	-	-	-	-	-
1800	(850)	0.10	(25)	0.26	(64)	-	-	-	-	-	-

20 x 25 Filter		Factory-Accy Washable		Representative After-Market Filter Media*							
				Fiberglass*				Pleated*			
CFM	(L/s)	(1-in. / 2.5 cm)		(1-in. / 2.5 cm)		(2-in. / 5 cm)		(1-in. / 2.5 cm)		(2-in. / 5 cm)	
800	(378)	0.04	(11)	0.06	(16)	0.09	(24)	0.22	(55)	0.15	(37)
1000	(472)	0.05	(13)	0.08	(21)	0.13	(32)	0.29	(72)	0.20	(49)
1200	(566)	0.06	(15)	0.11	(27)	0.16	(41)	-	-	0.25	(63)
1400	(661)	0.07	(17)	0.13	(33)	0.20	(51)	-	-	0.31	(79)
1600	(755)	0.08	(19)	0.16	(40)	0.24	(61)	-	-	-	-
1800	(850)	0.08	(21)	0.18	(47)	0.29	(73)	-	-	-	-
2000	(944)	0.09	(23)	0.21	(54)	-	-	-	-	-	-
2200	(1038)	0.09	(24)	0.25	(62)	-	-	-	-	-	-

25 x 25 Filter		Factory-Accy Washable		Representative After-Market Filter Media*							
				Fiberglass*				Pleated*			
CFM	L/s	(1-in. / 2.5 cm)		(1-in. / 2.5 cm)		(2-in. / 5 cm)		(1-in. / 2.5 cm)		(2-in. / 5 cm)	
800	(378)	0.03	(9)	0.05	(12)	0.07	(18)	0.17	(43)	0.11	(28)
1000	(472)	0.04	(11)	0.06	(16)	0.09	(24)	0.22	(55)	0.15	(37)
1200	(566)	0.05	(13)	0.08	(20)	0.12	(31)	0.27	(68)	0.18	(47)
1400	(661)	0.06	(15)	0.10	(24)	0.15	(38)	-	-	0.23	(58)
1600	(755)	0.06	(16)	0.11	(29)	0.18	(45)	-	-	0.28	(69)
1800	(850)	0.07	(18)	0.13	(34)	0.21	(53)	-	-	-	-
2000	(944)	0.08	(19)	0.16	(39)	0.24	(61)	-	-	-	-
2200	(1038)	0.08	(21)	0.18	(45)	0.28	(70)	-	-	-	-

* Representative estimates from filter manufacturer data sheets.
See manufacturers' specifications for pressure drop versus airflow data for specific filter media.

If the filter size that you are looking for is not contained in **Table 7**, refer to **Table 8** for a comparison of Pressure Drop (initial/clean resistance to airflow) versus Face Velocity for a variety of filter media types.

The following equations relate Face Velocity (FPM), Filter Area and Airflow (CFM):

Filter Face Velocity = Airflow / Filter Area

Minimum Filter Area = Rated System Airflow / Maximum Filter Face Velocity

Table 8 Filter Media Pressure Drop (Clean) Versus Velocity - in. w.c. (Pa)

Face Velocity		Factory-Accy Washable		Representative After-Market Filter Media*							
				Fiberglass*				Pleated*			
FPM	**(m/s)**	**(1-in. / 2.5 cm)**		**(1-in. / 2.5 cm)**		**(2-in. / 5 cm)**		**(1-in. / 2.5 cm)**		**(2-in. / 5 cm)**	
200	(1)	0.04	(10)	0.05	(13)	0.08	(20)	0.18	(47)	0.12	(31)
300	(1.5)	0.05	(14)	0.09	(22)	0.13	(34)	0.30	(75)	0.21	(52)
400	(2)	0.07	(17)	0.13	(32)	0.20	(50)	-	-	0.31	(78)
500	(2.5)	0.08	(21)	0.18	(44)	0.27	(69)	-	-	-	-
600	(3)	0.09	(23)	0.23	-	-	-	-	-	-	-
700	(3.6)	0.10	(26)	0.29	-	-	-	-	-	-	-

* Representative estimates from filter manufacturer data sheets.
See manufacturers' specifications for pressure drop versus airflow data for specific filter media.

Figure 28 Downflow Return Air Configurations and Restrictions

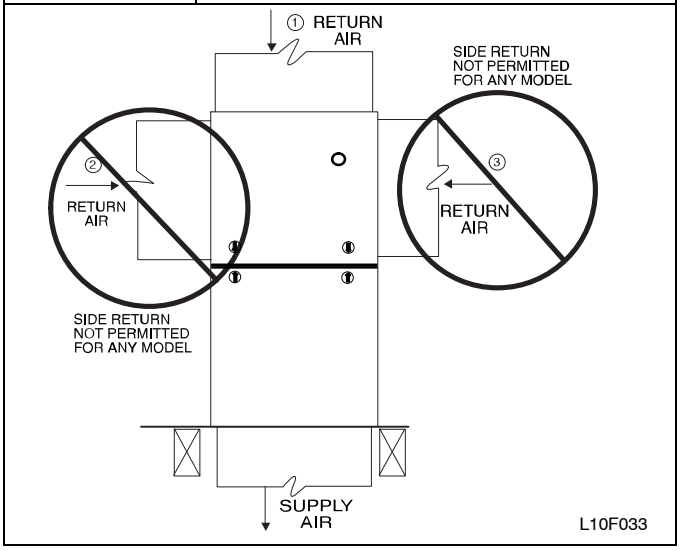

Figure 29 Upflow Return Air Configurations and Restrictions

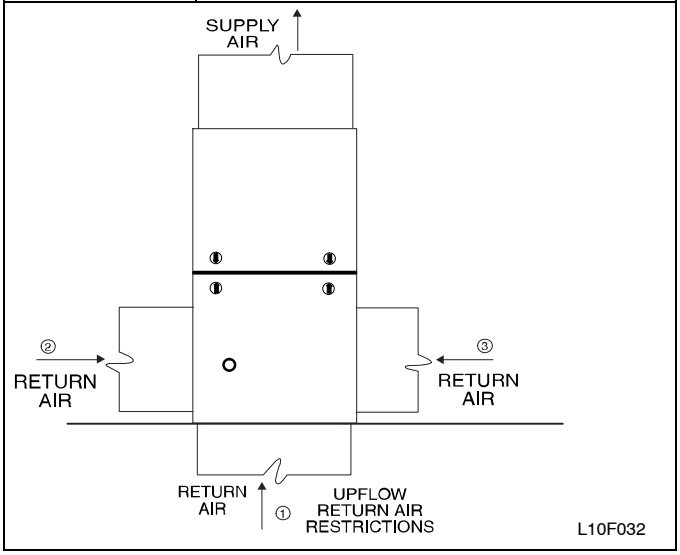

Figure 30 Horizontal Return Air Configurations and Restrictions

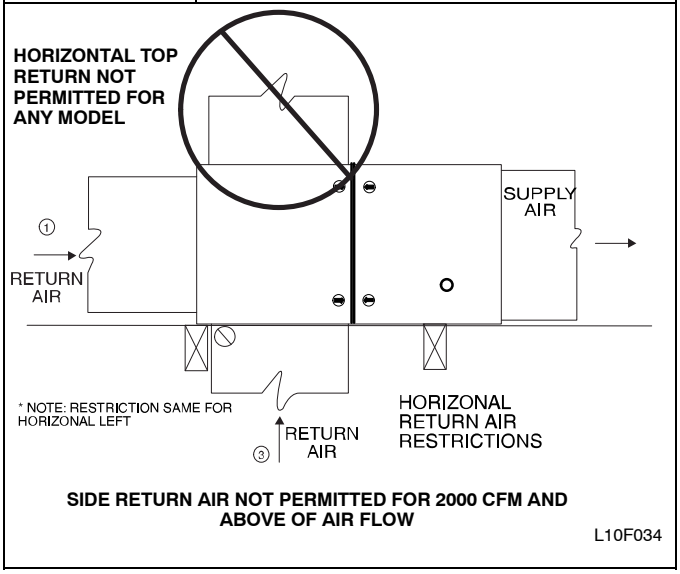

External Filter Cabinet Configurations

Figure 31 Accessory Bottom Filter Rack

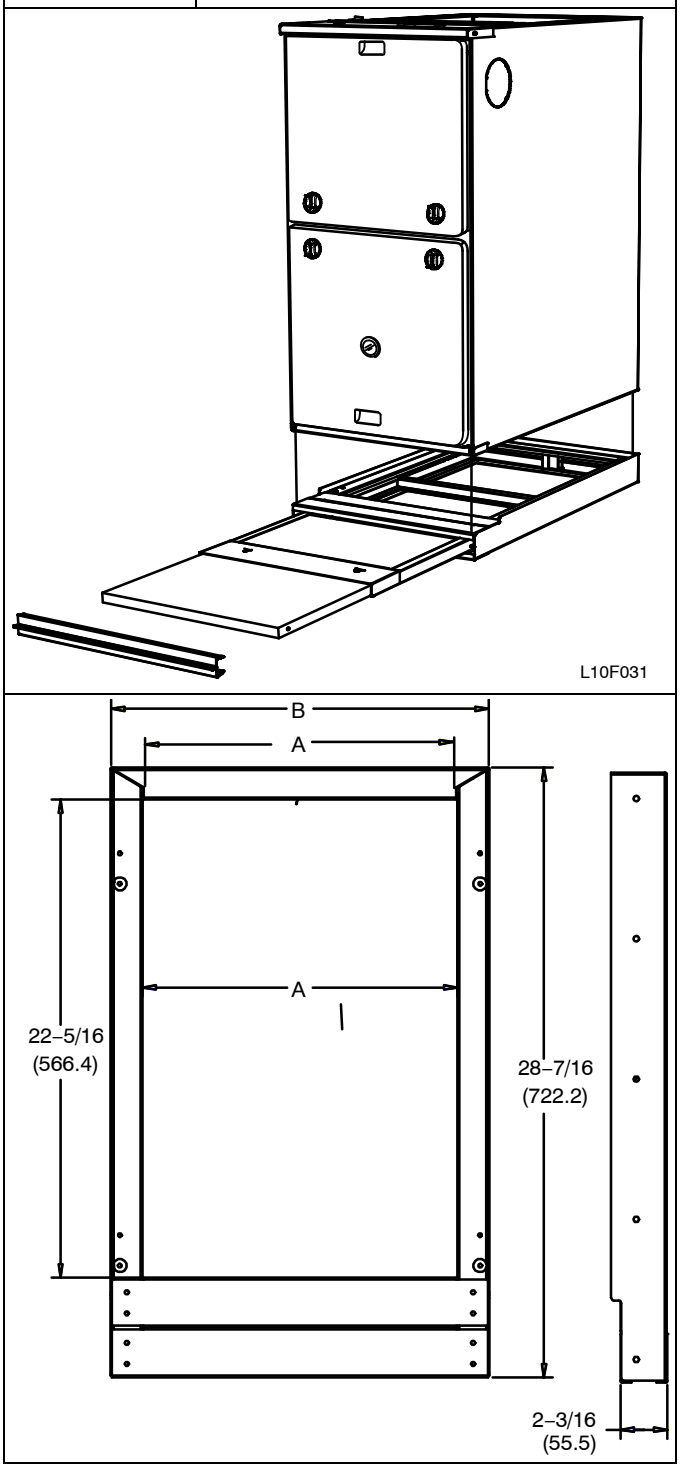

Table 9 Dimensional Drawing – in. (mm)

KIT NO.	FURNACE WIDTH	A	B
NAHB00501FF	14–3/16 (360.4)	11–3/8 (289)	14–1/4 (362)
NAHB00601FF	17–1/2 (444.5)	14–5/8 (371.5)	17–5/8 (447.7)
NAHB00701FF	21 (533.4)	18–1/8 (460.4)	21–1/8 (536.6)
NAHB00801FF	24–1/2 (622.3)	21–5/8 (549.3)	24–5/8 (625.5)

Figure 32 **Accessory Side Filter Rack**

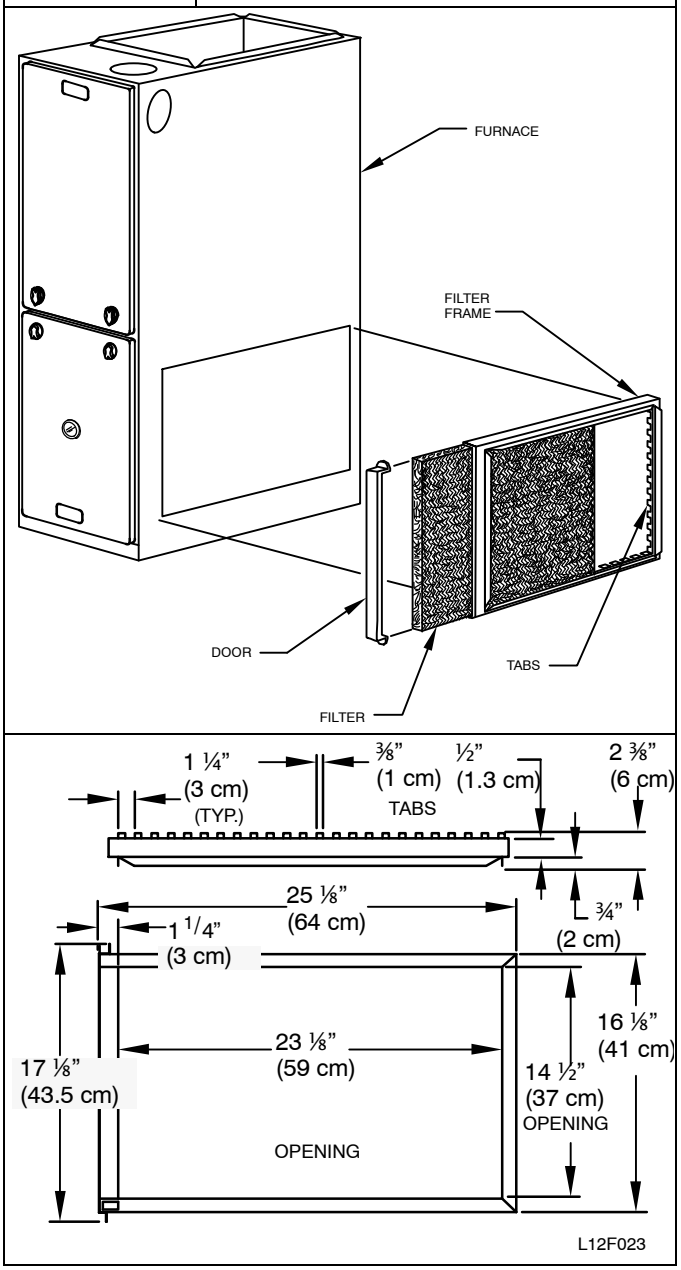

Air Ducts

NOTICE

Many states, provinces and localities are considering or have implemented standards and/or restrictions on duct sizing practices, ductwork leakage, and/or ductwork thermal, airflow and electrical efficiencies. CONSULT LOCAL CODE OFFICIALS for ductwork design and performance requirements in your area.

General Requirements

The duct system should be designed and sized according to accepted national standards such as those published by: Air Conditioning Contractors Association (ACCA Manual D), Sheet Metal and Air Conditioning Contractors National Association (SMACNA) or American Society of Heating, Refrigerating and Air Conditioning Engineers (ASHRAE) or consult *The Air Systems Design Guidelines* reference tables available from your local distributor. The duct system should be sized to handle the required system design CFM at the design external static pressure. The furnace airflow rates are provided in the **Service and Technical Support Manual**. When a furnace is installed so that the supply ducts carry air circulated by the furnace to areas outside the space containing the furnace, the return air shall also be handled by duct(s) sealed to the furnace casing and terminating outside the space containing the furnace.

Secure ductwork with proper fasteners for type of ductwork used. Seal supply– and return–duct connections to furnace with code approved tape or duct sealer.

NOTE: Flexible connections should be used between ductwork and furnace to prevent transmission of vibration.

Ductwork passing through unconditioned space should be insulated to enhance system performance. When air conditioning is used, a vapor barrier is recommended.

Maintain a 1–in. (25 mm) clearance from combustible materials to supply air ductwork for a distance of 36–in. (914 mm) horizontally from the furnace. See current edition of NFPA 90B or local code for further requirements.

Return Duct Sizing

Refer to the Filter Selection and Duct Sizing section for information on the proper selection of filter sizes and the associated ductwork and duct transitions. Improperly designed filtering systems and return ductwork are the most common causes of airflow and/or noise complaints in HVAC systems.

Ductwork Acoustical Treatment

NOTE: Metal duct systems that do not have a 90 degree elbow and 10 ft. (3 M) of main duct to the first branch take–off may require internal acoustical lining. As an alternative, fibrous ductwork may be used if constructed and installed in accordance with the latest edition of SMACNA construction standard on fibrous glass ducts. Both acoustical lining and fibrous ductwork shall comply with current edition of NFPA 90B as tested by UL Standard 181 for Class 1 Rigid air ducts.

NOTE: For horizontal applications, the top most flange may be bent past 90° to allow the evaporator coil to hang on the flange temporarily while the remaining attachment and sealing of the coil are performed.

GAS PIPING

⚠ WARNING

FIRE OR EXPLOSION HAZARD

Failure to follow this warning could result in personal injury, death, and/or property damage.

Never purge a gas line into a combustion chamber. Never test for gas leaks with an open flame. Use a commercially available soap solution made specifically for the detection of leaks to check all connections. A fire or explosion may result causing property damage, personal injury or loss of life.

⚠ WARNING

FIRE OR EXPLOSION HAZARD

Failure to follow this warning could result in personal injury, death, and/or property damage.

Use proper length of pipe to avoid stress on gas control manifold and a gas leak.

⚠ WARNING

FIRE OR EXPLOSION HAZARD

Failure to follow this warning could result in personal injury, death, and/or property damage.

Gas valve inlet and/or inlet pipe must remain capped until gas supply line is permanently installed to protect the valve from moisture and debris. Also, install a sediment trap in the gas supply piping at the inlet to the gas valve.

Gas piping must be installed in accordance with national and local codes. Refer to current edition of NFGC in the U.S.A. Refer to current edition of CAN/CSA B149.1 in Canada.

Installations must be made in accordance with all authorities having jurisdiction. If possible, the gas supply line should be a separate line running directly from meter to furnace.

NOTE: Use a back–up wrench on the inlet of the gas valve when connecting the gas line to the gas valve.

NOTICE

In the state of Massachusetts:

1. Gas supply connections MUST be performed by a licensed plumber or gas fitter.
2. When flexible connectors are used, the maximum length shall not exceed 36–in. (915 mm).
3. When lever handle type manual equipment shutoff valves are used, they shall be T–handle valves.
4. The use of copper tubing for gas piping is NOT approved by the state of Massachusetts.

Refer to **Table 10** for recommended gas pipe sizing. Risers must be used to connect to furnace and to meter. Support all gas piping with appropriate straps, hangers, etc. Use a minimum of one hanger every 6 ft. (1.8 M). Joint compound (pipe dope) should be applied sparingly and only to male threads of joints. Pipe dope must be resistant to the action of propane gas.

⚠ WARNING

FIRE OR EXPLOSION HAZARD

A failure to follow this warning could result in personal injury, death, and/or property damage.

If local codes allow the use of a flexible gas appliance connector, always use a new listed connector. Do not use a connector which has previously served another gas appliance. Black iron pipe shall be installed at the furnace gas control valve and extend a minimum of 2–in. (51 mm) outside the furnace.

⚠ CAUTION

FURNACE DAMAGE HAZARD

Failure to follow this caution may result in furnace damage.

Connect gas pipe to furnace using a backup wrench to avoid damaging gas controls and burner misalignment.

Table 10 Maximum Capacity of Pipe

NOMINAL IRON PIPE SIZE IN. (MM)	INTERNAL DIA. IN. (MM)	LENGTH OF PIPE – FT (M)				
		10 (3.0)	20 (6.0)	30 (9.1)	40 (12.1)	50 (15.2)
1/2 (13)	0.622 (158)	175	120	97	82	73
3/4 (19)	0.824 (20.9)	360	250	200	170	151
1 (25)	1.049 (26.6)	680	465	375	320	285
1-1/4 (32)	1.380 (35.0)	1400	950	770	660	580
1-1/2 (39)	1.610 (40.9)	2100	1460	1180	990	900

* Cubic ft of gas per hr for gas pressures of 0.5 psig (14−in. w.c.) or less and a pressure drop of 0.5−in. w.c. (based on a 0.60 specific gravity gas). Ref: **Table 10 above,** and 6.2 of current edition of NFPA54/ANSI Z223.1.

An accessible manual equipment shutoff valve MUST be installed external to furnace casing and within 6 ft. (1.8 M) of furnace.

Install a sediment trap in riser leading to furnace as shown in **Figure 33**. Connect a capped nipple into lower end of tee. Capped nipple should extend below level of furnace gas controls. Place a ground joint union between furnace gas control valve and exterior manual equipment gas shutoff valve.

Figure 33 Typical Gas Pipe Arrangement

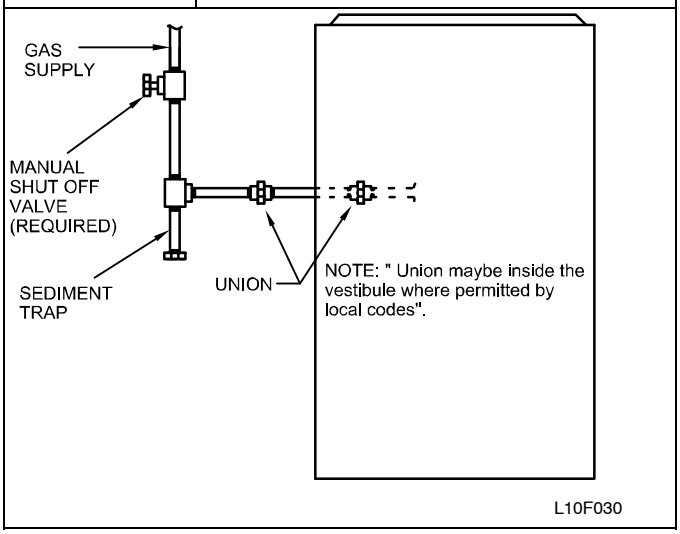

A 1/8–in. (3 mm) NPT plugged tapping, accessible for test gauge connection, MUST be installed immediately upstream of gas supply connection to furnace and downstream of manual equipment shutoff valve.

Piping should be pressure and leak tested in accordance with the current addition of the NFGC in the United States, local, and national plumbing and gas codes before the furnace has been connected. Refer to current edition of NSCNGPIC in Canada. After all connections have been made, purge lines and check for leakage at furnace prior to operating furnace.

NOTE: The furnace gas control valve inlet pressure tap connection is suitable to use as test gauge connection providing test pressure DOES NOT exceed maximum 0.5 psig (14–in. w.c.) stated on gas control valve. (See **Figure 34**)

Figure 34 **Redundant Automatic Gas Valve (Two−Stage)**

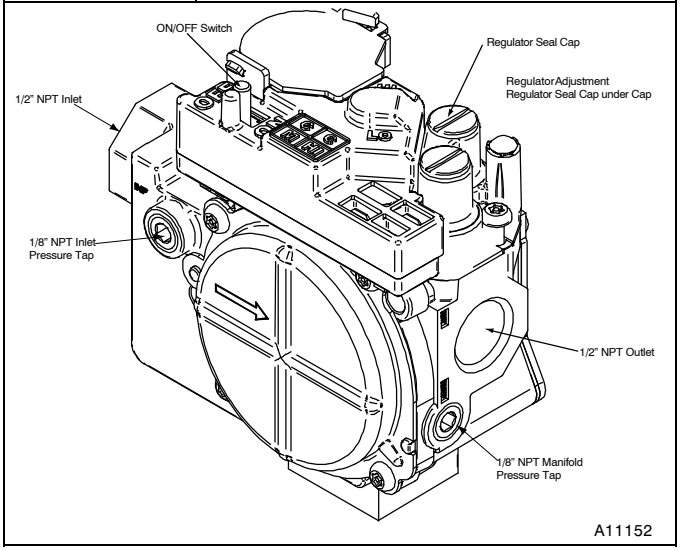

If pressure exceeds 0.5 psig (14−in. w.c.), gas supply pipe must be disconnected from furnace and capped before and during supply pipe pressure test. If test pressure is equal to or less than 0.5 psig (14−in. w.c.), turn off electric shutoff switch located on furnace gas control valve and accessible manual equipment shutoff valve before and during supply pipe pressure test. After all connections have been made, purge lines and check for leakage at furnace prior to operating furnace.

The gas supply pressure shall be within the maximum and minimum inlet supply pressures marked on the rating plate with the furnace burners ON and OFF.

Some installations require gas entry on right side of furnace (as viewed in upflow). (See **Figure 35**)

Gas Pipe Grommet

For direct vent (2-pipe) applications, the knockout for the gas pipe must be sealed to prevent air leakage. Remove the knockout, install the grommet in the knockout, then insert the gas pipe. The grommet is included in the loose parts bag. (See **Figure 35**)

Figure 35 **Gas Entry**

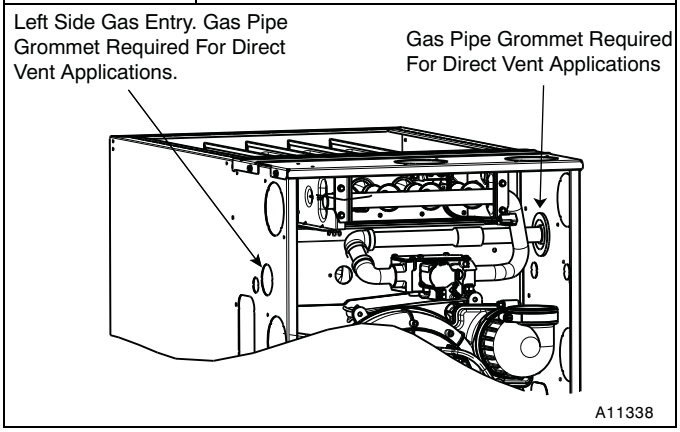

ELECTRICAL CONNECTIONS

⚠ WARNING

ELECTRICAL SHOCK, FIRE OR EXPLOSION HAZARD

Failure to follow safety warnings could result in dangerous operation, serious injury, death or property damage.

Improper servicing could result in dangerous operation, serious injury, death or property damage.

- Before servicing, disconnect all electrical power to furnace.
- When servicing controls, label all wires prior to disconnecting. Reconnect wires correctly.
- Verify proper operation after servicing.

⚠ WARNING

ELECTRICAL SHOCK HAZARD

Failure to follow this warning could result in personal injury or death.

Blower door switch opens 115−v power to control. No component operation can occur. Do not bypass or close switch with blower door removed.

See **Figure 36** for field wiring diagram showing typical field 115−v wiring. Check all factory and field electrical connections for tightness.

Field−supplied wiring shall conform with the limitations of 63°F (33°C) rise.

⚠ WARNING

ELECTRICAL SHOCK AND FIRE HAZARD

Failure to follow this warning could result in personal injury, death, or property damage.

The cabinet MUST have an uninterrupted or unbroken ground according to the current edition of the NEC NFPA 70 or local codes to minimize personal injury if an electrical fault should occur. In Canada, refer to current edition of the Canadian Electrical Code CSA C22.1. This may consist of electrical wire, conduit approved for electrical ground or a listed, grounded power cord (where permitted by local code) when installed in accordance with existing electrical codes. Refer to the power cord manufacturer's ratings for proper wire gauge.

Do not use gas piping as an electrical ground.

⚠ CAUTION

FURNACE MAY NOT OPERATE HAZARD

Failure to follow this caution may result in intermittent furnace operation.

Furnace control must be grounded for proper operation or else control will lock out. Control must remain grounded through green/yellow wire routed to gas valve and manifold bracket screw.

115−V Wiring

Furnace must have a 115-v power supply properly connected and grounded.

NOTE: Proper polarity must be maintained for 115-v wiring. If polarity is incorrect, control status indicator light flashes rapidly and furnace does **NOT** operate.

Verify that the voltage, frequency, and phase correspond to that specified on unit rating plate. Also, check to be sure that service provided by utility is sufficient to handle load imposed

by this equipment. Refer to rating plate or **Table 11** for equipment electrical specifications.

U.S.A. Installations: Make all electrical connections in accordance with the current edition of the National Electrical Code (NEC) NFPA 70 and any local codes or ordinances that might apply.

Canadian Installations: Make all electrical connections in accordance with the current edition of the Canadian Electrical Code CSA C22.1 and any local codes or ordinances that might apply.

WARNING

FIRE HAZARD
Failure to follow this warning could result in personal injury, death, or property damage.
Do not connect aluminum wire between disconnect switch and furnace. Use only copper wire.

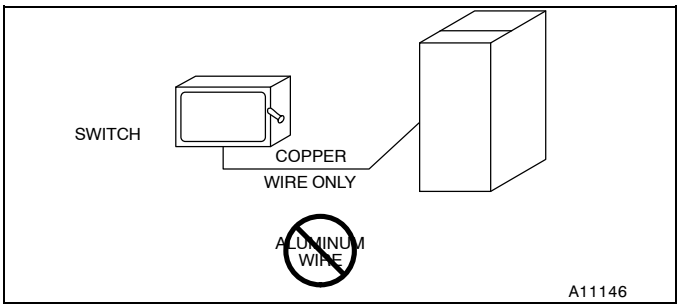

Use a separate, fused branch electrical circuit with a properly sized fuse or circuit breaker for this furnace. See **Table 11** for wire size and fuse specifications. A readily accessible means of electrical disconnect must be located within sight of the furnace.

Figure 36 **Heating and Cooling Application Two–Stage Wiring Diagram with Single–Stage Thermostat**

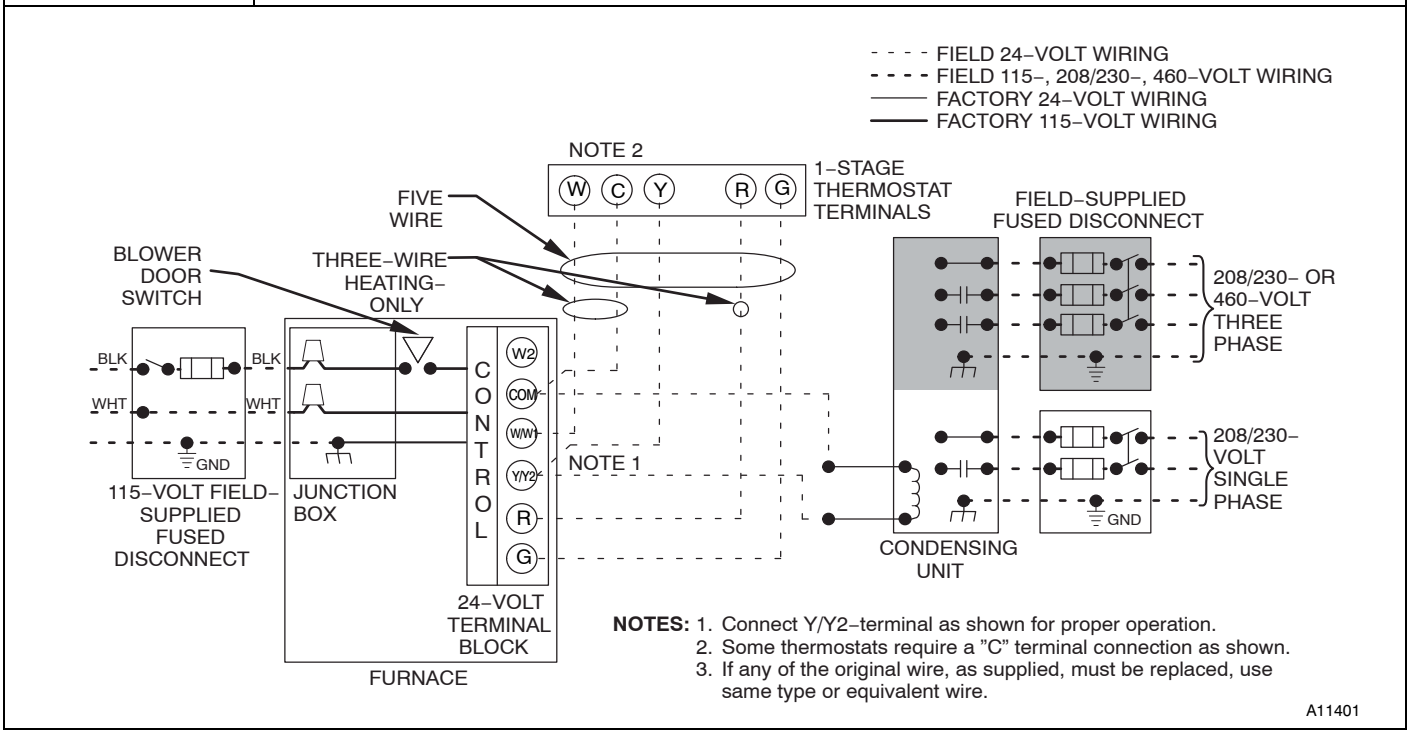

J–Box Installation

WARNING

FIRE OR ELECTRICAL SHOCK HAZARD
Failure to follow this warning could result in personal injury, death, or property damage.
If field–supplied manual disconnect switch is to be mounted on furnace casing side, select a location where a drill or fastener cannot damage electrical or gas components.

The J-Box is used when field line voltage electrical connections are made to the furnace wiring harness inside the furnace casing. The J-Box is not required if a field-supplied electrical box is attached to the outside of the furnace casing and the box is grounded to the green ground wire of the main wiring harness and the earth ground of the field electrical supply.

The J–Box cover, mounting bracket and screws are shipped in the loose parts bag included with the furnace. The J–Box can be mounted on the left or right side of the casing, as viewed from the upflow position. (See **Figure 37**)

Figure 37 Optional J−Box Locations

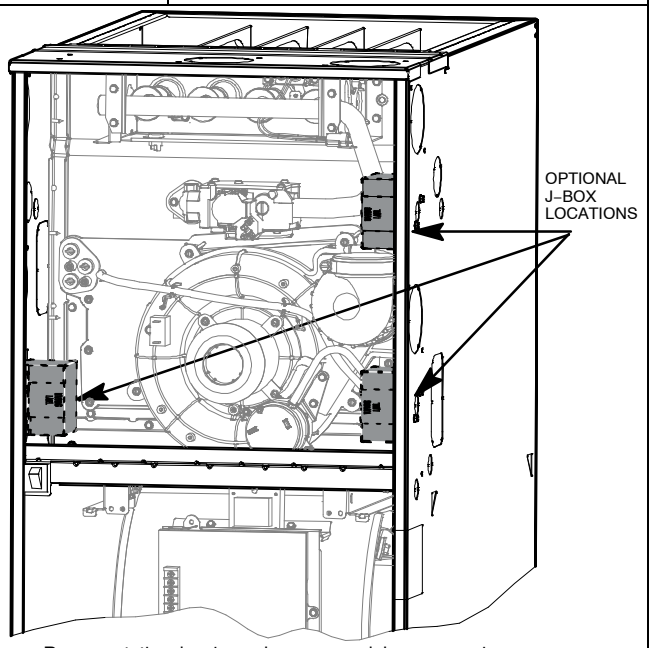

Representative drawing only, some models may vary in appearance.

L12F024

Figure 38 J−Box Bracket Installation

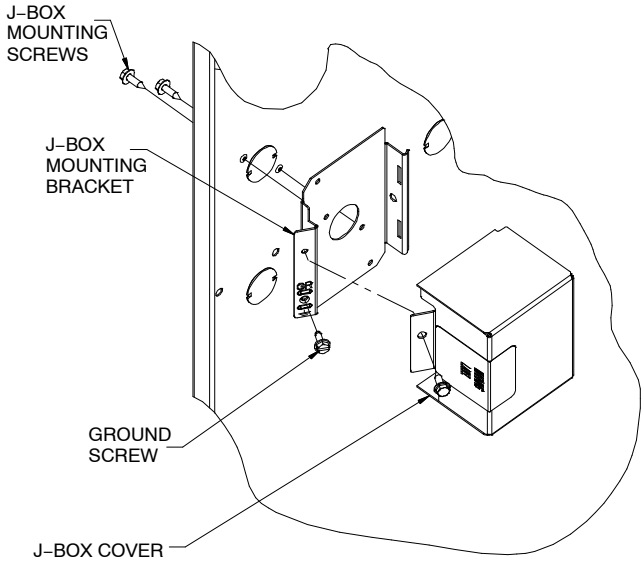

L12F025

Remove the J−Box cover and mounting bracket from the loose parts bag. Select a 7/8−in. (22 mm) knock-out on the desired side of the casing. Remove the knock-out from the casing. Drill two 1/8−in. (3 mm) pilot holes in the casing dimples by the desired 7/8−in. (22 mm) knock-out.

Align the J−Box mounting bracket against the inside of the casing and secure the mounting bracket with the screws. (See **Figure 38**)

Electrical Box on Furnace Casing Side

NOTE: Check that duct on side of furnace will not interfere with installed electrical box.

1. Fasten a field-supplied external electrical box to the outside of the casing by driving two field-supplied screws from inside electrical box into casing. (See **Figure 39**)
2. Route field power wiring into external electrical box.
3. Pull furnace power wires through 1/2-in. (12 mm) diameter hole in J−Box. If necessary, loosen power wires from strain−relief wire-tie on furnace wiring harness.
4. Connect any code required external disconnect(s) to field power wiring.
5. Route external field power wires through holes in electrical box and casing.
6. Connect field ground wire and factory ground wire to green ground screw on J−Box mounting bracket as shown in **Figure 38**.
7. Connect field power and neutral leads to furnace power leads. as shown in **Figure 36**.
8. Attach furnace J−Box cover to mounting bracket with screws supplied in loose parts bag. Do not pinch wires between cover and bracket.
9. Complete external disconnect wiring and installation. Connect line voltage leads as shown in **Figure 39**. Use best practices (NEC) NFPA 70 in U.S.A. for wire bushings, strain relief, etc., and Canadian Electrical Code CSA C22.1.

Figure 39 Field−Supplied Electrical Box on Furnace Casing

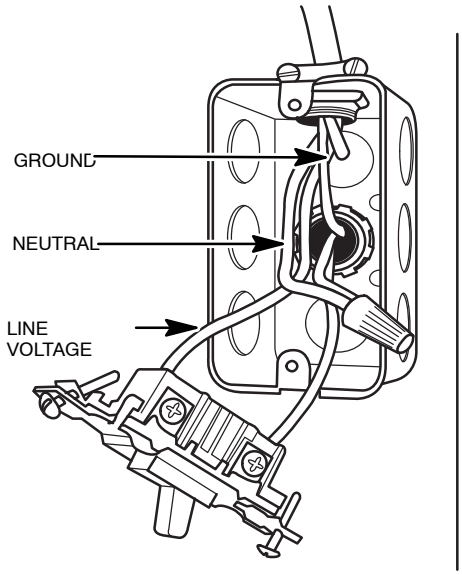

A10141

Power Cord Installation in Furnace J−Box

NOTE: Power cords must be able to handle the electrical requirements listed in **Table 11**. Refer to power cord manufacturer's listings.

1. Install J−Box mounting bracket to inside of furnace casing. (See **Figure 38**)
2. Route listed power cord through 7/8−in. (22 mm) diameter hole in casing and J−Box bracket.
3. Secure power cord to J−Box bracket with a strain relief bushing or a connector approved for the type of cord used.
4. Pull furnace power wires through 1/2−in. (12 mm) diameter hole in J−Box. If necessary, loosen power wires from strain—relief wire−tie on furnace wiring harness.
5. Connect field ground wire and factory ground wire to green ground screw on J−Box mounting bracket as shown in **Figure 38.**
6. Connect power cord power and neutral leads to furnace power leads as shown in **Figure 36**.
7. Attach furnace J−Box cover to mounting bracket with screws supplied in loose parts bag. Do not pinch wires between cover and bracket.

BX Cable Installation in Furnace J−Box

1. Install J−Box mounting bracket to inside of furnace casing.
2. Route BX connector through 7/8−in. (22 mm) diameter hole in casing and J−Box bracket.
3. Secure BX cable to J−Box bracket with connectors approved for the type of cable used.
4. Connect field ground wire and factory ground wire to green ground screw on J−Box mounting bracket as shown in **Figure 38**.
5. Connect field power and neutral leads to furnace power leads. as shown in **Figure 36**.
6. Attach furnace J−Box cover to mounting bracket with screws supplied in loose parts bag. Do not pinch wires between cover and bracket.

⚠ WARNING

FIRE, EXPLOSION, ELECTRICAL SHOCK, AND CARBON MONOXIDE POISONING HAZARD

Failure to follow this warning could result in dangerous operation, personal injury, death, or property damage.

Do no drill into blower shelf of furnace to route control wiring. Route any control or accessory wiring to the blower compartment through external knockouts on the casing.

24−V Wiring

Make field 24−v connections at the 24−v terminal strip. (See **Figure 41**) Connect terminal Y/Y2 as shown in **Figure 36** for proper cooling operation. Use only AWG No. 18, color−coded, copper thermostat wire.

NOTE: Use AWG No. 18 color-coded copper thermostat wire for lengths up to 100 ft. (30.5 M). For wire lengths over 100 ft., use AWG No. 16 wire.

The 24−v circuit contains an automotive−type, 3−amp. fuse located on the control. Any direct shorts during installation, service, or maintenance could cause this fuse to blow. If fuse replacement is required, use ONLY a 3−amp. fuse of identical size. (See **Figure 41**)

See the Service and Technical Support manual for detailed instructions on control wiring and setup.

Thermostats and Control Settings

Communicating, single−stage and two−stage thermostats may all be used with this furnaces. Refer to typical thermostat wiring diagrams and the Sequence of Operation section of the Service and Technical Support manual for details on configuring the furnace control board. Consult the thermostat installation instructions for specific information about configuring the thermostat.

Accessories (See **Figure 40** and **Figure 41**)

1. Electronic Air Cleaner (EAC)
   Connect an accessory Electronic Air Cleaner (if used) using 1/4−in female quick connect terminals to the two male 1/4−in quick−connect terminals on the control board marked EAC−1 and EAC−2. The terminals are rated for 115VAC, 1.0 amps maximum and are energized during blower motor operation.
2. Humidifier (HUM)
   The HUM terminal is a 24 VAC output, energized when the blower is operating during a call for heat. (See **Figure 41**)
3. Communication Connector
   This connection is used when the furnace is controlled by an optional communicating wall control instead of a standard thermostat. The communication plug is supplied with the communicating wall control. Refer to the instructions supplied with the communicating wall control for complete details. (See **Figure 41**)
4. Outside Air Thermistor (OAT)
   The OAT connection is used in conjunction with communicating wall control. It is not required when the furnace is controlled by a standard type thermostat. Refer to the instructions supplied with the communicating wall control for complete details. (See **Figure 41**)

Alternate Power Supplies

This furnace is designed to operate on a utility generated power which has a smooth sinusoidal waveform. If the furnace is to be operated on a generator or other alternate power supply, the alternate power supply must produce a smooth sinusoidal waveform for compatibility with furnace electronics. The alternate power supply must generate the same voltage, phase, and frequency (Hz) as shown in **Table 11** or on the furnace rating plate.

Power from an alternate power supply that non-sinusoidal may damage the furnace or cause erratic furnace operation.

Contact the alternate power supply manufacturer for specifications and details.

Table 11 Electrical Data

TWO−STAGE, VARIABLE SPEED FURNACES									
UNIT SIZE	VOLTS−HERTZ−PHASE	OPERATING VOLTAGE RANGE*		MAXIMUM UNIT AMPS	UNIT AMPACITY#	MINIMUM WIRE SIZE AWG	MAXIMUM WIRE LENGTH FT (M)‡		MAXIMUM FUSE OR CKT BKR AMPS†
		Max*	Min*						
0401410	115−60−1	127	104	7.5	10.3	14	36	(11.0)	15
0401712	115−60−1	127	104	7.5	10.2	14	36	(11.0)	15
0601412	115−60−1	127	104	7.6	10.3	14	36	(11.0)	15
0601714	115−60−1	127	104	10.9	14.5	14	25	(7.6)	15
0801716	115−60−1	127	104	10.9	14.5	14	25	(7.6)	15
0802120[1]	115−60−1	127	104	14.7/11.3	19.3/14.9	12/14	29/24	(8.8/7.3)	20/15
1002120[1]	115−60−1	127	104	14.8/11.3	19.4/15.0	12/14	29/24	(8.8/7.3)	20/15
1202422[1]	115−60−1	127	104	14.8/11.3	19.4/15.0	12/14	29/24	(8.8/7.3)	20/15

* Permissible limits of the voltage range at which the unit operates satisfactorily.

\# Unit ampacity = 125 percent of largest operating component's full load amps plus 100 percent of all other potential operating components' (EAC, humidifier, etc.) full load amps.

† Time−delay type is recommended.

‡ Length shown is as measured one way along wire path between unit and service panel for maximum 2 percent voltage drop.

1 Low Amp Kit, part number NAHA00101PC (allowed on 'A4' series or greater), allows select furnaces to be installed with a 15 Amp Breaker and 14 AWG wire within the listed wire length. Affected data shown as Default Value/Value with Lower Amp Kit.

Figure 40 **Isolation Relay for Humidifiers with Internal Power Supply**

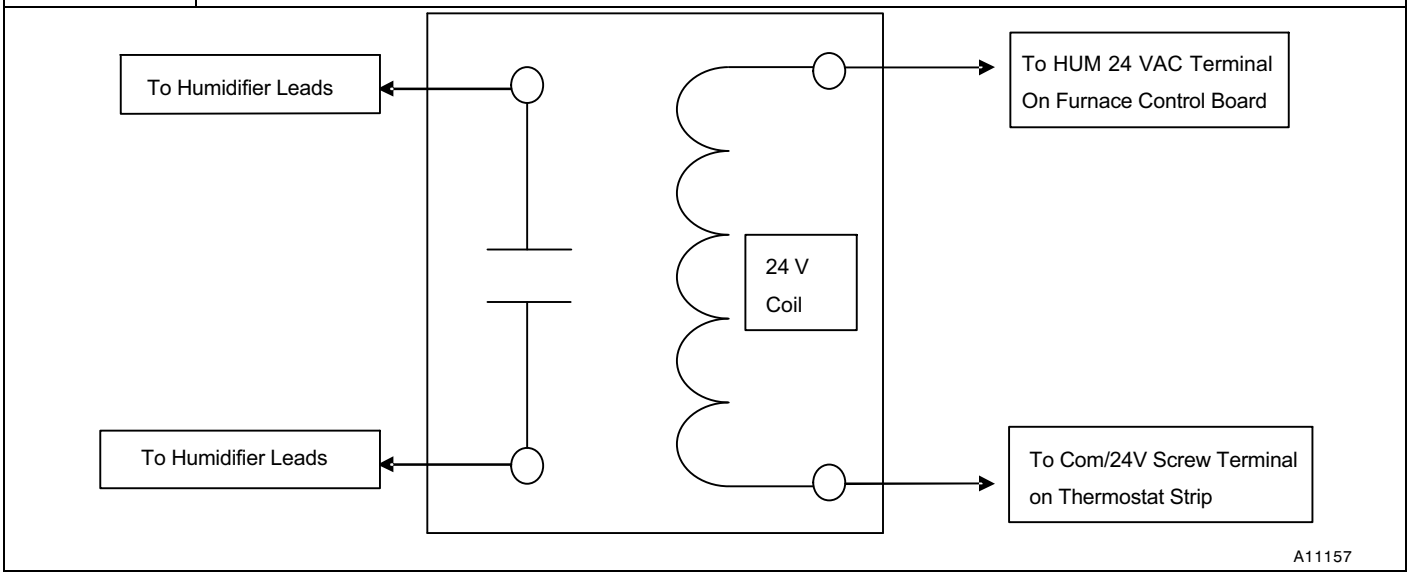

Figure 41 **Example of Variable Speed Furnace Control for Variable Speed ECM Blower Motor**

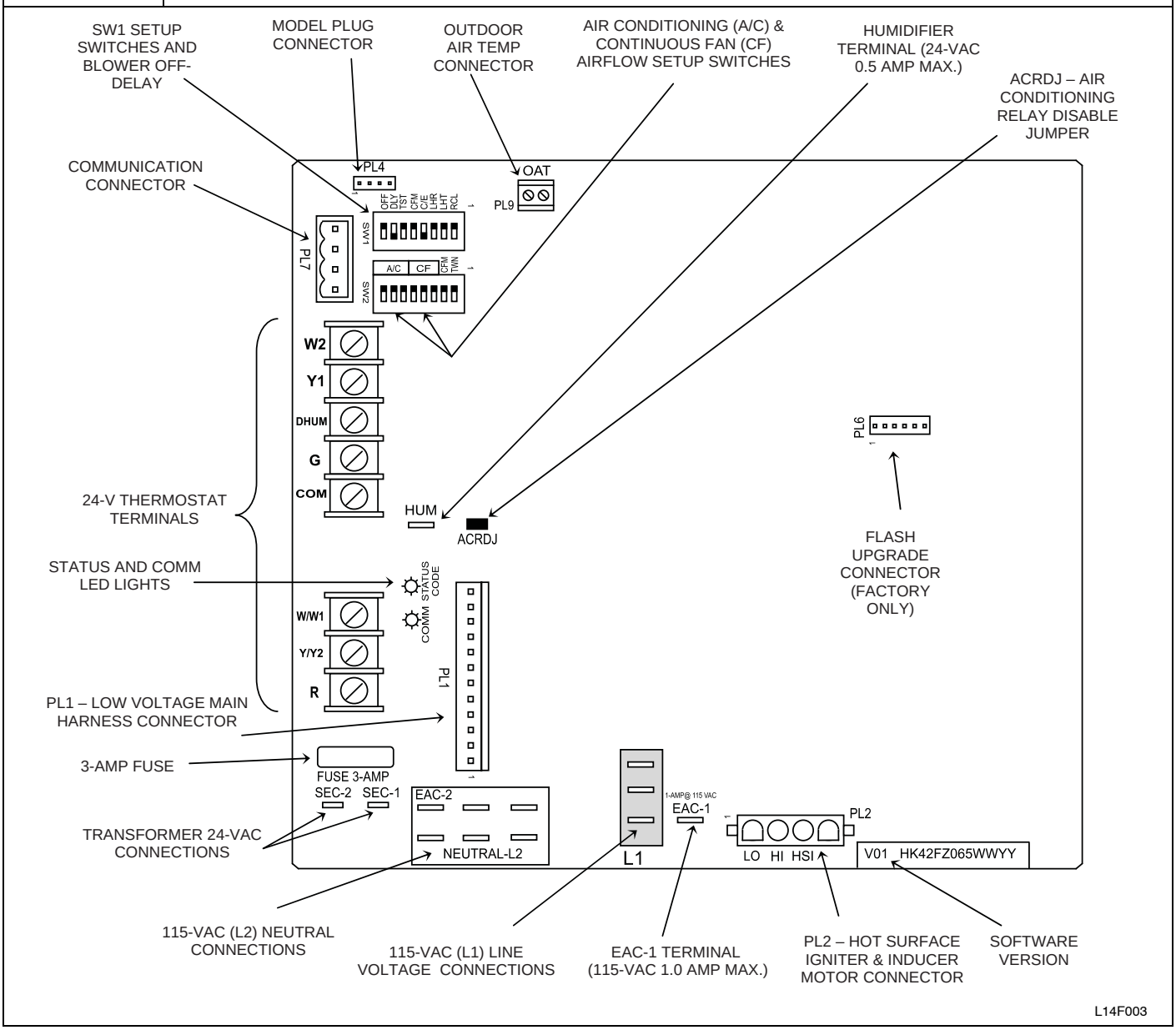

VENTING

NOTE: Planning for the venting system should be done in conjunction with planning for the ductwork, drainage, and furnace accessories, such as air cleaners and humidifiers. Begin assembling the venting system AFTER the furnace is set in place in the required orientation.

Venting for this furnace shall follow all Local codes for category IV venting systems. This furnace is CSA approved for venting with PVC/ABS DWV venting systems. This furnace is also CSA approved for venting the M&G DuraVent® PolyPro® polyproplylene venting systems.

NOTE: THESE INSTRUCTIONS ***DO NOT*** CONTAIN DETAILED INSTALLATION INSTRUCTIONS FOR POLYPROPYLENE VENTING SYSTEMS. Refer to the polyproplylene venting system manufacturer's installation instructions for the polyproplylene venting system installation.

NOTE: When using polypropylene venting systems, all venting materials used, including the vent terminations, must be from the same manufacturer.

Special Venting Requirements for Installations in Canada

Installation in Canada must conform to the requirements of CAN/CSA B149 code. Vent systems **must** be composed of pipe, fittings, cements, and primers listed to ULC S636. The special vent fittings, accessory concentric vent termination kits, and accessory external drain trap available from the furnace manufacturer have been certified to ULC S636 for use with those Royal Pipe and IPEX PVC vent components which have been certified to this standard. In Canada, the primer and cement must be of the same manufacturer as the vent system – GVS-65 Primer (Purple) for Royal Pipe or IPEX System 636, PVC/CPVC Primer, Purple Violet for Flue Gas Venting and GVS-65 PVC Solvent Cement for Royal Pipe or IPEX System 636$_{(1)}$t, PVC Cement for Flue Gas Venting, rated Class IIA, 65 deg C. must be used with this venting system - do not mix primers and cements from one manufacturer with a vent system from a different manufacturer. Follow the manufacturer's instructions in the use of primer and cement and never use primer or cement beyond its expiration date.

The safe operation, as defined by ULC S636, of the vent system is based on following these installation instructions, the vent system manufacturer's installation instructions, and proper use of primer and cement. All fire stop and roof flashing used with this system must be UL listed material. Acceptability under Canadian standard CAN/CSA B149 is dependent upon full compliance with all installation instructions. Under this standard, it is recommended that the vent system be checked once a year by qualified service personnel.

The authority having jurisdiction (gas inspection authority, municipal building department, fire department, etc) should be consulted before installation to determine the need to obtain a permit.

*IPEX System 636™ is a trademark of IPEX Inc.

Consignes spéciales pour l'installation de ventilation au Canada

L'installation faite au Canada doit se conformer aux exigences du code CAN/CSA B149. Ce systême de ventillation **doit** se composer de tuyaux, raccords, ciments et apprêts conformes au ULC S636. La tuyauterie de ventilation des gaz, ses accessoires, le terminal concentrique mural ainsi que l'ensemble du drain de condensation extérieur fourni par le fabricant de cette fournaise ont été certifiés ULC S636 pour l'application des composantes Royal Pipe, IPEX PVC qui sont certifiées à ce standard. Au Canada, l'apprêt et le ciment doivent être du même fabricant que le système d'évacuation. L'apprêt GVS-65 (Purple) et le ciment-solvant GVS-65 doivent être utilisé avec les Royal Pipe. Système IPEX 636, apprêt PVC/CPVC, Purple pour évacuation des gaz de combustion et système IPEX 636(1)t, ciment PVC pour évacuation des gaz de combustion, coté classe IIA, 65 deg C. doivent être utilisés avec le système d'évacuation IPEX 636 – Ne pas combiner l'apprêt et le ciment d'un manufacturier avec un système d'évacuation d'un manufacturier différent.

Bien suivre les indications du manufacturier lors de l'utilisation de l'apprêt et du ciment et ne pas utiliser ceux-ci si la date d'expiration est atteinte.

L'opération sécuritaire, tel que définit par ULC S636, du système de ventilation est basé sur les instructions d'installation suivantes, ainsi que l'usage approprié de l'apprêt et ciment. Tout arrët feu et solin de toit utilisés avec ce système doivent être des matériaux listés UL. L'acceptation du standard Canadien CAN/CSA B149 est directement relié à l'installation conforme aux instructions ci- haut mentionnées. Le standard Canadien recommande l' inspection par un personel qualifié et ce, une fois par année.

Les autoritées ayant juridiction (inspecteurs de gas, inspecteurs en bâtiments, département des incendies, etc) devraient être consultées avant l'installation afin de déterminer si un permis est requis.

⚠ WARNING

CARBON MONOXIDE POISONING HAZARD

Failure to follow the steps outlined below for each appliance connected to the venting system being placed into operation could result in carbon monoxide poisoning or death.

Failure to follow the steps outlined below for each appliance connected to the venting system being placed into operation could result in carbon monoxide poisoning or death.

1. Seal any unused openings in venting system.
2. Inspect the venting system for proper size and horizontal pitch, as required in the National Fuel Gas Code, ANSI Z223.1/NFPA 54 or the CSA B149.1 Natural Gas and Propane Installation Code and these instructions. Determine that there is no blockage or restriction, leakage, corrosion and other deficiencies, which could cause an unsafe condition.
3. As far as practical, close all building doors and windows and all doors between the space in which the appliance(s) connected to the venting system are located and other spaces of the building.
4. Close fireplace dampers.
5. Turn on clothes dryers and any appliance not connected to the venting system. Turn on any exhaust fans, such as range hoods and bathroom exhausts, so they are operating at maximum speed. Do not operate a summer exhaust fan.
6. Follow the lighting instructions. Place the appliance being inspected into operation. Adjust the thermostat so appliance is operating continuously.
7. Test for spillage from draft hood equipped appliances at the draft hood relief opening after 5 minutes of main burner operation. Use the flame of a match or candle.
8. If improper venting is observed during any of the above tests, the venting system must be corrected in accordance with the National Fuel Gas Code, ANSI Z223.1/NFPA 54 and/or CSA B149.1 Natural Gas and Propane Installation Code.
9. After it has been determined that each appliance connected to the venting system properly vents when tested as outlined above, return doors, windows, exhaust fans, fireplace dampers and any other gas–fired burning appliance to their previous conditions of use.

General

If this furnace replaces a furnace that was connected to a vent system or chimney, the vent or vent connectors of other remaining appliances may need to be re–sized. Vent systems or vent connectors of other appliances must be sized to the minimum size as determined using appropriate table found in the current edition of National Fuel Gas Code NFPA 54/ANSI Z–223.1. In Canada, refer to CAN/CSA–B149.1

An abandoned masonry chimney may be used as a raceway for properly insulated and supported combustion–air (when applicable) and vent pipes. Each furnace must have its own set of combustion–air and vent pipes and be terminated individually, as shown in **Figure 49** for Direct Vent (2–Pipe) system, or **Figure 50** for single–pipe or ventilated combustion air option.

A furnace shall not be connected to a chimney flue serving a separate appliance designed to burn solid fuel. Other gas appliances with their own venting system may also use the abandoned chimney as a raceway providing it is permitted by local code, the current edition of the National Fuel Gas Code, and the vent or liner manufacturer's installation instructions. Care must be taken to prevent the exhaust gases from one appliance from contaminating the combustion air of other gas appliances.

Do not take combustion air from inside the chimney when using ventilated combustion air or single–pipe vent option.

These furnaces can be vented as direct–vent (two–pipe), ventilated combustion air, or non-direct (single–pipe) vent system. Each type of venting system is described below. Common venting between these furnaces or other appliances is prohibited.

Materials

U.S.A.

Combustion air and vent pipe, fittings, primers, and solvents must conform to American National Standards Institute (ANSI) standards and American Society for Testing and Materials (ASTM) standards. See **Table 13** for approved materials for use in the U.S.A. This furnace is also CSA approved for venting with M&G DuraVent® PolyPro® polyproplylene venting systems.

Canada

Special Venting Requirements for Installations in Canada Installation in Canada must conform to the requirements of CAN/CSA B149 code. Vent systems **must** be composed of pipe, fittings, cements, and primers listed to ULC S636. M&G DuraVent PolyPro polyproplylene venting systems are ULC S636 listed.

NOTE: When using polypropylene venting systems, all venting materials used, including the vent terminations, must be from the same manufacturer.

Venting Systems

⚠ WARNING

CARBON MONOXIDE POISONING HAZARD

Failure to follow the instructions outlined in Locating the Vent Termination for each appliance being placed into operation could result in carbon monoxide poisoning or death.

For all venting configurations for this appliance and other gas appliances placed into operation for the structure, provisions for adequate combustion, ventilation, and dilution air must be provided in accordance with:

U.S.A. Installations: Current edition of Section 9.3 NFPA 54/ANSI Z223.1, Air for Combustion and Ventilation and applicable provisions of the local building codes.

Canadian Installations: Current edition of Part 8 of CAN/CSA–B149.1. Venting Systems and Air Supply for Appliances and all authorities having jurisdiction.

NOTICE

RECOMMENDED SUPPORT FOR VENT TERMINATIONS

It is recommended that sidewall vent terminations of over 24 inches (0.6 M) in length or rooftop vent terminations of over 36 inches (1 M) in length be supported by EITHER the factory accessory vent termination kit or field-supplied brackets or supports attached to the structure. A factory accessory vent termination kit may be used for direct vent terminations. Termination kits are available for 2-in. or 3-in. pipe. See **Table 12** for available options.

Table 12	Vent Termination Kit for Direct Vent (2–Pipe) Systems	
Direct Vent (2–Pipe) Termination Kit	**Termination System**	**Diam. Of Combustion Air and Vent Pipes in.(mm)**
2–in (51 mm) Concentric Vent Kit	Single Penetration of Wall or Roof	1, 1–1/2, 2, or 2–1/2 (25, 38, 51, 64 mm)
3–in (76 mm) Concentric Vent Kit	Single Penetration of Wall or Roof	2–1/2, 3 or 4 (64, 76, 102 mm)
2–in (51 mm) Termination Bracket Kit	2–Pipe Termination System	1, 1–1/2, 2, or 2–1/2 (25, 38, 51, 64 mm)
3–in (76 mm) Termination Bracket	2–Pipe Termination System	2–1/2, 3 or 4 (64, 76, 102 mm)

Direct Vent / 2–Pipe System

In a direct–vent (2–pipe) system, all air for combustion is taken directly from outdoor atmosphere, and all flue products are discharged to outdoor atmosphere. Combustion-air and vent pipes must terminate together in the same atmospheric pressure zone, either through the roof (preferred) or a sidewall. See **Figure 62** for references to clearances required by National code authorities.

NOTICE

OPTIONAL CONFIGURATION FOR COMBUSTION AIR INLET PIPE

In applications where there is a risk of excessive moisture entering the combustion air inlet pipe, a moisture trap may be added to the inlet pipe to help prevent moisture from entering the furnace from the combustion air inlet pipe. See **Figure 52**.

When sizing venting systems, the equivalent length of the optional inlet pipe moisture trap must be taken into account.

Ventilated Combustion Air Systems

In a ventilated combustion air option, the vent terminates and discharges the flue products directly to the outdoors similar to a direct vent system. See **Figure 63** for references to clearances required by National code authorities.

All air for combustion is piped directly to the furnace from a space that is well ventilated with outdoor air (such as an attic or crawl space) and the space is well isolated from the living space or garage. Combustion air requirements for this option are the same as the requirements for providing outside air for combustion for a single pipe vent system. Refer to the "Air For Combustion and Ventilation Section."

Provisions for adequate combustion, ventilation, and dilution air must be provided in accordance with:

Non-Direct Vent (1-pipe) System

In a non direct-vent (1-pipe) system, all air for combustion is taken from the area adjacent to furnace, and all flue products are discharged to outdoor atmosphere. Air for combustion must be supplied as described in the Air For Combustion and Ventilation Section. Do not use an abandoned chimney to supply outside air to the furnace. See **Figure 63** for references to clearances required by National code authorities.

A combustion air pipe to the outdoors is not required for a single pipe vent system. A 12-in. (304 mm) long pipe with a 2–in. (50 mm Nominal Dimension– ND) tight radius 90 degree elbow is required to be attached to the combustion air pipe adapter on the furnace. (See **Figure 59**) This short inlet air pipe helps to ensure stable combustion, as well as allow for sound attenuation. To aid sound attenuation, point the inlet air pipe away from occupants. An extra elbow and/or five feet (1.5 M) of pipe may be used to accomplish the sound attenuation function.

NOTICE

OPTIONAL VENTING BELOW THE FURNACE

The venting system may be positioned below the furnace ONLY IF the factory accessory External Vent Trap Kit is used. The External Vent Trap Kit is only approved for PVC/ABS DWV venting systems.

CAREFULLY FOLLOW THE INSTRUCTIONS PROVIDED WITH THE EXTERNAL VENT TRAP KIT FOR LAYING OUT THE VENTING SYSTEM AND THE DRAIN SYSTEM. The instructions included with this furnace DO NOT APPLY to vent systems that are located below the furnace

⚠ WARNING

CARBON MONOXIDE POISONING HAZARD

Failure to follow the instructions outlined in Locating the Vent Termination for each appliance being placed into operation could result in carbon monoxide poisoning or death.

The instructions included with this furnace DO NOT APPLY to vent systems that are located below the furnace. *CAREFULLY FOLLOW THE INSTRUCTIONS PROVIDED WITH THE EXTERNAL VENT TRAP KIT FOR LAYING OUT THE VENTING SYSTEM AND THE DRAIN SYSTEM when all or part of the venting system is placed below the furnace.*

Proper configuration of the venting and drain system is critical when placing all or part of the venting system below the level of the furnace. VENT GASSES COULD BE RELEASED FROM THE DRAINAGE SYSTEM, if the instructions provided with the External Vent Trap Kit are not followed.

MATERIALS

Table 13 — Approved Combustion-Air and Vent Pipe, Fitting and Cement Materials (U.S.A. Installation)

USA	1. All pipe, fittings, primers*, and solvents* must conform to American National Standards Institute (ANSI) standards and American Society for Testing and Materials (ASTM) standards or ULC S636 where required by code. 2. See Table below for approved materials for use in the U.S.A. 3. ULC S636 vent systems must be composed of pipe, fittings, cements, and primers from the same supplier. 4. Factory accessory concentric vent kits are ULC S636 listed.
CANADA	1. Installation in Canada must conform to the requirements of CAN/CSA B149 code. 2. Vent systems must be composed of pipe, fittings, cements, and primers from the same supplier and listed to ULC S636. 3. Not all materials below may be approved or listed to ULC S636. 4. Royal Pipe and IPEX are approved suppliers of ULC S636 pipe, fittings, cements and primers*. 5. Factory accessory concentric vent kits are ULC S636 listed for use with Royal Pipe and IPEX venting systems.

Material	Description	Type	ASTM or ULC Specification			
			Pipe	Fittings	Solvents Primers*	Cements
PVC	Pressure Pipe	Schedule 40	D1785	D2466	F656	D2564
	DWV	Schedule 40	D2665	D2665		
	Cellular Core	Schedule 40	F891	N/A		
	SDR 26	N/A	D2241	N/A		
	SDR21	N/A	D2241	N/A		
	IPEX	Schedule 40	ULC S636	ULC S636	ULC S636	ULC S636
	Royal Pipe	Schedule 40	ULC S636	ULC S636	ULC S636	ULC S636
ABS	ABS	Schedule 40	D2661	D2661	Clear Cleaner For ABS†	D2235
	Cellular Core DWV	Schedule 40	F628	N/A		
CPVC	Pressure Pipe	Schedule 40	F441	F438	F656	F493
	SDR	N/A	F442	N/A		
	IPEX	Schedule 40	ULC S636	ULC S636	ULC S636	ULC S636
	Royal Pipe	Schedule 40	ULC S636	ULC S636	ULC S636	ULC S636

*Colored or tinted solvents or primers must be used where required by code in the USA

†ABS plastic does not require a primer before solvent cementing. A cleaner for ABS is recommended to remove any surface residue. ABS cleaners are not subject to ASTM standards.

Polypropylene	Approved Manufacturer	Solvents Primers	Cements
Poly Pro®	M & G Dura Vent	Not Permitted	Not Permitted

NOTE: Polypropylene vent systems are UL–1738 and ULC S636 listed and assembled using mechanical fastening systems supplied by the vent manufacturer.

Figure 42 — Vent Coupling and Adapter with Gaskets

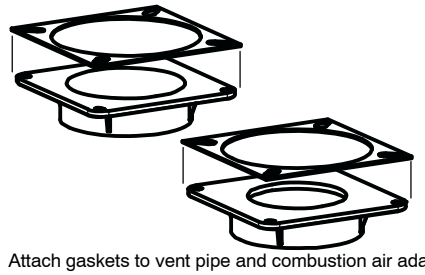

Attach gaskets to vent pipe and combustion air adapters

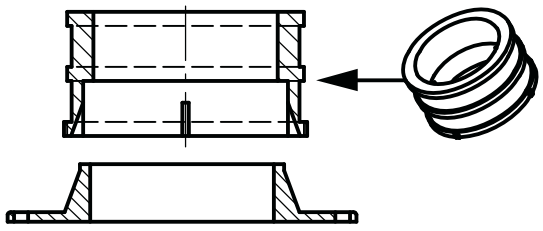

Vent Coupling and Adapter

A13074

Figure 43 — Vent Pipe Flush with Adaptor

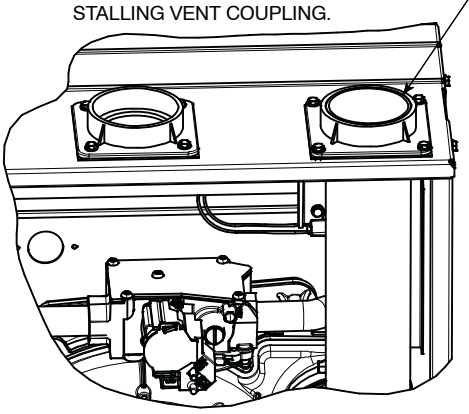

A13076A

Figure 44	Vent Pipe Flush Showing Coupling

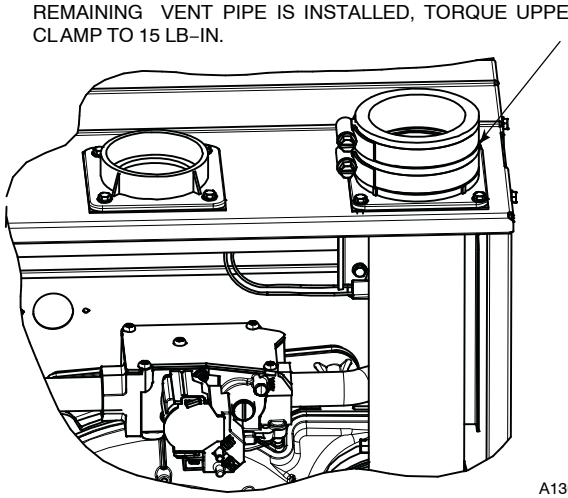

Locating the Vent Termination

General

NOTE: **Termination Requirements for the Provinces of Alberta and Saskatchewan are located at the end of this section.**

Combustion–air inlet pipe (Direct Vent/2–Pipe system only) and vent pipe must terminate outside structure, either through sidewall or roof.

For vent termination clearance, references to National codes are shown in **Figure 62** for Direct Vent/2–Pipe system and **Figure 63** for Ventilated Combustion Air/Non–direct Vent/1–Pipe system. For exterior termination arrangements, refer to **Figure 62** for Direct Vent/2–Pipe system and **Figure 63** for Ventilated Combustion Air/Non– Direct/1–Pipe system. Contact Local code authorities for other requirements to and/or exemptions from the National codes shown in the figures.

Roof termination is the recommended termination location. Roof terminations provide better performance against sustained prevailing winds. The roof location is preferred since the vent and combustion air system is less susceptible to damage or contamination. The termination is usually located away from adjacent structures or other obstacles such as inside corners, windows, doors or other appliances. It is less prone to icing conditions, and it often has less visible vent vapors.

Sidewall terminations may require sealing or shielding of building surfaces with a corrosive resistance material due to the corrosive properties of combustion products from the vent system, as well as protection of adjacent structures.

NOTICE

RECOMMENDED SUPPORT FOR VENT TERMINATIONS

It is recommended that side-wall vent terminations in excess of 24 inches (0.6 M) or rooftop terminations in excess of 36 inches (1.0 M) in vertical length be supported by EITHER the Direct Vent Termination Kit shown in **Table 12** or by field-supplied brackets or supports fastened to the structure.

NOTE: (Direct Vent/2–Pipe system ONLY) Terminate with the standard termination as shown in **Figure 62** or use a factory–approved accessory termination kit.

When determining appropriate location for termination, consider the following guidelines:

1. Comply with all clearance requirements stated in **Figure 62** or **Figure 63** per application.
2. Termination or termination kit should be positioned where vent vapors will not damage plants/shrubs, air conditioning equipment or utility meters.
3. Do not locate termination directly into prevailing winds. Termination should be positioned so that it will not be affected by sustained prevailing winds over 30 mph, wind eddy, such as inside building corners, or by recirculation of flue gases, airborne leaves, or light snow.
4. Termination or termination kit should be positioned where it will not be damaged by or subjected to foreign objects such as stones, balls, etc.
5. Termination or termination kit should be positioned where vent vapors are not objectionable**.**

INSIDE CORNER TERMINATIONS

Inside corner vent terminations are permitted provided that:

1. Only two exterior walls come together to form an angle of 90 degrees to 135 degrees. There are no other exterior walls attached to either wall to form an alcove.
2. The clearance distances apply when the vent is at least 3 feet (1 meter) from, but not more than 6 feet (2 meters) away from an inside corner.
3. For vent terminations located more than 6 feet (2 meters) from an inside corner, refer to the appropriate Direct Vent Clearance Table for all two pipe terminations or Non–Direct Vent Clearance Table for all single pipe terminations.
4. The clearance distances to items between the vent termination and the outside corner, refer to the appropriate Direct Vent Clearance Table for all two pipe terminations or Non–Direct Vent Clearance Table for all single pipe terminations.

Figure 45 Inside Corner Termination

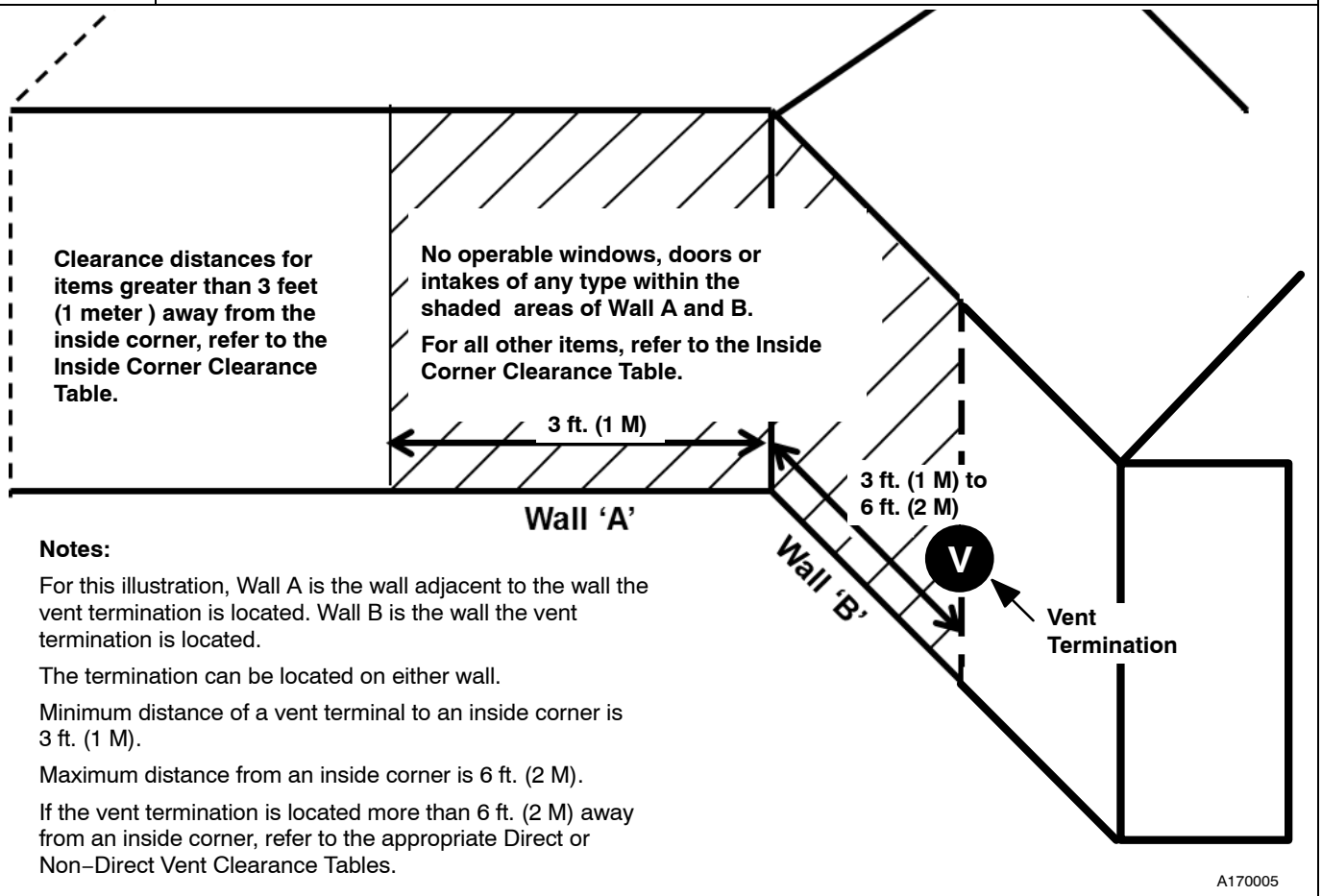

Notes:

For this illustration, Wall A is the wall adjacent to the wall the vent termination is located. Wall B is the wall the vent termination is located.

The termination can be located on either wall.

Minimum distance of a vent terminal to an inside corner is 3 ft. (1 M).

Maximum distance from an inside corner is 6 ft. (2 M).

If the vent termination is located more than 6 ft. (2 M) away from an inside corner, refer to the appropriate Direct or Non−Direct Vent Clearance Tables.

For clearance distances when vent termination is located more than 6 ft. (2 M) away from an inside corner, refer to the appropriate Direct Vent or Non−Direct Vent Clearance Table.	
Clearance description when termination is at least 3 ft. (1 M) away and not more than 6 ft. (2 M) away from an inside corner.	
Clearance above grade, veranda, porch, deck, balcony or anticipated snow level	12−in. (305 mm)
Clearance to a permanently closed window on either Wall A or Wall B	12−in. (305 mm)
Vertical clearance to a soffitt located above the vent termination within a horizontal distance of 2 ft. (61 cm) from the centerline of the vent termination	6 ft. (2 M)
Clearance to a ventilation exhaust (including HRV/ERV) on either Wall A or Wall B	12−in. (305 mm)
Clearance above paved sidewalk or paved driveway located on public property	7 ft. (2.1 M)
Clearance under a veranda, porch, deck, or balcony	N.P.*
No operable windows, doors or intakes of any type are permitted on Wall B between the vent termination and the inside corner when the vent termination is at least 3 ft. (1 M) away and not more than 6 ft. (2 M) away from an inside corner.	
The following items on Wall A must be located at least 3 ft. (1 M) away from the inside corner when a vent termination is located on Wall B and the vent termination is at least 3 ft. (1 M) away or not more than 6 ft. (2 M) away from an inside corner.	
A window or door that may be opened	
The centerline extended above electrical meter or gas service regulator assembly	
A service regulator vent outlet	
The centerline of a dryer or water heater vent, or other appliance's vent intake	
A non−mechanical air supply inlet	
Clearance distances shown for Wall A are measured horizontally from the exit of the termination on Wall B to the closest edge of the item shown below.	
Clearance to a mechanical air supply (including HRV/ERV) inlet unless termination is 3 ft. (1 M) above the horizontal line of the intake	10 ft. (3 M)
For clearance distances from a vent termination to the outside corner of the wall, refer to the appropriate Direct Vent or Non−Direct Vent Clearance Table	
*N.P. = Not Permitted *N/A = Not Applicable	

Direct Vent / 2−Pipe System

Direct vent (2−pipe) vent and combustion air pipes must terminate outside the structure. See **Figure 62** for references to vent clearances required by National code authorities. Allowable vent and combustion air terminations are shown in **Figure 49**.

⚠ WARNING

CARBON MONOXIDE POISONING HAZARD

Failure to follow the instructions outlined in Locating the Vent Termination for each appliance being placed into operation could result in carbon monoxide poisoning or death.

For all venting configurations for this appliance and other gas appliances placed into operation for the structure, provisions for adequate combustion, ventilation, and dilution air must be provided in accordance with:

U.S.A. Installations: Current edition of Section 9.3 NFPA 54/ANSI Z223.1 1, Air for Combustion and Ventilation and applicable provisions of the local building codes.

Canadian Installations: Current edition of Part 8 of CAN/CSA−B149.1. Venting Systems and Air Supply for Appliances and all authorities having jurisdiction.

Ventilated Combustion Air

The vent pipe for a Ventilated Combustion Air System must terminate outdoors. See **Figure 62** for references to vent clearances required by National code authorities. Allowable vent terminations are shown in **Figure 50**. The combustion air pipe terminates in a well−ventilated attic or crawl space. Follow the clearances as shown in **Figure 60** and **Figure 61**.

The combustion air pipe cannot terminate in attics or crawl spaces that use ventilation fans designed to operate in the heating season. If ventilation fans are present in these areas, the combustion air pipe must terminate outdoors as a Direct Vent System.

Non−Direct Vent / 1−Pipe System

The vent pipe for a Non Direct Vent (1−pipe) system must terminate outdoors. See **Figure 63** for references to vent clearances required by National code authorities. Allowable vent terminations are shown in **Figure 50**.

A combustion air inlet pipe to the outdoors is not required for a Non−Direct Vent System. A 12−in. long section of pipe with a tight radius 2−in. (51 mm) 90 degree elbow is required to be attached to the furnace. See **Figure 46** and **Figure 48**. This short inlet air pipe helps to ensure inlet air pipe away from occupants. An extra elbow and/or five fee (1.5 M) of pipe may be used to accomplish the sound attenuation function.

Termination Requirements for the Provinces of Alberta and Saskatchewan

The Provinces of Alberta and Saskatchewan require a minimum unobstructed distance of 4 ft. (1.2m) from the foundation to the property line of the adjacent lot for vent termination of any appliance with an input over 35,000 btuh. If there is less than 4 ft. (1.2m) of unobstructed distance to the property line of the adjacent lot, no type of vent termination is permitted for appliances with inputs greater than 35,000 btuh.

There are no additional restrictions on unobstructed distances greater than 8 ft. (2.4m). All single, two-pipe and concentric vents may be used, providing all other Code and manufacturer's requirements in these instructions are adhered to. Refer to the appropriate **Vent Termination** section above for locating the vent termination .

If the unobstructed distance from the foundation to the property line of the adjacent lot is no less than 4 ft. (1.2m) and no greater than 8 ft. (2.4m), it will be necessary to re-direct the flue gas plume. In this situation, a concentric vent kit cannot be used. A 2-pipe termination (or single pipe termination when permitted) that re-directs the flue gas away by use of an elbow or tee, certified to ULC S636 from the adjacent property line must be used. (See **Figure 46** and **Figure 48**)

The concentric vent kit currently cannot be modified to attach an elbow to the vent portion of the rain cap. A tee attached to the rain cap could potentially direct the flue gas plume toward the intake air stream and contaminate the incoming combustion air for the furnace.

Refer to **Figure 46** and **Figure 48** for terminations approved for use in Alberta and Saskatchewan.

Figure 46 **Tee at Termination Outlet**

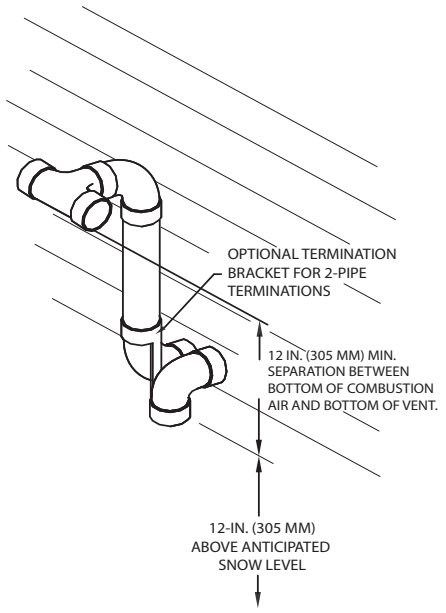

Figure 47 **Sample Inlet Air Pipe Connection for Polypropylene Venting Systems**

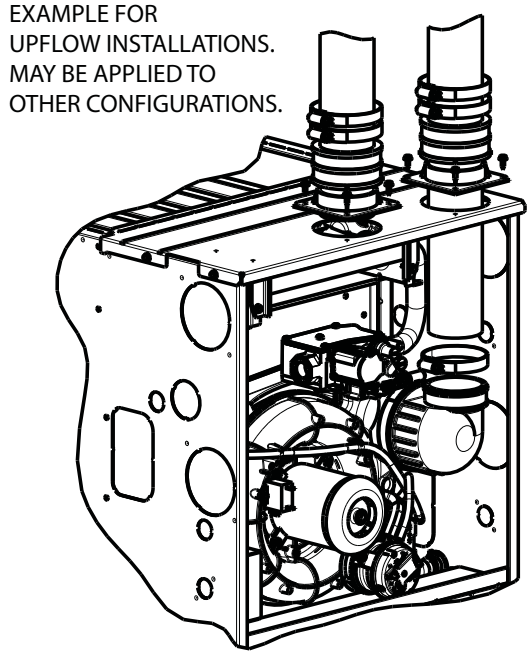

Figure 48 Vent Terminations

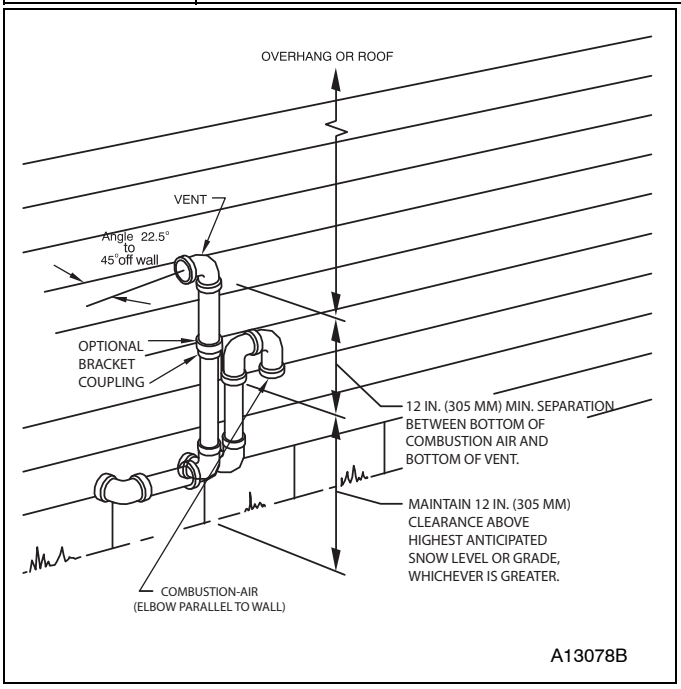

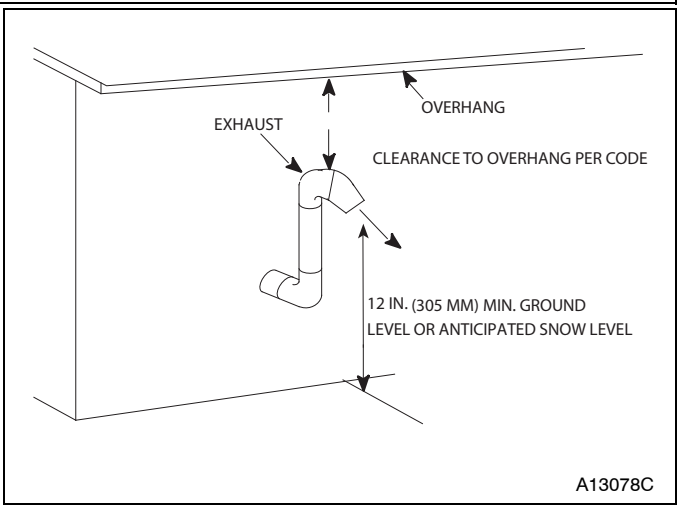

Figure 49 Combustion Air and Vent Pipe Termination for Direct Vent (2–Pipe) System

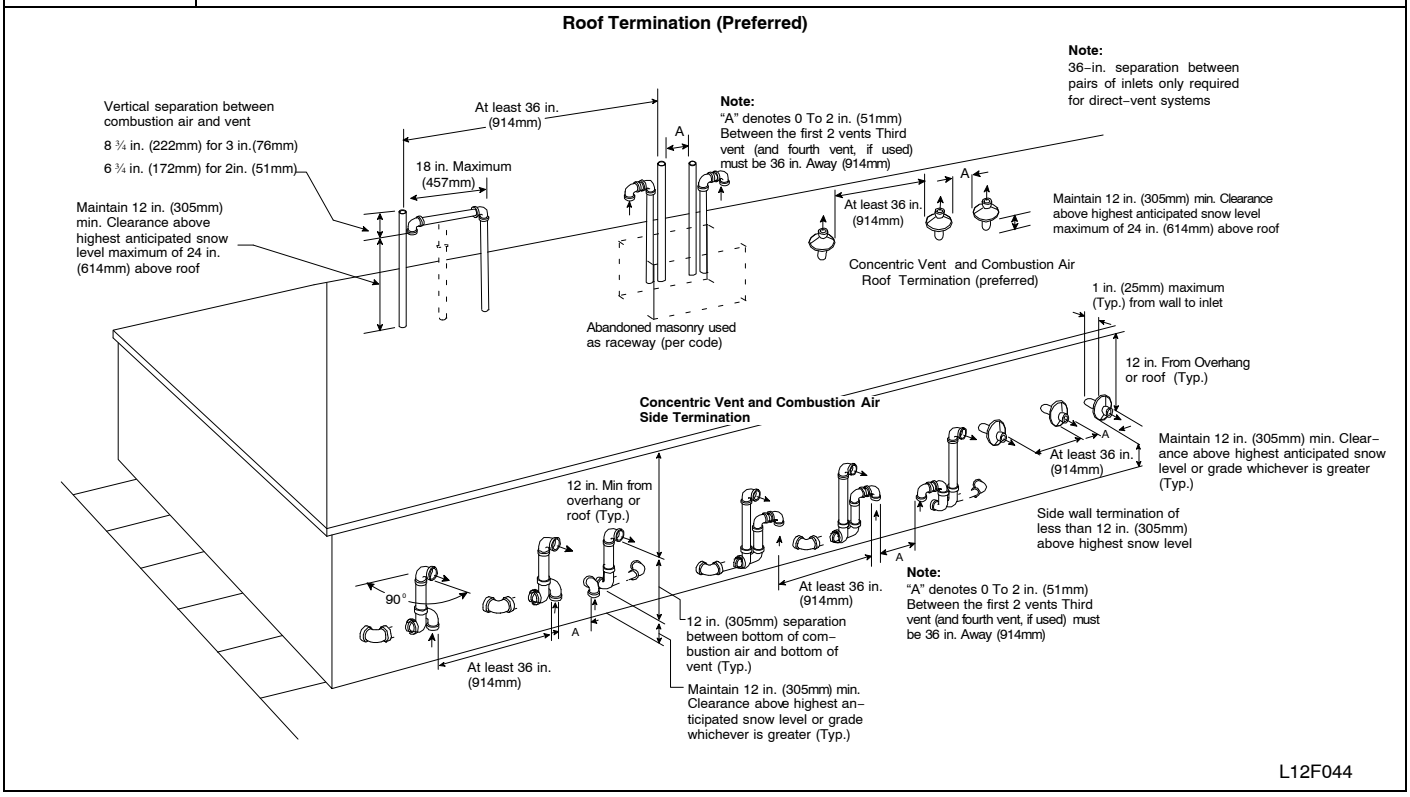

Figure 50 **Vent Pipe Termination for Non–Direct Vent and Ventilated Combustion Air System**

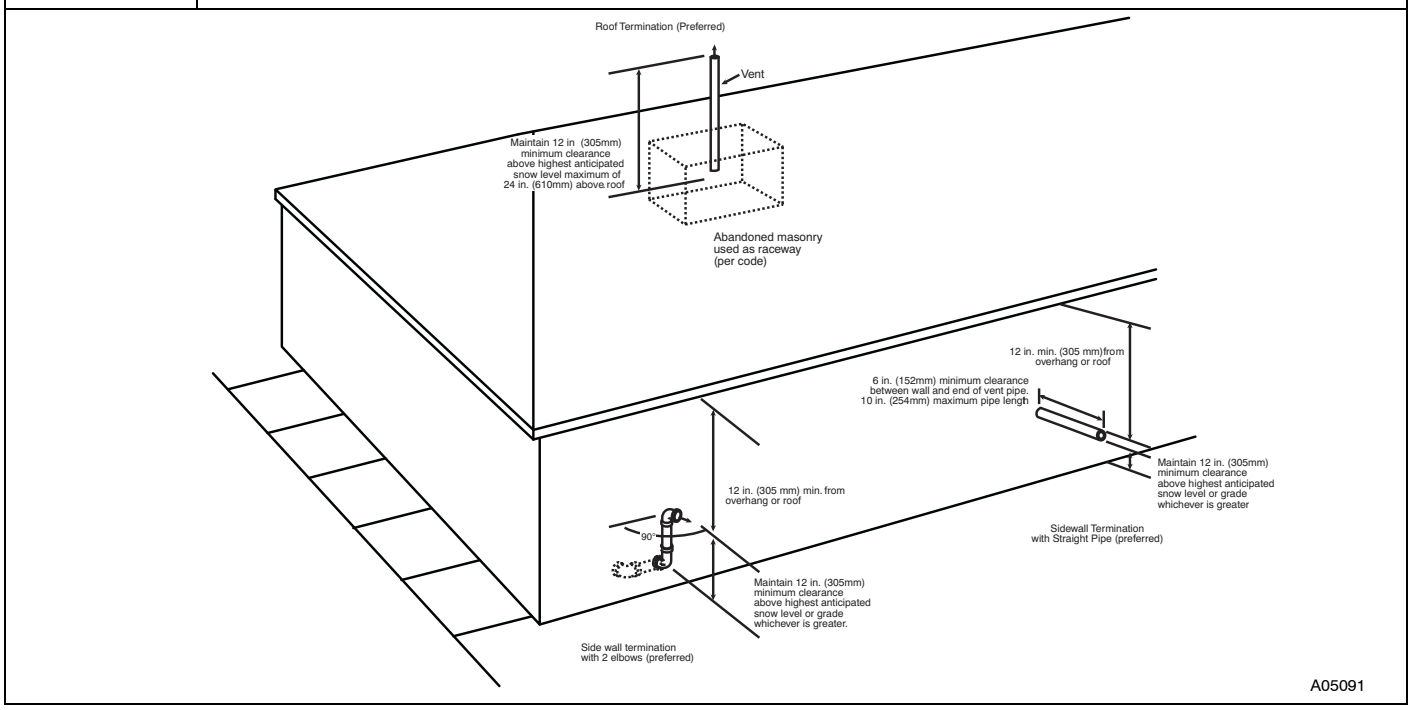

Size the Vent and Combustion Air Pipes

General

Vent and Combustion Air Pipe Diameters	Approved Two–Pipe Termination Fittings					Allowable Concentric Vent Kit
	1 1/2–in. (38 mm)	2–in. (51 mm)	2 1/2–in. (64 mm)	3–in. (76–mm)	4–in. (102 mm)	
1 1/2–in. (38 mm)	No	Yes	No	No	No	2–in. (51 mm)
2–in. (51 mm)	No	Yes	No	No	No	2–in. (51 mm)
2 1/2–in. (64 mm)	No	No	No	Yes	No	2–in. (51 mm) 3–in. (76 mm)
3–in. (76–mm)	No	No	No	Yes	No	3–in. (76 mm)
4–in. (102 mm)	No	No	No	Yes	Yes	3–in. (76 mm)

Furnace combustion air and vent pipe connections are sized for 2-in. (50 mm ND) PVC/ABS DWV pipe. The combustion air and vent pipe connections also accommodate 60mm polypropylene venting systems with outside diameters of approximately 60 mm (2–3/8 inches). Any pipe diameter change should be made outside furnace casing in vertical pipe. Any change in diameter to the pipe must be made as close to the furnace as reasonably possible (see **Figure 51**).

The Maximum Vent Length for the vent pipe and combustion air pipe (when used) equals the Maximum Equivalent Vent Length (MEVL) in **Table 14**, minus the number of fittings multiplied by the deduction for each type of fitting used from **Table 15**.

Figure 51 **Combustion–Air and Vent Pipe Diameter Transition Location and Elbow Configuration**

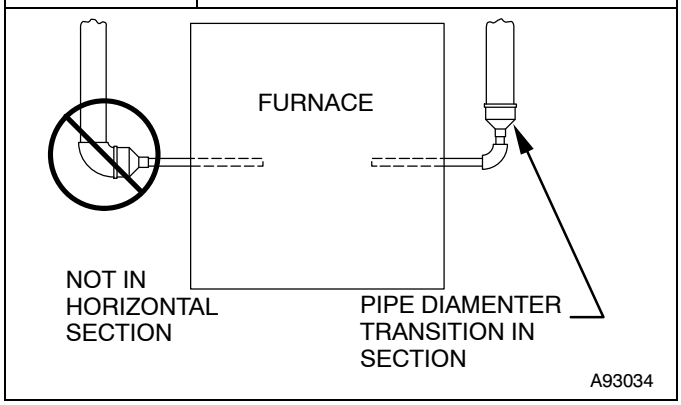

NOTICE

OPTIONAL CONFIGURATION FOR COMBUSTION AIR INLET PIPE

In applications where there is a risk of excessive moisture entering the combustion air inlet pipe, a moisture trap may be added to the inlet pipe to help prevent moisture from entering the furnace from the combustion air inlet pipe. See **Figure 52**.

When sizing venting systems, the equivalent length of the optional moisture trap (15 feet/5 M) must be taken into account

Combustion Air Inlet Moisture Trap

To prevent moisture from trickling into the furnace vestibule, a trap can be installed in the intake air pipe near the furnace. Connecting a drain line to the trap is recommended as trace amounts of moisture will evaporate into the intake air stream. If the combustion air inlet is located near a moisture exhaust duct, or there are other concerns of excessive moisture being drawn into the combustion air inlet, it is encouraged to connect a drain line to the trap.

The trap can be constructed from a running tee of the same diameter of the intake air pipe with EITHER a removable cap attached to a 6-inch long pipe connected to the tee or the External vent Trap Kit to help prevent contaminants from entering the furnace. See **Figure 52**.

The External Vent Trap Kit accessory may be used as a trap for the combustion air inlet pipe if a large amount of moisture must be removed. The drain line may be connected to the same drain as the furnace condensate and the evaporator coil condensate line ONLY if the inlet air trap drain and the evaporator coil drain empty into an open segment of pipe above the drain, See **Figure 13**. When using the External Vent Trap Kit, refer to those instructions for proper drain connections.

The tee may also be connected to the intake air pipe on the side of the casing. See **Figure 52**.

In any configuration, it will be necessary to add the equivalent length of the tee (15 feet/5 M) to the Total Equivalent Vent Length of the venting system.

NOTICE

ADDITIONAL INFORMATION FOR POLYPROPYLENE VENTING SYSTEMS

Polypropylene venting systems include flexible vent pipe. These flexible vent pipes have a different equivalent vent length than straight sections of PVC/ABS DWV vent pipe. Be sure to make the appropriate deductions from the Maximum Equivalent Vent Length (MEVL), or additions to the Total Equivalent Vent Length (TEVL), when applying flexible vent pipes in polypropylene venting systems. See the polypropylene vent system manufacturer's installation instructions for details.

When using metric-sized venting systems, use these equivalencies for obtaining the proper MEVL from the Tables:

Use 2" Vent Tables for 60mm (o.d.) vent systems
Use 3" Vent Tables for 80mm (o.d.) vent systems
Use 4" Vent Tables for 100mm (o.d.) vent systems

The measured length of pipe used in a single or 2–pipe termination is included in the total vent length. Include deductions from the Maximum Equivalent Vent Length (MEVL) contained in the Venting Tables for elbows and flexible vent pipe. Factory accessory concentric vent terminations, or pipe lengths and elbows used for "standard" vent terminations (see vent termination figures associated with **Table 14**) do not require a deduction from the Maximum Equivalent Vent Length. Include a deduction for a Tee when used for Alberta and Saskatchewan terminations.

NOTE: Polypropylene venting systems MAY require additional deductions from the MEVL, or additions to the TEVL, for vent terminations and flexible pipe sections. See the polypropylene venting system manufacturer's instructions for details on equivalent lengths of vent terminations and flexible vent pipes, and for calculating total vent lengths.

To calculate the Total Equivalent Vent Length (TEVL) of the venting system:

1. Measure the individual distance from the furnace to the termination for each pipe.
2. Count the number of elbows for each pipe.
3. For each pipe, multiply the number of elbows by the equivalent length for the type of elbow used. Record the equivalent length of all the elbows for each pipe.
4. If a Tee is used on the termination (Alberta and Saskatchewan, when required), record the equivalent length of the Tee used.
5. Calculate Total Equivalent Vent Length by adding the equivalent lengths of the fittings to the lengths of the individual vent and combustion air pipes.
6. When using polypropylene venting systems with flexible vent pipes, perform adjustments for the equivalent length of the flexible vent pipe to the calculated total equivalent venting system length. See the polypropylene vent system manufacturer's instructions for details.
7. Select a diameter of vent pipe from **Table 14** and note the Maximum Equivalent Vent Length (MEVL) shown for that application for that specific furnace input size. Compare the Total Equivalent Vent Length (TEVL) to the MEVL:
   a. If the Total Equivalent Vent Length is ***shorter*** than the Maximum Equivalent Vent Length for the diameter of pipe chosen, then that diameter of pipe selected may be used.
   b. If the Total Vent Length is ***longer*** than the Maximum Equivalent Vent Length for the diameter of pipe chosen, that diameter pipe MAY NOT be used for venting the furnace. Try the next larger diameter pipe.

NOTE: If the calculated Total Equivalent Vent Lengths results in different diameter pipes for the vent and combustion air, select the larger diameter for both pipes.

NOTE: If the Maximum Vent Length for diameter of the pipe selected is longer than the measured length and the equivalent length of all the fittings and terminations (TEVL), recalculate Total Equivalent Vent Length using the next smaller diameter. If the Maximum Vent Length is still longer than the longer TEVL of the vent pipe or combustion air pipe, then that diameter of pipe selected may be used.

When installing vent systems with pipe lengths of 10 ft. (3.0 M) or less, use the smallest allowable pipe diameter. Using pipe size greater than required for short venting systems may result in loss of efficiency, incomplete combustion, flame disturbance, or flame sense lockout.

For vent systems longer than 10 ft. (3.0 M), any larger diameter shown in **Table 14** for that size model may be used.

Figure 52 **Recommended Combustion Air Inlet Moisture Trap**

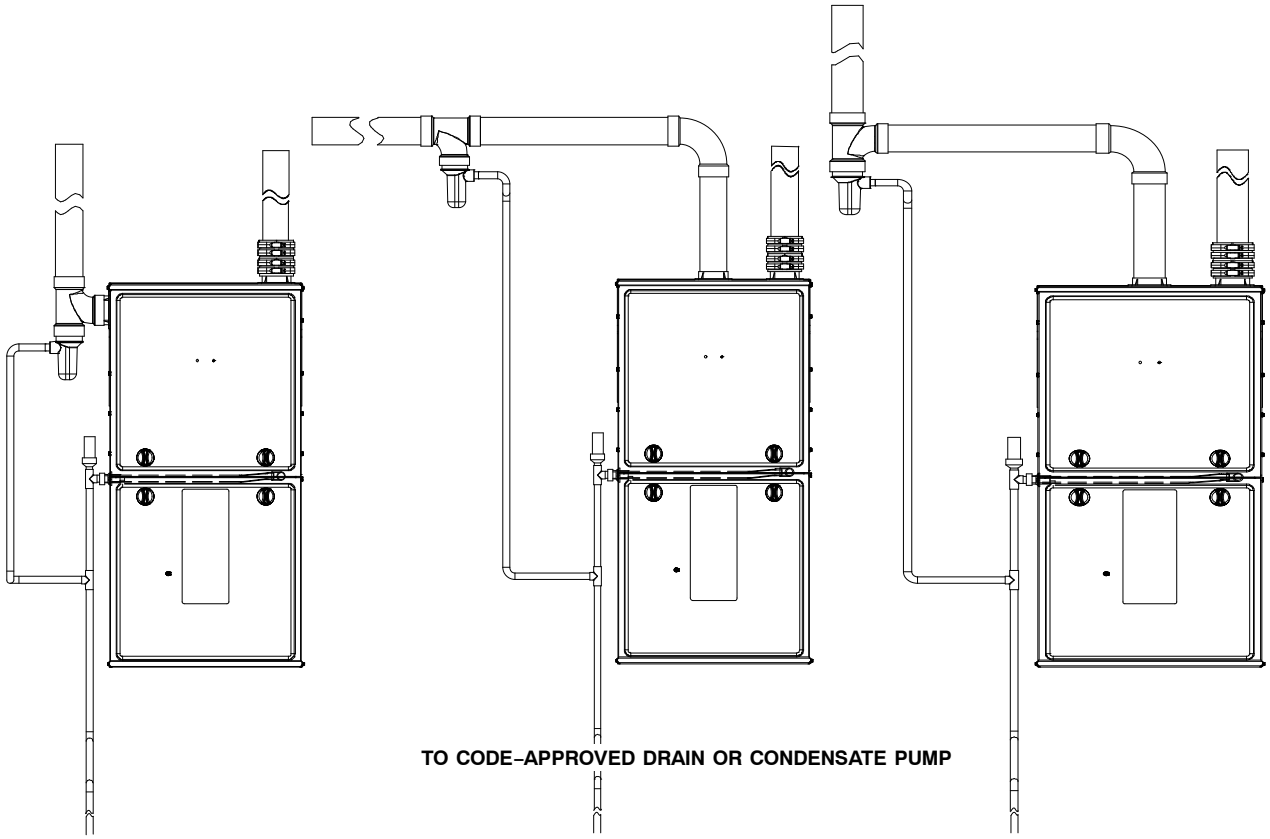

Representative drawing only, some models may vary in appearance.

L12F028

Combustion Air and Vent Piping Insulation Guidelines

NOTE: Use closed cell, neoprene insulation or equivalent.

The vent pipe may pass through unconditioned areas. The amount of exposed pipe allowed is shown in **Table 16**.

1. Using winter design temperature (used in load calculations), find appropriate temperature for your application and furnace model.
2. Determine the amount of total and exposed vent pipe.
3. Determine required insulation thickness for exposed pipe length(s).
4. When combustion air inlet piping is installed above a suspended ceiling, the pipe **MUST** be insulated with moisture resistant insulation such as Armaflex or other equivalent type of insulation.
5. Insulate combustion air inlet piping when run in warm, humid spaces.
6. Install the insulation per the insulation manufacturer's installation instructions.

NOTE: Pipe length (ft / M) specified for maximum pipe lengths located in unconditioned spaces (See **Table 16**) cannot exceed total allowable pipe length as calculated from **Table 14**.

Configure the Furnace

⚠ WARNING

CARBON MONOXIDE POISONING HAZARD

Failure to follow this warning could result in personal injury or death.

To route the vent pipe and combustion air pipe through the furnace, the manufacturer supplied kit must be used. Failure to properly seal the blower compartment from the furnace vestibule could result in the circulation of carbon monoxide throughout the structure. The vent pipe and combustion air pipe must be a continuous pipe while passing through the blower compartment. Seals supplied in this kit must be installed per the instructions provided. Follow all procedures outlined in these instructions.

Near Furnace Vent Connections

Offsets in the vertical portion of the vent pipe should be made with 45 degree elbows instead of 90 degree elbows. Short horizontal runs of vent pipe are difficult to pitch correctly and may trap water in the vent pipe.

Trapped water in the vent pipe may result in nuisance pressure switch tripping.

Figure 53 Near Furnace Vent Connections

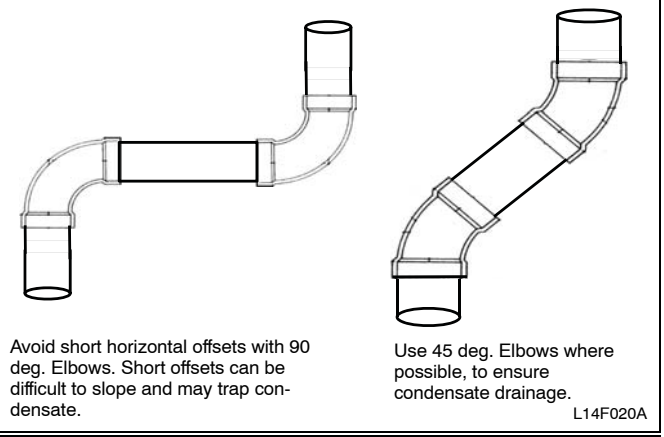

Install the Vent and Combustion Air Pipes

With the furnace installed in the required position, remove the desired knockouts from the casing. It will be necessary to remove one knockout for the vent pipe and the other knockout for the combustion air connection. (See **Figure 12**)

Use a flat blade screwdriver and tap on the knockout on opposite sides, where the knockout meets the casing. Fold the knockout down with duct pliers and work the knockout back and forth until it is removed. Trim any excess metal from the knockout with tin snips.

The vent elbow can be rotated to the required location on the casing if necessary. See **Figure 54** to rotate the vent elbow:

1. Loosen the clamp on the inlet of the vent elbow attached to the inducer.
2. Rotate the vent elbow to the required position. There are rounded notches in the vent elbow to align it with the inducer for each orientation.
3. Tighten the clamp around the vent elbow. Torque the clamp to 15 lb-in. See **Figure 55** through **Figure 58**.

Figure 54 Inducer Vent Elbow – PSC

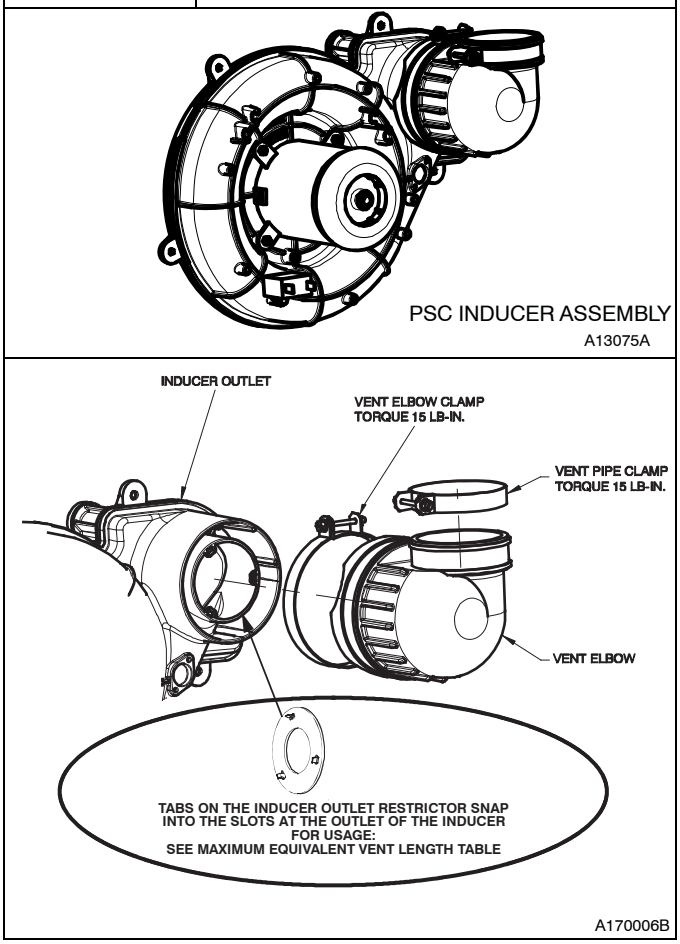

Figure 55 Upflow Configurations

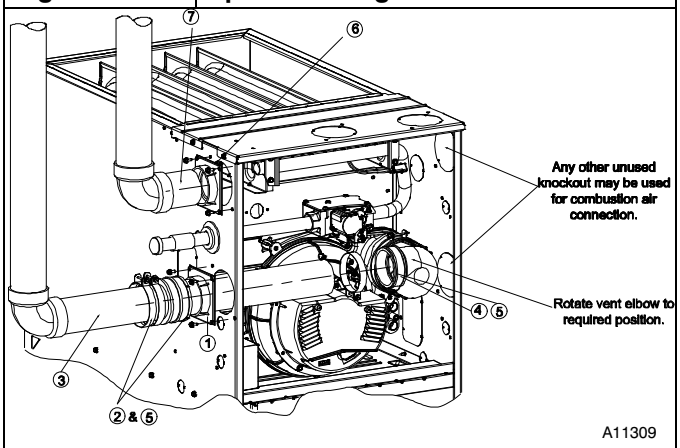

UPFLOW LEFT – VENT CONFIGURATION

Representative drawing only, some models may vary in appearance.

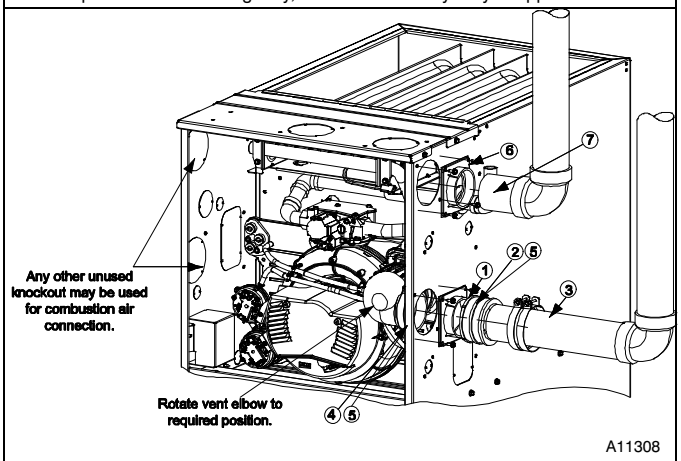

UPFLOW RIGHT – VENT CONFIGURATION

Representative drawing only, some models may vary in appearance.

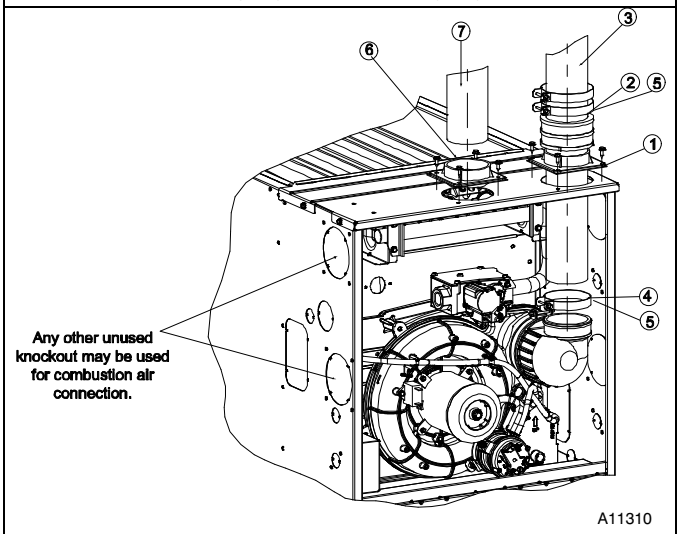

UPFLOW VERTICAL – VENT CONFIGURATION

Representative drawing only, some models may vary in appearance.

* See NOTES following figures.

Figure 56 Downflow Configurations

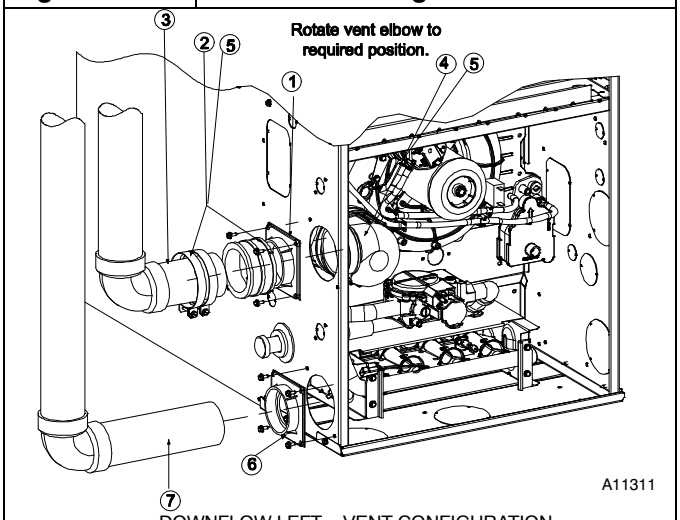

DOWNFLOW LEFT – VENT CONFIGURATION

Representative drawing only, some models may vary in appearance.

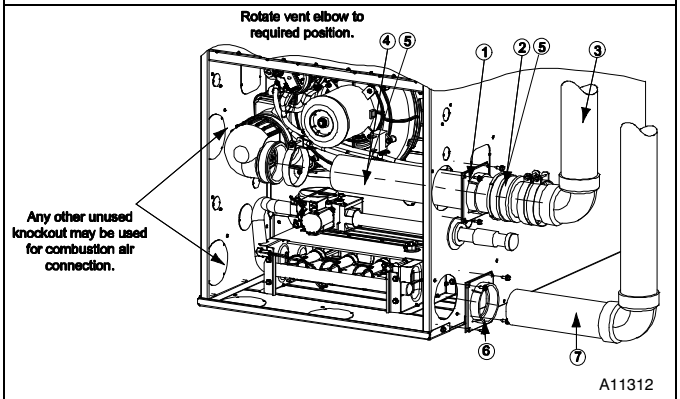

DOWNFLOW RIGHT – VENT CONFIGURATION

Representative drawing only, some models may vary in appearance.

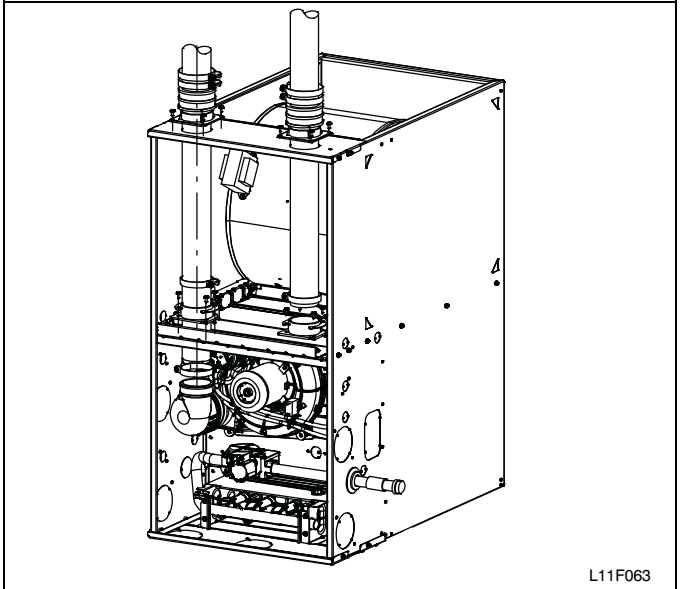

DOWNFLOW VERTICAL – VENT CONFIGURATION

Requires Accessory Internal Vent Kit
See Specification Sheets for current kit number

Representative drawing only, some models may vary in appearance.

* See NOTES following figures.

Figure 57	Horizontal Left Configurations

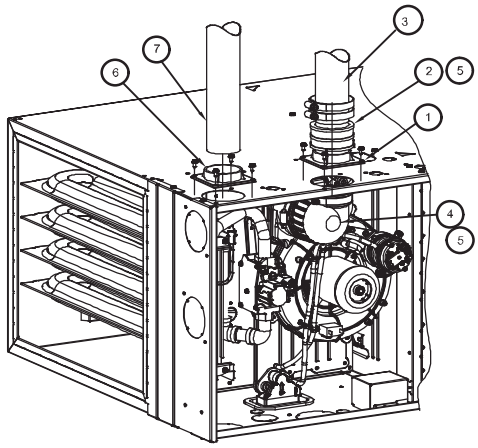

A11327

HORIZONTAL LEFT – VERTICAL VENT CONFIGURATION

Representative drawing only, some models may vary in appearance.

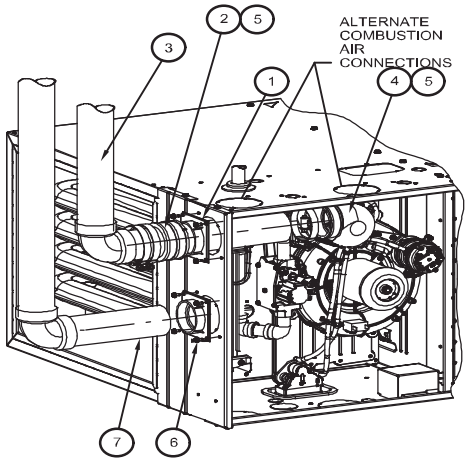

A11328

HORIZONTAL LEFT – LEFT VENT CONFIGURATION

Representative drawing only, some models may vary in appearance.

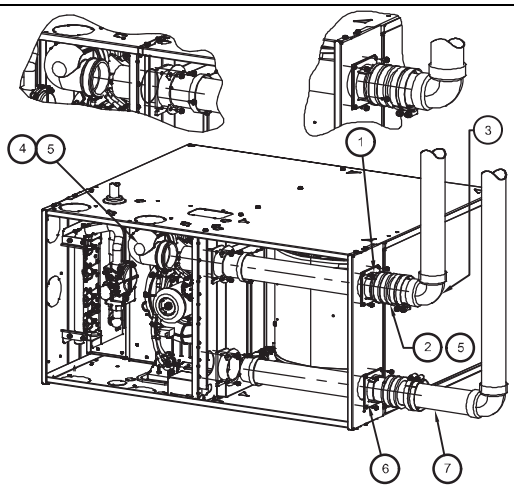

A11329

HORIZONTAL LEFT – RIGHT VENT CONFIGURATION*

* Requires accessory Internal Vent Kit

Representative drawing only, some models may vary in appearance.

* See NOTES following figures.

Figure 58	Horizontal Right Configurations

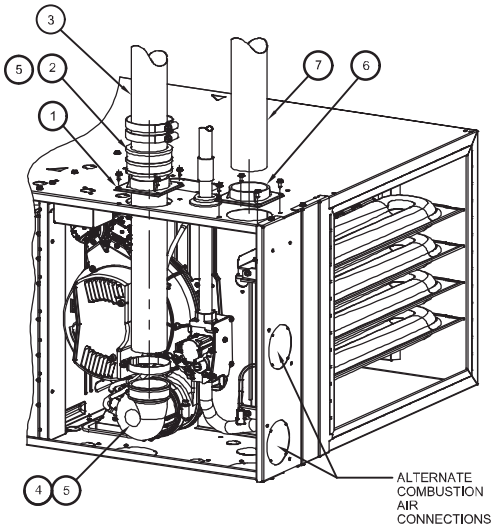

A11337

HORIZONTAL RIGHT – VERTICAL VENT CONFIGURATION

Representative drawing only, some models may vary in appearance.

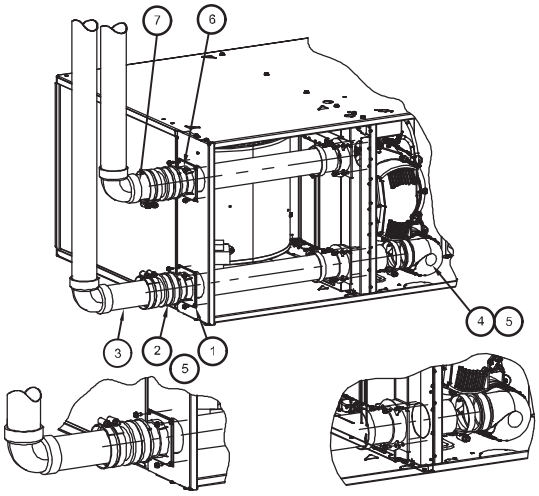

A11336

HORIZONTAL RIGHT – LEFT VENT CONFIGURATION

Representative drawing only, some models may vary in appearance.

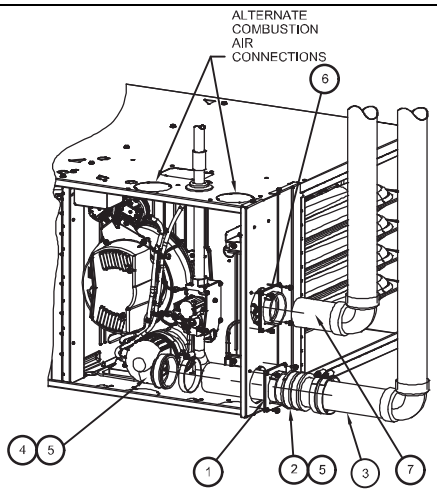

A11335

HORIZONTAL RIGHT – RIGHT VENT CONFIGURATION

Representative drawing only, some models may vary in appearance.

* See NOTES following figures.

NOTES:

1. Attach vent pipe adapter with gasket to furnace casing.
2. Align notches in rubber coupling over standoffs on adapter. Slide clamps over the coupling.
3. Slide vent pipe through adapter and coupling into vent elbow.
4. Insert vent pipe into vent elbow.
5. Torque all clamps 15–lb.–in.
6. Attach combustion air pipe adapter with gasket to furnace.
7. Attach combustion air pipe to adapter with silicone. Pilot drill a 1/8–in. Hole in adapter and secure with a #7 x 1/2–in. Sheet metal screw.

Installing the Vent Pipe Adapter and Combustion Air Pipe Adapter

⚠ WARNING

CARBON MONOXIDE POISONING HAZARD

Failure to follow this warning could result in personal injury or death.

To route the vent pipe and combustion air pipe through the furnace, the manufacturer supplied kit must be used. Failure to properly seal the blower compartment from the furnace vestibule could result in the circulation of carbon monoxide throughout the structure. The vent pipe and combustion air pipe must be a continuous pipe while passing through the blower compartment. Seals supplied in this kit must be installed per the instructions provided. Follow all procedures outlined in these instructions.

⚠ WARNING

CARBON MONOXIDE POISONING HAZARD

Failure to follow this warning could result in personal injury or death.

DO NOT use cement to join polypropylene venting systems. Follow the polypropylene venting system manufacturer's instructions for installing polypropylene venting systems.

NOTE: The rubber coupling that attaches to the vent pipe adapter must be used. The adapter seals the vent pipe to the casing and reduces the strain on the vent elbow attached to the inducer.

1. Apply the gaskets to the vent pipe and combustion air pipe adapters. If supplied, remove and discard round center "slug" from interior of gasket. See **Figure 42**.

NOTE: The vent pipe adapter can be distinguished from the inlet pipe adapter by the absence of an internal pipe-stopping ring. The vent pipe can pass through the vent pipe adapter; it cannot pass through the inlet pipe adapter.

2. Align the screw holes in the plastic vent pipe adapter with the dimples in the casing.
3. Pilot drill the screw holes for the adapter in the casing and attach the vent pipe adapter to the furnace with sheet metal screws
4. Slide the end of the rubber vent coupling with notches in it over the standoffs on the vent pipe adapter.
5. Insert a length of vent pipe through the coupling into the outlet of the vent elbow.
6. Tighten the clamp around the outlet of the vent elbow. Torque the clamp to 15 lb–in.

NOTICE

The following instructions are for PVC/ABS DWV vent piping, only. DO NOT USE THESE TECHNIQUES FOR POLYPROPYLENE VENT PIPING SYSTEMS. See the polypropylene vent system manufacturer's instructions for installing polypropylene venting systems.

Install the remaining vent and combustion air pipes as shown below. It is recommended that all pipes be cut, prepared, and preassembled before permanently cementing any joint.

1. Working from furnace to outside, cut pipe to required length(s).
2. De–burr inside and outside of pipe.
3. Chamfer outside edge of pipe for better distribution of primer and cement.
4. Clean and dry all surfaces to be joined.
5. Check dry fit of pipe and mark insertion depth on pipe.
6. Insert the vent pipe into the vent elbow.
7. Torque clamp on vent elbow 15 lb–in.
8. Torque clamp on vent coupling 15 lb–in.
9. Insert the combustion air pipe into the adapter.
10. Pilot drill a screw hole through the adapter into the combustion air pipe and secure the pipe to the adapter with sheet metal screws. DO NOT DRILL INTO POLYPROPYLENE VENT PIPES. Use an optional accessory vent coupling, if needed.
11. Seal around the combustion air pipe with silicone or foil tape. SILICONE SEALERS MAY NOT BE APPROPRIATE FOR POLYPROPYLENE VENT SYSTEMS. SEE POLYPROPYLENE VENT SYSTEM MANUFACTRUER'S INSTRUCTIONS.
12. After pipes have been cut and preassembled, apply generous layer of cement primer to pipe fitting socket and end of pipe to insertion mark. Quickly apply approved cement to end of pipe and fitting socket (over primer). Apply cement in a light, uniform coat on inside of socket to prevent buildup of excess cement. Apply second coat. DO NOT CEMENT POLYPROPYLENE FITTINGS.
13. While cement is still wet, twist pipe into socket with 1/4–in. turn. Be sure pipe is fully inserted into fitting socket.
14. Wipe excess cement from joint. A continuous bead of cement will be visible around perimeter of a properly made joint.
15. Handle pipe joints carefully until cement sets.
16. Horizontal portions of the venting system shall be supported to prevent sagging. Space combustion air piping and vent piping hangers as shown in the table below. Support pipes using perforated metal hanging strap or commercially available hangers or straps designed to support plastic pipe.

⚠ CAUTION

FURNACE RELIABILITY HAZARD

Failure to follow this caution may result in nuisance short cycling, frozen vent termination, and/or no heat.

Slope the vent and combustion air piping downward towards furnace at a minimum of 1/4–in. per linear ft. of pipe.

17. Slope the vent and combustion air piping and downward towards furnace. A minimum slope of at least 1/4 in. per linear ft.(1 in. per 4 ft.) with no sags between hangers is required. See Caution Box below.

Hanger Spacing					
Diameter	Material				
	PVC Sch 40	SDR 21 & 26	ABS	CPVC	Polypropylene
1 1/2–in.	3–ft.	2 1/2–ft.	3–ft.	3–ft.	3.25–ft.
38–mm	914–mm	762–mm	914–mm	914–mm	1000 mm
2–in.	3–ft.	3–ft.	3–ft.	3–ft.	3.25–ft.
51–mm	914–mm	914–mm	914–mm	914–mm	1000 mm
2 1/2–in.	3 1/2–ft.	3–ft.	3 1/2–ft.	3 1/2–ft.	3.25–ft.
64–mm	1067–mm	914–mm	1067–mm	1067–mm	1000 mm
3–in.	3 1/2–ft.	3–ft.	3 1/2–ft.	3 1/2–ft.	3.25–ft.
76–mm	1067–mm	914–mm	1067–mm	1067–mm	1000 mm
4–in.	4–ft.	3 1/2–ft.	4–ft.	4–ft.	3.25–ft.
102–mm	1219–mm	1067–mm	1219–mm	1219–mm	1000 mm

18. Complete the vent and combustion air pipe installation by connecting to the concentric vent or by installing the required termination elbows as shown in **Figure 49** and **Figure 50**, Alberta **Figure 46** and **Figure 48**. For ventilated combustion air terminations, refer to **Figure 60** and **Figure 61**.
19. Use appropriate methods to seal openings where combustion air pipe and vent pipe pass through roof or sidewall.

⚠ WARNING

CARBON MONOXIDE POISONING HAZARD

Failure to follow this warning could result in personal injury or death.

DO NOT use cement to join polypropylene venting systems. Follow the polypropylene venting system manufacturer's instructions for installing polypropylene venting systems.

Optional Installation of the Vent Pipe

NOTE: DO NOT USE THIS TECHNIQUE FOR POLYPROPYLENE VENTING SYSTEMS.

This option provides a disconnect point for the vent pipe. The vent pipe must be cemented to the plastic vent pipe adapter to maintain a sealed vestibule. See **Figure 43** and **Figure 44**

1. Insert a length of vent pipe through the casing into the outlet of the vent elbow.
2. Slide the plastic vent pipe adapter over the length of the vent pipe down to the furnace casing. Mark the pipe where it is flush with the outlet of the adapter.
3. Remove the pipe from the furnace and the adapter and cut off any excess pipe.
4. Clean and prime the end of the pipe that is flush with the vent adapter with a primer that is appropriate for the type of pipe being used.
5. Re–insert the pipe through the casing into the vent elbow.
6. Tighten the clamp around the outlet of the vent elbow. Torque the clamp to 15 lb–in.
7. Apply cement to the end of the pipe and to the inside of the plastic vent adapter.
8. Slide the adapter over the vent pipe and align the screw holes in the adapter with the dimples in the furnace casing.
9. Pilot drill 1/8–in. screw holes for the adapter in the casing and secure the adapter to the furnace with sheet metal screws.
10. Loosen the clamps on the rubber vent coupling.
11. Slide the end of the coupling with notches in it over the standoffs in the vent pipe adapter.
12. Tighten the clamp of the coupling over the vent pipe adapter. Torque the lower clamp around the vent pipe adapter to 15 lb–in.
13. Pilot drill a 1/8–in. hole in the combustion air pipe adapter.
14. Complete the vent and combustion air pipe as shown in "Install the Vent and Combustion Air Pipe"

NOTICE

FOR POLYPROPYLENE VENTING SYSTEMS

When using polypropylene venting systems, all venting materials used, including the vent terminations, must be from the same manufacturer.

⚠ WARNING

CARBON MONOXIDE POISONING HAZARD

Failure to follow this warning could result in personal injury or death.

DO NOT use cement to join polypropylene venting systems. Follow the polypropylene venting system manufacturer's instructions for installing polypropylene venting systems.

Figure 59 Combustion Air Pipe

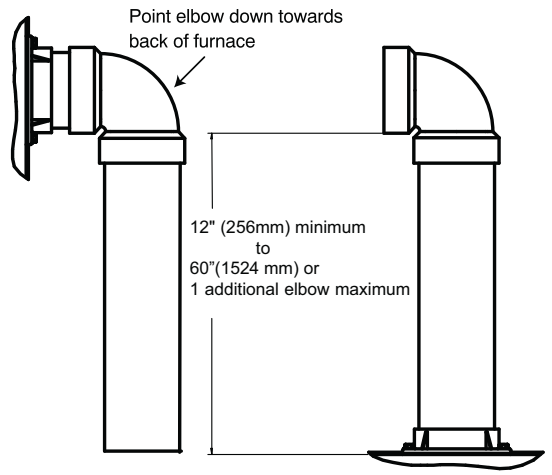

CASING SIDE OR TOP ATTACHMENT
COMBUSTION AIR PIPE
(NON-DIRECT VENT FOR ALL MODELS EXCEPT MODULATING UNLESS INSTALLED IN ATTIC OR CRAWL SPACE)

A13406

Installing the Vent Termination

Roof Terminations

A roof termination of any type will require a 4-in. (102 mm) flashing for a 2–in. (50 mm ND) concentric vent or a 5–in. (127 mm) diameter flashing for a 3-in. (80 mm ND) concentric vent

kit. For two-pipe or single pipe vent systems, a flashing for each pipe of the required diameter will be necessary.

It is recommended that the flashing be installed by a roofer or competent professional prior to installing the concentric vent. The terminations can be installed on a flat or pitched roof.

Concentric Vent

Single or multiple concentric vent must be installed as shown in **Figure 49**. Maintain the required separation distance between vents or pairs of vents as shown in **Figure 49** and all clearance shown in **Figure 62**.

WARNING

CARBON MONOXIDE POISONING HAZARD

Failure to follow this warning could result in personal injury or death.

DO NOT use cement to join polypropylene venting systems. Follow the polypropylene venting system manufacturer's instructions for installing polypropylene venting systems.

NOTE: Follow the instructions of the vent terminal manufacturer. These instructions are provided as a reference only.

Cut one 4–in. (102 mm) diameter hole for 2–in. (50 mm ND) kit, or one 5–in. (127 mm) diameter hole for 3–in. (80 mm ND) kit in the desired location.

Loosely assemble concentric vent/combustion air termination components together using instructions in kit.

Slide assembled kit with rain shield **REMOVED** through hole in wall or roof flashing.

NOTE: Do not allow insulation or other materials to accumulate inside of pipe assembly when installing it through hole.

Disassemble loose pipe fittings. Clean and cement using same procedures as used for system piping. DO NOT CEMENT POLYPROPYLENE FITTINGS.

Two–Pipe and Single–Pipe Terminations

Single and two pipe vent must be installed as shown in **Figure 49** and **Figure 50**. Maintain the required separation distance between vents or pairs of vents as shown in **Figure 49** and **Figure 50** and all clearance shown in **Figure 62** or **Figure 63**.

NOTICE

RECOMMENDED SUPPORT FOR VENT TERMINATIONS

It is recommended that rooftop vent terminations in excess of 36 inches (1.0 M) in vertical length be supported by EITHER the Direct Vent Termination Kit shown in **Table 12** or by field-supplied brackets or supports fastened to the structure.

Cut the required number of holes in the roof or sidewall for vent and (when used) combustion air pipes. Sidewall holes for two-pipe vent terminations should be side-by-side, allowing space between the pipes for the elbows to fit on the pipes.

Holes in the roof for direct–vent (two–pipe) terminations should be spaced no more than 18–in. (457 mm) apart to help avoid vent gas recirculation into combustion air intake.

Termination elbows will be installed after the vent and (if used) combustion air pipe is installed.

Sidewall Terminations

Concentric Vent

NOTE: Follow the instructions of the vent terminal manufacturer. These instructions are provided as a reference, only.

Determine an appropriate location for termination kit using the guidelines provided in section "Locating The Vent Termination" in this instruction.

1. Cut one 4–in. diameter hole for 2–in. kit, or one 5–in. diameter hole for 3–in. kit.
2. Loosely assemble concentric vent/combustion air termination components together using instructions in kit.
3. Slide assembled kit with rain shield REMOVED through hole.

NOTE: Do not allow insulation or other materials to accumulate inside of pipe assembly when installing it through hole.

4. Locate assembly through sidewall with rain shield positioned no more than 1–in. (25 mm) from wall as shown in **Figure 49**.
5. Disassemble loose pipe fittings. Clean and cement using same procedures as used for system piping. DO NOT CEMENT POLYPROPYLENE FITTINGS.

Two-Pipe and Single-Pipe Vent Termination

NOTE: Follow the instructions of the vent terminal manufacturer. These instructions are provided as a reference, only.

NOTICE

RECOMMENDED SUPPORT FOR VENT TERMINATIONS

It is recommended that side–wall vent terminations in excess of 24 inches (0.6 M) in vertical length be supported by EITHER the Direct Vent Termination Kit in **Table 12** or by field-supplied brackets or supports fastened to the structure.

Determine an appropriate location for termination kit using the guidelines provided in section "Locating The Vent Termination" in this instruction.

1. Cut two holes, one for each pipe, of appropriate size for pipe size being used.
2. Loosely install elbow in bracket (if used) and place assembly on combustion–air pipe.
3. Install bracket as shown in **Figure 46** and **Figure 48**.

NOTE: For applications using vent pipe option indicated by dashed lines in **Figure 49** and **Figure 50**, rotate vent elbow 90° from position.

4. Disassemble loose pipe fittings. Clean and cement using same procedures as used for system piping. DO NOT CEMENT POLYPROPYLENE FITTINGS.

(Direct Vent / Two-Pipe System ONLY)

When two or more furnaces are vented near each other, two vent terminations may be installed as shown in **Figure 46** and **Figure 48**, but next vent termination, or pair of vent terminations, must be at least 36–in. (914 mm) away from first two terminations. It is important that vent terminations be made as shown in **Figure 46** and **Figure 48** to avoid recirculation of gases.

Inducer Outlet Restrictor

To improve efficiency and operation of 40K, 60K, or 100K BTUH input models on very short vent systems, an inducer outlet restrictor is required to be installed on the outlet of the inducer assembly. The outlet restrictor is shown in the footnote of **Table 14** – Maximum Equivalent Vent Length. The outlet restrictor for 40K models is shipped in the loose parts bag. See **Table 14** for usage, part numbers and sourcing of 40K, 60K, and 100K inducer outlet restrictors.

To determine if the outlet restrictor is required, see **Table 14.**

Failure to use an outlet restrictor on 40K mdoels when required may result in flame disturbance or flame sense lockout.

To install the outlet restrictor:

1. Remove the vent elbow from the inducer outlet
2. Align the lock tabs on the outlet restrictor with the slots on inside outlet of the inducer assembly.
3. Snap the outlet restrictor in place.
4. Re-install the vent elbow
5. Torque vent elbow clamp 15 lb–in.

Figure 60 **Crawl Space Vent Termination**

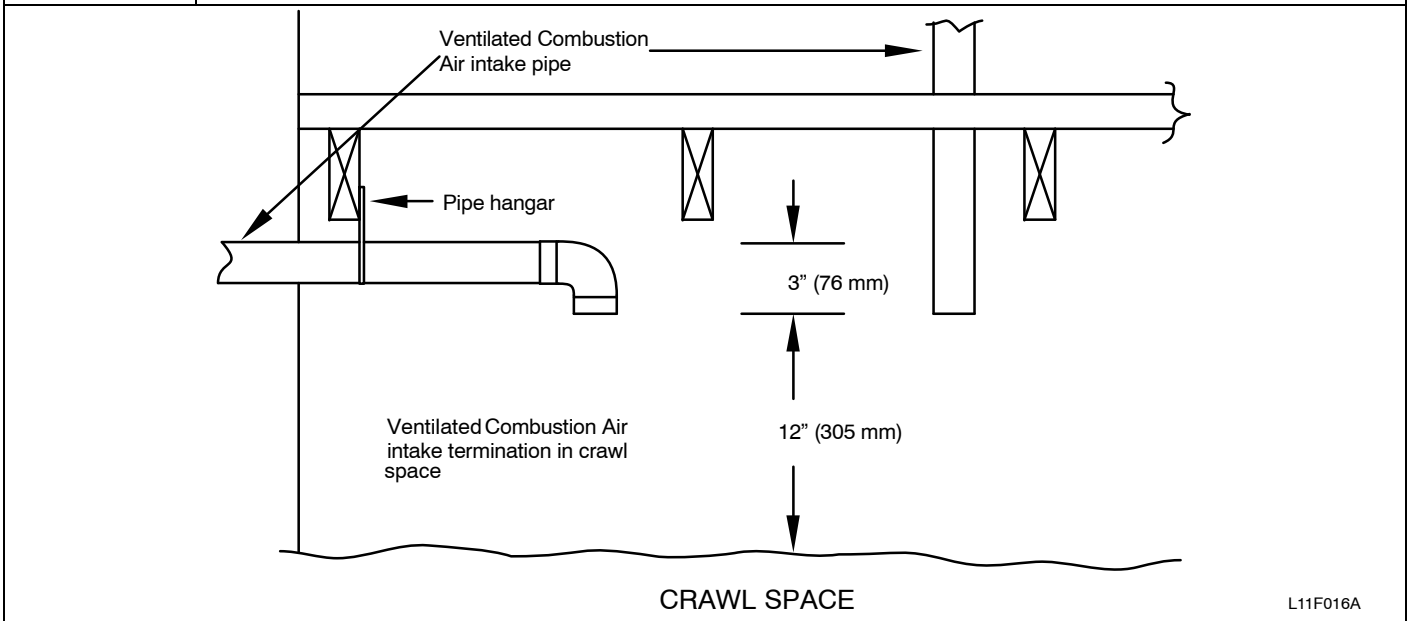

Figure 61 **Attic Vent Termination**

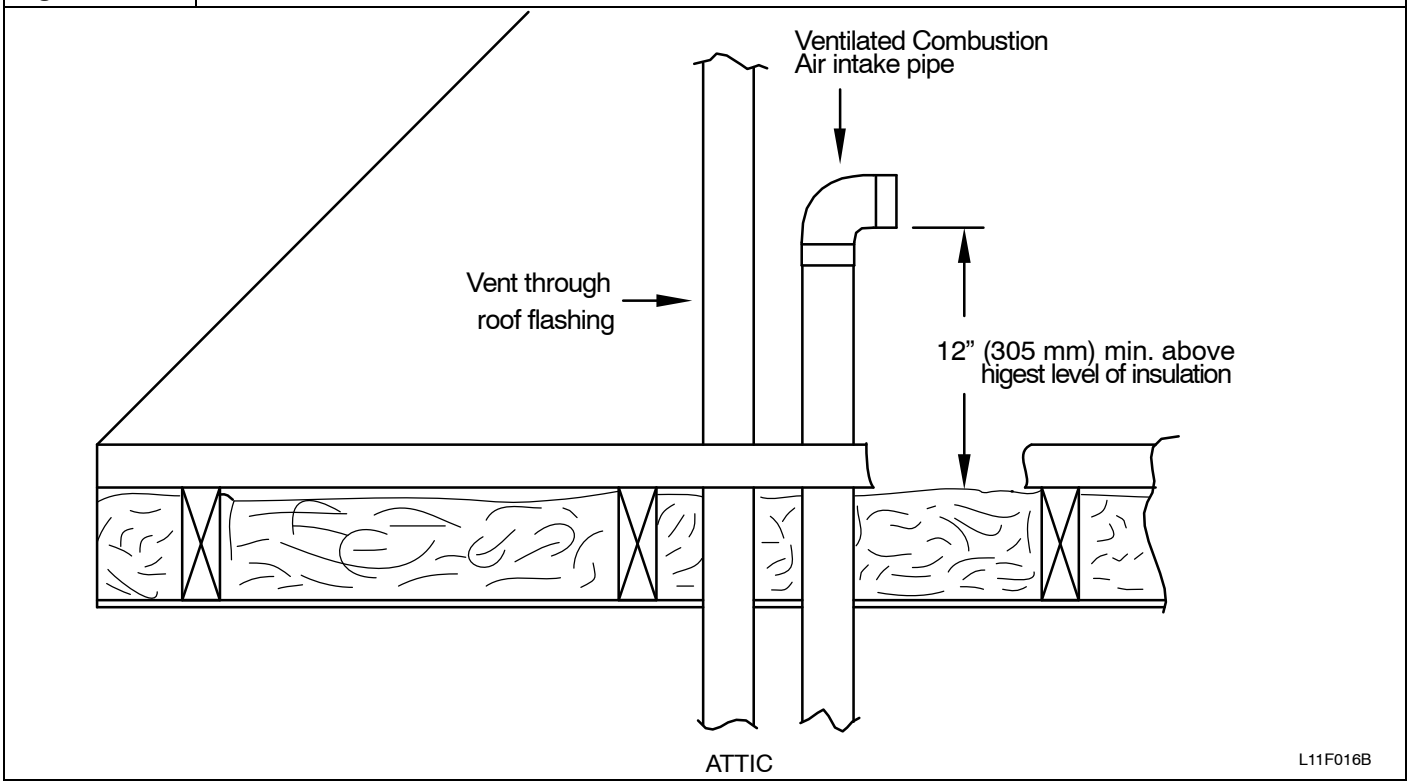

Figure 62 Direct Vent Termination Clearance

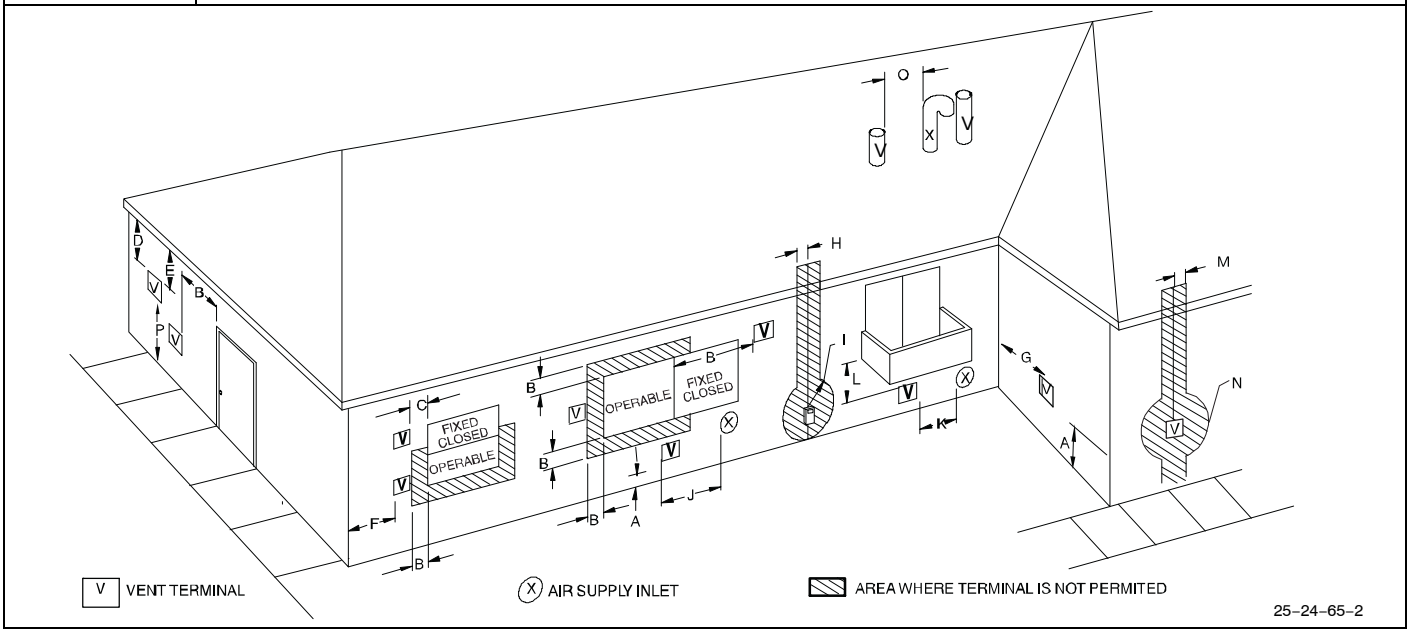

NOTE: The following is based upon National codes for gas appliances, and is provided as a reference.
Refer to Local codes which may supersede these standards and/or recommendations.

Item	Clearance Description	Canadian Installations (1) (per CAN/CSA B149.1)	U.S. Installations (2) (per ANSI Z223.1/NFPA 54)
A	Clearance above grade, veranda, porch, deck, balcony or anticipated snow level	12 in. (305 mm) 18 in. (457 mm) above roof surface.	12 in. (305 mm)
B	Clearance to a window or door that may be opened	12 in. (305 mm) for appliances >10,000 Btuh (3 kW) and </=100,000 Btuh (30 kW), 36 in. (914 mm) for appliances >100,000 Btuh (30 kW)	9 in. (229 mm) for appliances >10,000 Btuh (3 kW) and </= 50,000 Btuh (15 kW), 12 in. (305 mm) for appliances >50,000 Btuh (15kW)
C	Clearance to a permanently closed window	For clearances not specified in ANSI Z223.1/NFPA 54 or CAN/CSA B149.1, clearances shall be in accordance with local installation codes and the requirements of the gas supplier and the manufacturer's installation instructions. Manufacturer's Recommendation: See Notes 3-8.	
D	Vertical clearance to a ventilated soffit located above the terminal within a horizontal distance of 2 feet (61 cm) from the centerline of the terminal		
E	Clearance to an unventilated soffit		
F	Clearance to an outside corner		
G	Clearance to an inside corner		
H	Clearance to each side of the centerline extended above electrical meter or gas service regulator assembly	3 ft. (.9 M) within 15 ft. (4.6 M) above the meter/regulator assembly.	3 ft. (.9 M) within 15 ft. (4.6 M) above the meter/regulator assembly.
I	Clearance to service regulator vent outlet	3ft. (.9 M)	See Note 4.
J	Clearance to non—mechanical air supply inlet to building or the combustion air inlet to any other appliance	12 in. (305 mm) for appliances >10,000 Btuh(3 kW) and </= 100,000 Btuh (30 kW), 36 in. (914 mm) for appliances >100,000 Btuh (30 kW)	9 in. (9 mm) for appliances >10,000 Btuh (3 kW) and </= 50,000 Btuh (15 kW), 12 in.(305 mm) for appliances >50,000 Btuh (15kW)
K	Clearance to a mechanical air supply inlet	6 ft. (1.8 M)	3ft. (.9 M) above if within 10 ft. (3 M) horizontally
L	Clearance under a veranda, porch, deck, or balcony	12 in. (305 mm). Permitted only if veranda, porch, deck, or balcony is fully open on a minimum of two sides beneath the floor.	See Note 4. Manufacturer's Recommendation: See Notes 3-8.
M	Clearance to each side of the centerline extended above or below vent terminal of the furnace to a dryer or water heater vent, or other appliance's vent intake or exhaust	12 in. (305 mm)	12 in. (305 mm)
N	Furnace combustion air intake clearance to a water heater vent, dryer vent or other types of appliance exhausts.	3 ft. (.9 M)	3 ft. (.9 M)
0	Clearance from a plumbing vent stack	3 ft. (.9 M)	3 ft. (.9 M)
P	Clearance above paved sidewalk or paved driveway located on public property	7 ft. (2.1 M) Vent shall not terminate above a sidewalk or paved driveway that is located between two single family dwellings and serves both dwellings.	See Note 4. Manufacturer's Recommendation: See Notes 3-8.

> greater than, ≥ greater than or equal to, < less than, ≤ less than or equal to

Notes:

1. In accordance with the current CAN/CSA B149.1, Natural Gas and Propane Installation Code.
2. In accordance with the current ANSI Z223.1/NFPA 54, National Fuel Gas Code
3. ***NOTE: This table is based upon National codes for gas appliances, and are provided as a reference.***
   Refer to Local codes which may supersede these standards and/or recommendations.
4. For clearances not specified in ANSI Z223.1/NFPA 54 or CAN/CSA B 149.1, clearances shall be in accordance with local installation codes and the requirements of the gas supplier and the manufacturer's installation instructions.
5. When locating vent terminations, consideration must be given to prevailing winds, location, and other conditions which may cause recirculation of the combustion products of adjacent vents. Recirculation can cause poor combustion, inlet condensate problems, vent termination icing, and/or accelerated corrosion of the heat exchangers.
6. Design and position vent outlets to avoid ice build-up on and moisture damage to surrounding surfaces.
7. The vent for this appliance shall not terminate:
   a. Near soffit vents of crawl space vents or other areas where condensate or vapor could create a nuisance or hazard or property damage; or
   b. Where condensate vapor could cause damage or could be detrimental to the operation of regulators, relief valves, or other equipment.
8. Avoid venting under a deck or large overhang. Recirculation could occur and cause performance or system problems. Ice build-up may occur.

Figure 63 Other than Direct Vent Clearance – Ventilated Combustion Air Option

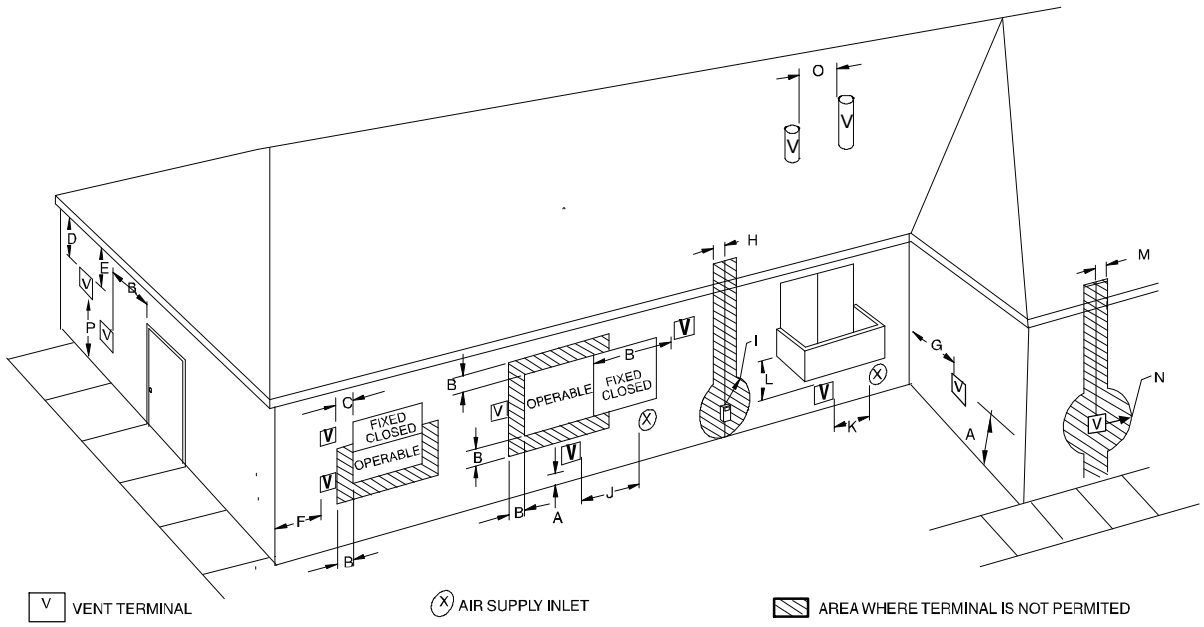

NOTE: The following is based upon National codes for gas appliances, and is provided as a reference.
Refer to Local codes which may supersede these standards and/or recommendations.

Item	Clearance Description	Canadian Installations (1) (per CAN/CSA B149.1)	U.S. Installations (2) (per ANSI Z223.1/NFPA 54)
A	Clearance above grade, veranda, porch, deck, balcony or anticipated snow level	12 in. (305 mm) 18 in. (457 mm) above roof surface.	12 in. (305 mm)
B	Clearance to a window or door that may be opened	12 in. (305 mm) for appliances >10,000 Btuh (3 kW) and </=100,000 Btuh (30 kW), 36 in. (914 mm) for appliances >100,000 Btuh (30 kW)	4ft. (1.2M) below or to the side of the opening, 1 ft (.3M) above the opening. Manufacturer's Recommendation: See Note 8.
C	Clearance to a permanently closed window	For clearances not specified in ANSI Z223.1/NFPA 54 or CAN/CSA B149.1, clearances shall be in accordance with local installation codes and the requirements of the gas supplier and the manufacturer's installation instructions. Manufacturer's Recommendation: See Notes 3-8.	
D	Vertical clearance to a ventilated soffit located above the terminal within a horizontal distance of 2 feet (61 cm) from the centerline of the terminal		
E	Clearance to an unventilated soffit		
F	Clearance to an outside corner		
G	Clearance to an inside corner		
H	Clearance to each side of the centerline extended above electrical meter or gas service regulator assembly	3 ft. (.9 M) within 15 ft. (4.6 M) above the meter/regulator assembly.	3 ft. (.9 M) within 15 ft. (4.6 M) above the meter/regulator assembly.
I	Clearance to service regulator vent outlet	3ft. (.9 M)	See Note 4.
J	Clearance to non—mechanical air supply inlet to building or the combustion air inlet to any other appliance	12 in. (305 mm) for appliances >10,000 Btuh(3 kW) and </= 100,000 Btuh (30 kW), 36 in. (914 mm) for appliances >100,000 Btuh (30 kW)	4ft. (1.2M) below or to the side of the opening, 1 ft (.3M) above the opening. Manufacturer's Recommendation: See Note 8
K	Clearance to a mechanical air supply inlet	6 ft. (1.8 M)	3ft. (.9 M) above if within 10 ft. (3 M) horizontally
L	Clearance under a veranda, porch, deck, or balcony	12 in. (305 mm). Permitted only if veranda, porch, deck, or balcony is fully open on a minimum of two sides beneath the floor.	See Note 4. Manufacturer's Recommendation: See Notes 3-8.
M	Clearance to each side of the centerline extended above or below vent terminal of the furnace to a dryer or water heater vent, or other appliance's direct vent intake or exhaust	12 in. (305 mm)	12 in. (305 mm)
N	Clearance to a moisture exhaust duct (dryer vent, spa exhaust, etc.)	12 in. (305 mm) See Note 4.	12 in. (305 mm) See Note 4.
0	Clearance from a plumbing vent stack	3 ft. (.9 M)	3 ft. (.9 M)
P	Clearance above paved sidewalk or paved driveway located on public property	7 ft. (2.1 M). Vent shall not terminate above a sidewalk or paved driveway that is located between two single-family dwellings and serves both dwellings.	7ft. (2.1M)

> greater than, ≥ greater than or equal to, < less than, ≤ less than or equal to

Notes:

1. In accordance with the current CAN/CSA B149.1, Natural Gas and Propane Installation Code.
2. In accordance with the current ANSI Z223.1/NFPA 54, National Fuel Gas Code
3. ***NOTE: This table is based upon National codes for gas appliances, and are provided as a reference.***
   Refer to Local codes which may supersede these standards and/or recommendations.
4. For clearances not specified in ANSI Z223.1/NFPA 54 or CAN/CSA B 149.1, clearances shall be in accordance with local installation codes and the requirements of the gas supplier and the manufacturer's installation instructions.
5. When locating vent terminations, consideration must be given to prevailing winds, location, and other conditions which may cause recirculation of the combustion products of adjacent vents. Recirculation can cause poor combustion, inlet condensation problems, vent termination icing, and/or accelerated corrosion of the heat exchangers.
6. Design and position vent outlets to avoid ice build-up on and moisture damage to surrounding surfaces.
7. The vent for this appliance shall not terminate:
   a. Near soffit vents of crawl space vents or other areas where condensate or vapor could create a nuisance or hazard or property damage; or
   b. Where condensate vapor could cause damage or could be detrimental to the operation of regulators, relief valves, or other equipment.
8. These National standards apply to all non-direct-vent gas appliances. Contact Local code officials for additional requirements and/or exclusions.

Table 14 MAXIMUM EQUIVALENT VENT LENGTH - Feet (Meters)

Note: *Maximum Equivalent Vent Length (MEVL) does NOT include elbows or terminations*
*Use **Table 15** – DEDUCTIONS FROM MEVL to determine allowable vent length for each application.*

Two-Stage, Variable PWM - Feet/inches

	Unit Size	40,000[1]			60,000[2]				80,000					100,000[3]				120,000		
Altitude (feet)	Pipe Dia. (in)	1 ½	2	2 ½	1 ½	2	2 ½	3	1 ½	2	2 ½	3	4	2	2 ½	3	4	2 ½	3	4
	0-2000	40	155	185	20	100	175	200	15	55	130	175	200	20	80	175	200	10	75	185
	2001-3000	35	150	175		95	165	185	10	49	125	165	185	15	75	165	185		70	175
	3001-4000	30	135	160	16	90	155	175			115	155	175			155	175	5	65	165
	4001-4500	25	130	155	15	85	150	170		44	110	150	165	10	70		170	N/A	60	160
	4501-5000		125	145		80	145	165				145	160		65	150	165			
	5001-6000	20	120	130		75	140	155		41	100	135	150			140	155			155
	6001-7000	15	110	120	13	70	130	145	N/A	38	90	125	140		60	135	145		50	140
	7001-8000	10	100	110	10	65	120	135		36		120	125	N/A	55	125	135		46	130
	8001-9000		90	95	5	60	115	125		33	80	110	115		50	115	125		43	120
	9001-10000	5	80	85	N/A	55	105	115		30	75	100	105		45	100	115		39	115

Two-Stage, Variable PWM - Meters/mm

	Unit Size	40,000[1]			60,000[2]				80,000					100,000[3]				120,000		
Altitude (meters)	Pipe Dia. (mm)	38	51	64	38	51	64	76	38	51	64	76	102	51	64	76	102	64	76	102
	0-610	12.1	47.2	56.3	6.0	30.4	53.3	60.9	4.5	16.7	39.6	53.3	60.9	6.0	24.3	53.3	60.9	3.0	22.8	56.3
	611-914	10.6	45.7	53.3		28.9	50.2	56.3	3.0	14.9	38.1	50.2	56.3	4.5	22.8	50.2	56.3		21.3	53.3
	915-1219	9.1	41.1	48.7	4.8	27.4	47.2	53.3			35.0	47.2	53.3			47.2	53.3	1.5	19.8	50.2
	1220-1370	7.6	39.6	47.2	4.5	25.9	45.7	51.8		13.4	33.5	45.7	50.2	3.0	21.3		51.8	NA	18.2	48.7
	1371-1524		38.1	44.1		24.3	44.1	50.2				44.1	48.7		19.8	45.7	50.2			
	1525-1829	6.0	36.5	39.6		22.8	42.6	47.2		12.4	30.4	41.1	45.7			42.6	47.2			47.2
	1830-2134	4.5	33.5	36.5	3.9	21.3	39.6	44.1	NA	11.5	27.4	38.1	42.6		18.2	41.1	44.1		15.2	42.6
	2135-2438	3.0	30.4	33.5	3.0	19.8	36.5	41.1		10.9		36.5	38.1	NA	16.7	38.1	41.1		14.0	39.6
	2439-2743		27.4	28.9	1.5	18.2	35.0	38.1		10.0	24.3	33.5	35.0		15.2	35.0	38.1		13.1	36.5
	2744-3048	1.5	24.3	25.9	NA	16.7	32.0	35.0		9.1	22.8	30.4	32.0		13.7	30.4	35.0		11.8	35.0

1. 40K inducer outlet restrictor
   Inducer Outlet Restrictor disk (PN 1185623; 1.25-in (32-mm) dia.) shipped in the loose parts bag or available through FAST Parts and is required under 10-ft (3.0-m) TEVL in all orientations. Required for installations from 0 to 2000 ft. (0 to 610 M) above sea level. Failure to use an outlet restrictor may result in flame disturbance or flame sense lock–out.
2. 60K inducer outlet restrictor
   Inducer Outlet Restrictor disk (PN 1185623; 1.25-in (32-mm) dia.) available through FAST Parts and is required for no greater than 5-ft (1.5-m) TEVL in downflow and horizontal orientations only. Required for installations from 0 to 2000 ft. (0 to 610 M) above sea level.
3. 100K inducer outlet restrictor
   Inducer Outlet Restrictor disk (PN 1188589; 1.50-in (38-mm) dia.) available through FAST Parts and is required for no greater than 5-ft (1.5-m) TEVL in downflow and horizontal orientations only. Required for installations from 0 to 2000 ft. (0 to 610 M) above sea level.

Table 15 DEDUCTIONS FROM MAXIMUM EQUIVALENT VENT LENGTH - Feet (Meters)

Pipe Diameter (in):	1-1/2		2		2-1/2		3		4	
Mitered 90º Elbow	8	(2.4)	8	(2.4)	8	(2.4)	8	(2.4)	8	(2.4)
Medium Radius 90º Elbow	5	(1.5)	5	(1.5)	5	(1.5)	5	(1.5)	5	(1.5)
Long Radius 90º Elbow	3	(0.9)	3	(0.9)	3	(0.9)	3	(0.9)	3	(0.9)
Mitered 45º Elbow	4	(1.2)	4	(1.2)	4	(1.2)	4	(1.2)	4	(1.2)
Medium Radius 45º Elbow	2.5	(0.8)	2.5	(0.8)	2.5	(0.8)	2.5	(0.8)	2.5	(0.8)
Long Radius 45º Elbow	1.5	(0.5)	1.5	(0.5)	1.5	(0.5)	1.5	(0.5)	1.5	(0.5)
Tee	16	(4.9)	16	(4.9)	16	(4.9)	16	(4.9)	16	(4.9)
Concentric Vent Termination	NA		0	(0.0)	NA		0	(0.0)	NA	
Standard Vent Termination	0	(0.0)	0	(0.0)	0	(0.0)	0	(0.0)	0	(0.0)

NOTES:

1. Use only the smallest diameter pipe possible for venting. Over–sizing may cause flame disturbance or excessive vent terminal icing or freeze–up.
2. NA = Not allowed. Pressure switch will not close, or flame disturbance may result.
3. Not all furnace families include 140,000 BTUH input models.
4. Vent sizing for Canadian installation over 4500 ft. (1370 m) above sea level are subject to acceptance by local authorities having jurisdiction.
5. Size both the combustion air and vent pipe independently, then use the larger size for both pipes.
6. Assume two 45° degree elbows equal one 90° degree elbow. Wide radius elbows are desirable and may be required in some cases.
7. Elbow and pipe sections within the furnace casing and at the vent termination should not be included in vent length or elbow count.
8. The minimum pipe length is 5 (1.5) linear feet (meters) for all applications.
9. Use 3–in (76 mm) diameter vent termination kit for installations requiring a 4–in (102 mm) diameter pipe.

Figure 64 Elbows Configurations

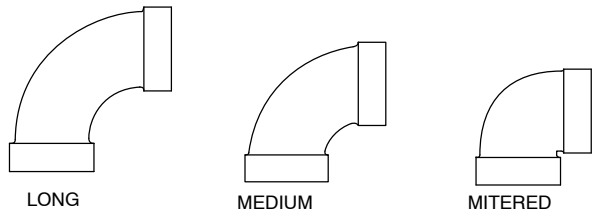

L11F082

Figure 65 Vent Terminal Configurations

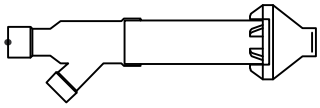

CONCENTRIC

L11F083

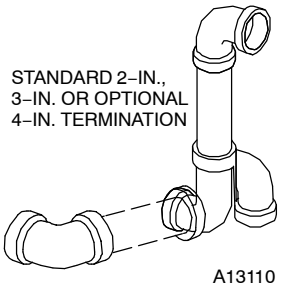

A13110

Venting System Length Calculations

The Total Equivalent Vent Length for EACH combustion air or vent pipe equals the length of the venting system, plus the equivalent length of elbows used in the venting system from **Table 15**.
Standard vent terminations or factory accessory concentric vent terminations count for zero deduction.
See vent system manufacturer's data for equivalent lengths of flexible vent pipe or other termination systems. DO NOT ASSUME that one foot of flexible vent pipe equals one foot of straight PVC/ABS DWV vent pipe.
Compare the Total Equivalent Vent Length to the Maximum Equivalent Vent Lengths in **Table 14.**

Example 1

A direct-vent 60,000 BTUH furnace installed at 2100 ft. (640M). Venting system includes **FOR EACH PIPE:**
70 feet (22 M) of vent pipe, 65 feet (20 M) of combustion air inlet pipe, (3) 90º long-radius elbows, (2) 45º long-radius elbows, and a factory accessory concentric vent kit.

Can this application use 2" (50 mm ND) PVC/ABS DWV vent piping?

Measure the required linear length of air inlet and vent pipe; insert the longest of the two here					70 ft. (22 M)	Use length of the longer of the vent or air inlet piping system
Add equiv length of (3) 90º long-radius elbows (use the highest number of elbows for either the vent or inlet pipe)	3	x	3 ft. (0.9 M)	=	9 ft. (2.7 M)	From **Table 15**
Add equiv length of (2) 45º long-radius elbows (use the highest number of elbows for either the vent or inlet pipe)	2	x	1.5 ft. (0.5 M)	=	3 ft. (0.9 M)	From **Table 15**
Add equiv length of factory concentric vent term					0 ft.	From **Table 15**
Add correction for flexible vent pipe, if any					0 ft.	From Vent Manufacturer's instructions; zero for PVC/ABS DWV
Total Equivalent Vent Length (TEVL)					82 ft. (25 M)	Add all of the above lines
Maximum Equivalent Vent Length (MEVL)					95 ft. (29 M)	For 2" pipe from **Table 14**
Is TEVL less than MEVL?					**YES**	**Therefore, 2" pipe MAY be used**

Example 2

A direct-vent 60,000 BTUH furnace installed at 2100 ft. (640M). Venting system includes **FOR EACH PIPE:**
100 feet (30 M) of vent pipe, 95 feet (29 M) of combustion air inlet pipe, (3) 90º long-radius elbows, and a polypropylene concentric vent kit. Also includes 20 feet (6.1 M) of flexible polypropylene vent pipe, included within the 100 feet (30 M) of vent pipe.

VERIFY FROM POLYPROPYLENE VENT MANUFACTURER'S INSTRUCTIONS for the multiplier correction for flexible vent pipe.

Can this application use 60mm o.d. (2") polypropylene vent piping? If not, what size piping can be used?

Measure the required linear length of **RIGID** air inlet and vent pipe; insert the longest of the two here: 100 ft. Of rigid pipe – 20 ft. Of flexible pipe				=	80 ft. (24 M)	Use length of the longer of the vent or air inlet piping system
Add equiv length of (3) 90º long-radius elbows (use the highest number of elbows for either the vent or inlet pipe)	3	x	5 ft. (1.5 M)	=	15 ft. (4.6 M)	Example from polypropylene vent manufacturer's instructions, Verify from vent manufacturer's instructions.
Add equiv length of 45º long-radius elbows (use the highest number of elbows for either the vent or inlet pipe)	0	x		=	0 ft. (0 M)	
Add equiv length of factory concentric vent term	9	x	3.3 ft (0.9 M)	=	30 ft. (9 M)	
Add correction for flexible vent pipe, if any	2*	x	20 ft. (6.1 M)	=	40 ft. (12.2 M)	
* VERIFY FROM VENT MANUFACTURER'S INSTRUCTIONS; For example only, assume 1 meter of flexible 60mm (2") or 80mm (3") polypropylene pipe equals 2 meters (6.5 ft.) of PVC/ABS pipe.						
Total Equivalent Vent Length (TEVL)					165 ft. (50 M)	Add all of the above lines
Maximum Equivalent Vent Length (MEVL)					95 ft. (29 M)	For 2" pipe from **Table 14**
Is TEVL less than MEVL?					**NO**	**Therefore, 60mm (2") pipe may NOT be used; try 80mm (3")**
Maximum Equivalent Vent Length (MEVL)					185 ft. (57 M)	For 3" pipe from **Table 14**
Is TEVL less than MEVL?					**YES**	**Therefore, 80mm (3") pipe MAY be used**

Table 16 — Maximum Allowable Exposed Vent Length Tables – Two–Stage

Maximum Allowable Exposed Vent Length in Unconditioned Space (Feet)

Winter Design Temp °F	Unit Size	40,000* BTUH									60,000 BTUH											
		Uninsulated			3/8-in. Insulation			1/2-in. Insulation			Uninsulated				3/8-in. Insulation				1/2-in. Insulation			
	Pipe Dia. in.	1 ½	2	2 ½	1 ½	2	2 ½	1 ½	2	2 ½	1 ½	2	2 ½	3	1 ½	2	2 ½	3	1 ½	2	2 ½	3
	20	20	20	20	20	50	45	20	60	50	20	30	30	25	20	75	65	60	20	85	75	65
	0	10	5	5	20	25	20	20	30	25	15	15	10	10	20	40	30	25	20	45	40	30
	-20	5			20	15	10	20	20	15	10	5			20	25	20	15	20	30	25	20
	-40				15	10	5	15	15	10	5				20	15	15	10	20	20	15	10

Winter Design Temp °F	Unit Size	80,000 BTUH														
		Uninsulated					3/8-in. Insulation					1/2-in. Insulation				
	Pipe Dia. in.	1 ½	2	2 ½	3	4	1 ½	2	2 ½	3	4	1 ½	2	2 ½	3	4
	20	15	40	40	35	30	15	50	90	75	65	15	50	70	70	70
	0	15	20	15	10	5	15	50	45	35	30	15	50	50	40	35
	-20	15	10	5			15	35	30	20	15	15	40	30	25	15
	-40	10	5				15	25	20	15	5	15	30	25	20	10

Winter Design Temp °F	Unit Size	100,000 BTUH											
		Uninsulated				3/8-in. Insulation				1/2-in. Insulation			
	Pipe Dia. in.	2	2 ½	3	4	2	2 ½	3	4	2	2 ½	3	4
	20	20	50	40	35	20	80	95	80	20	80	105	90
	0	20	20	15	10	20	55	45	35	20	65	55	45
	-20	15	10	5		20	35	30	20	20	45	35	25
	-40	10	5			20	25	20	10	20	30	25	15

Winter Design Temp °F	Unit Size	120,000 BTUH									140,000* BTUH								
		Uninsulated			3/8-in. Insulation			1/2-in. Insulation			Uninsulated			3/8-in. Insulation			1/2-in. Insulation		
	Pipe Dia. in.	2 ½	3	4	2 ½	3	4	2 ½	3	4	2 ½	3	4	2 ½	3	4	2 ½	3	4
	20	10	50	40	10	75	95	10	75	105	5	55	50	5	65	105	5	65	125
	0	10	20	15	10	55	45	10	65	50	5	25	15	5	65	50	5	65	60
	-20	10	10		10	35	25	10	45	30	5	10	5	5	45	30	5	50	40
	-40	10	5		10	25	15	10	30	20	5	5		5	30	20	5	35	25

* Not all families have these models

Maximum Allowable Exposed Vent Length in Unconditioned Space (Metric)

Winter Design Temp °C	Unit Size	40,000* BTUH									60,000 BTUH											
		Uninsulated			3/8-in. Insulation			1/2-in. Insulation			Uninsulated				3/8-in. Insulation				1/2-in. Insulation			
	Pipe Dia. mm	38	51	64	38	51	64	38	51	64	38	51	64	76	38	51	64	76	38	51	64	76
	-7	6.1	6.1	6.1	6.1	15.2	13.7	6.1	18.3	15.2	6.1	9.1	9.1	7.6	6.1	22.9	19.8	18.3	6.1	25.9	22.9	19.8
	-18	3.0	1.5	1.5	6.1	7.6	6.1	6.1	9.1	7.6	4.6	4.6	3.0	3.0	6.1	12.2	9.1	7.6	6.1	13.7	12.2	9.1
	-29	1.5			6.1	4.6	3.0	6.1	6.1	4.6	3.0	1.5			6.1	7.6	6.1	4.6	6.1	9.1	7.6	6.1
	-40				4.6	3.0	1.5	4.6	4.6	3.0	1.5				6.1	4.6	4.6	3.0	6.1	6.1	4.6	3.0

Winter Design Temp °C	Unit Size	80,000 BTUH														
		Uninsulated					3/8-in. Insulation					1/2-in. Insulation				
	Pipe Dia. mm	38	51	64	76	102	38	51	64	76	102	38	51	64	76	102
	-7	4.6	12.2	12.2	10.7	9.1	4.6	15.2	27.4	22.9	19.8	4.6	15.2	21.3	21.3	21.3
	-18	4.6	6.1	4.6	3.0	1.5	4.6	15.2	13.7	10.7	9.1	4.6	15.2	15.2	12.2	10.7
	-29	4.6	3.0	1.5			4.6	10.7	9.1	6.1	4.6	4.6	12.2	9.1	7.6	4.6
	-40	3.0	1.5				4.6	7.6	6.1	4.6	1.5	4.6	9.1	7.6	6.1	3.0

Winter Design Temp °C	Unit Size	100,000 BTUH											
		Uninsulated				3/8-in. Insulation				1/2-in. Insulation			
	Pipe Dia. mm	51	64	76	102	51	64	76	102	51	64	76	102
	-7	6.1	15.2	12.2	10.7	6.1	24.4	28.9	24.4	6.1	24.4	32.0	27.4
	-18	6.1	6.1	4.6	3.0	6.1	16.8	13.7	10.7	6.1	19.8	16.7	13.7
	-29	4.6	3.0	1.5		6.1	10.7	9.1	6.1	6.1	13.7	10.7	7.6
	-40	3.0	1.5			6.1	7.6	6.1	3.0	6.1	9.1	7.6	4.6

Winter Design Temp °C	Unit Size	120,000 BTUH									140,000* BTUH								
		Uninsulated			3/8-in. Insulation			1/2-in. Insulation			Uninsulated			3/8-in. Insulation			1/2-in. Insulation		
	Pipe Dia. mm	64	76	102	64	76	102	64	76	102	64	76	102	64	76	102	64	76	102
	-7	3.0	15.2	12.2	3.0	22.9	28.9	3.0	22.9	32.0	1.5	16.7	15.2	1.5	19.8	32.0	1.5	19.8	38.1
	-18	3.0	6.1	4.6	3.0	16.8	13.7	3.0	19.8	15.2	1.5	7.6	4.6	1.5	19.8	15.2	1.5	19.8	18.3
	-29	3.0	3.0		3.0	10.7	7.6	3.0	13.7	9.1	1.5	3.0	1.5	1.5	13.7	9.1	1.5	15.2	12.2
	-40	3.0	1.5		3.0	7.6	4.6	3.0	9.1	6.1	1.5	1.5		1.5	9.1	6.1	1.5	35	7.6

* Not all families have these models

Copyright 2017 International Comfort Products
Lewisburg, TN 37091 USA
Specifications subject to change without notice.