Arcoaire®
Air Conditioning & Heating

DLC4(A/H)6 – Outdoor
DLF4(A/H)6 – Indoor
Product Specifications

DUCTLESS HIGH WALL SPLIT SYSTEM, R–410A

Efficient 16 SEER Air Conditioners and
Up to 8.6 HSPF Heat Pumps

3/4 thru 2 Ton

- Inverter driven compressors in all models
- Wireless remote standard for enhanced functionality
- Timer
- Sleep mode
- Diagnostics
- Auto-Swing louvers
- Compressor lockout protection
- 115 volt on 3/4 and 1 ton models
- Factory charged with R-410A refrigerant
- Indoor temperature control range is from to 62°F to 84°F (16.7°C to 28.9°C).
- Cooling low ambient control feature allows operation down to 5°F (-15°C) on size 12K - 24K, 230 volt models.
- 7 year limited compressor, 5 year limited coil and parts warranties

DLF4(A/H)

DLC4(A/H)09–12

DLC4(A/H)18–24

AHRI CERTIFIED™ www.ahridirectory.org

Use of the AHRI Certified TM Mark indicates a manufacturer's participation in the program. For verification of certification for individual products, go to www.ahridirectory.org .

C ETL LISTED US

PERFORMANCE DATA							
Model Numbers		Cooling			High Heating 47°F		Low Heating 17°F
Outdoor Unit	Indoor Unit	Capacity (Btuh)	EER	SEER	Capacity (Btuh)	HSPF	Capacity (Btuh)
DLC4A609J1A	DLF4A609J1A	9,000	12.0	16.0	-	-	-
DLC4A612J1A	DLF4A612J1A	11,800	9.4	16.0	-	-	-
DLC4A612K1A	DLF4A612K1A	12,000	9.8	16.0	-	-	-
DLC4A618K1A	DLF4A618K1A	18,000	11.1	16.0	-	-	-
DLC4A624K1A	DLF4A624K1A	22,000	10.0	16.0	-	-	-
DLC4H609J1A	DLF4H609J1A	9,000	12.0	16.0	9,800	8.6	5,400
DLC4H612J1A	DLF4H612J1A	11,800	9.4	16.0	13,000	8.6	8,500
DLC4H612K1A	DLF4H612K1A	12,000	9.8	16.0	12,000	8.5	6,800
DLC4H618K1A	DLF4H618K1A	18,000	11.1	16.0	19,200	8.0	12,000
DLC4H624K1A	DLF4H624K1A	22,000	10.0	16.0	24,200	8.5	18,600

FEATURES

INVERTER TECHNOLOGY - COMFORT

The inverter driven compressor is designed to run at various input power frequencies (Hz) which controls the motor speed of the compressor.

Even Temperature – The control package, including the inverter, monitors outdoor and indoor temperatures as they relate to the selected indoor set point and adjusts the speed of the compressor to match the load and keep the system operating continuously rather than cycling and creating temperature swings. This translates to higher comfort levels for the occupants.

Rapid Pull Down/Warm-Up – Comfort is increased by the ability to the inverter system to ramp up the compressor speed enabling the system to reach the user selected room temperature set point quicker.

Humidity Control – Running the system for longer periods and continuously varying the compressor speed will enhance the humidity control.

INDIVIDUAL ROOM COMFORT

Maximum comfort is provided because each space can be controlled individually based on the usage pattern. The air sweep feature provided permits optimal room mixing to eliminate hot and cold spots for the occupant comfort.

LOW SOUND LEVELS

When noise is a concern, the ductless split systems are the answer. The indoor units are whisper quiet. There are no compressors indoors, either in the conditioned space or directly over it, and there is none of the noise usually generated by air being forced through ductwork.

When sound ordinances and proximity to neighbors demand quiet operation, the DLC4A6 unit is the right choice. With the inverter technology, these units run at lower speeds most of the time resulting in reduced sound levels.

INVERTER TECHNOLOGY – ENHANCED ECONOMICAL OPERATION

Ductless systems are inherently economical to operate. Individual rooms are heated or cooled only when required, and since the air is delivered directly to the space, there is no need to use additional energy to move the air in the ductwork. This economical operation is enhanced further when the inverter system output matches the load resulting in a more efficient system.

EASY-TO-USE CONTROLS

The high-wall systems have microprocessor-based controls to provide the ultimate in comfort and efficiency. The user friendly wireless remote control provides the interface between the user and the unit.

SECURE OPERATION

If security is an issue, outdoor and indoor units are connected only by refrigerant piping and wiring to prevent intruders from crawling through ductwork or wall openings. In addition since the DLC4(A,H)6 can be installed close to an outside wall, coils are protected from vandals and severe weather.

FAST INSTALLATION

This compact ductless split system is simple to install. A mounting bracket is standard with the indoor units and only wires and piping need to be run between the indoor and outdoor units. These units are fast and easy to install ensuring minimal disruption to customers in homes or workplace.

SIMPLE SERVICING AND MAINTENANCE

Removing the top panel on outdoor units provides immediate access to the control compartment, providing a service technician access to check unit operation. In addition, the draw-thru design of the outdoor section means that dirt accumulates on the outside surface of the coil. Coils can be cleaned quickly from the inside using a pressure hose and detergent.

On all indoor units, service and maintenance expense is reduced due to easy-to-use cleanable filters. In addition, these high wall systems have extensive self-diagnostics to assist in troubleshooting.

BUILT-IN RELIABILITY

Ductless High Wall Split System indoor and outdoor units are designed to provide years of trouble-free operation.

Both the indoor and outdoor units are well protected. Whenever the microprocessor detects abnormal conditions, the unit will stop and an error code is displayed. For a complete list of abnormal conditions that are detected refer to the Safety and Reliability section in the Standard Features and Accessories on page 4.

Inverter systems provide additional reliability due to soft start. This refers to the ability of the inverter to start the compressor motor using reduced voltage and reduced current. This feature is beneficial from an electrical standpoint (eliminates current spikes) as well as an overall reliability standpoint due to reduced stress on all associated system components.

ACCESSORIES

A condensate pump accessory is available to provide installation flexibility for those applications where gravity cannot be used to dispose of the condensate.

AGENCY LISTINGS

All systems are listed with AHRI (Air conditioning, Heating, and Refrigeration Institute) and are ETL certified per UL 1995 standard.

MODEL NOMENCLATURE											
MODEL SERIES	**D**	**L**	**C**	**4**	**A**	**6**	**0**	**9**	**J**	**1**	**A**
Position Number	**1**	**2**	**3**	**4**	**5**	**6**	**7**	**8**	**9**	**10**	**11**
DLC = Outdoor DLF = Indoor	**Outdoor/Indoor**										
4A6 = AC 4H6 = HP						**Type**					
09 = 9k BTU 12 = 12k BTU 18 = 18k BTU 24 = 24k BTU								**Size**			
J = 115–1–60 K = 208/230–1–60									**Voltage**		
1A										**Factory Designation**	

Use of the AHRI Certified TM Mark indicates a manufacturer's participation in the program For verification of certification for individual products, go to www.ahridirectory.org.

STANDARD FEATURES AND ACCESSORIES

Ease Of Installation	
Mounting Brackets	S
Low Voltage Controls	S
Comfort Features	
Microprocessor Controls	S
Wireless Remote Control	S
Rapid Cooling/Heating	S
Automatic Air Sweep	S
Cold Blow Prevention	S
Continuous Fan *	S
Auto Restart Feature	S
Memory Function	S
Auto Changeover on Heat Pumps	S
Dry Function	S
Energy Saving Features	
Inverter Driven Compressor	S
Sleep Mode	S
24 Hour Stop/Start Timer	S
Safety And Reliability	
Indoor Unit Freeze Protection	S
3 Minute Compressor Time Delay	S
High Compressor Discharge Temperature	S
Low Voltage Protection	S
Compressor Overload Protection	S
Compressor Over current Protection	S
IPM Module Protection	S
Ease Of Service And Maintenance	
Cleanable Filters	S
Diagnostic LED's On Outdoor Board	S
Error Messages Displayed Front Panel	S
Application Flexibility	
Condensate Pump	A
Standard Warranty	
7 Year Compressor Limited Warranty**	S
5 Year Parts Limited Warranty**	S

Legend
S Standard
A Accessory
O Optional
F Field Fabricated
***** Cooling Only
****** For owner occupied residential applications.
For Commercial applications, warranty is 1 year parts and 5 years compressor.

INDOOR UNITS

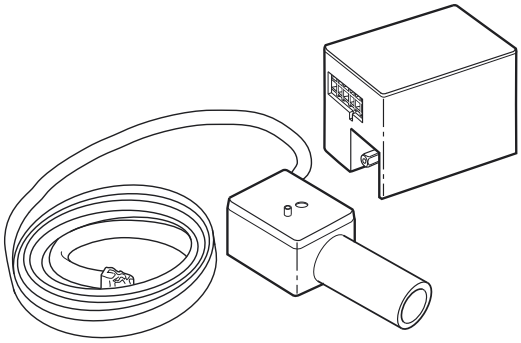

Fig. 1 – Condensate Pump Accessory

On high wall fan coils, the condensate pump accessory is recommended when adequate drain line pitch cannot be provided, or when the condensate must move up to exit.

The pump has a lift capability of 12 ft (3.6 m) on the discharge side if the pump is mounted in the fan coil or 6 ft (1.8 m) on the suction side if the pump is remote mounted.

AHRI* CAPACITY RATINGS

Model Numbers		Cooling			High Heating 47°F		Low Heating 17°F
Outdoor Unit	Indoor Unit	Capacity (Btuh)	EER	SEER	Capacity (Btuh)	HSPF	Capacity (Btuh)
DLC4A609J1A	DLF4A609J1A	9,000	12.0	16.0	-	-	-
DLC4A612J1A	DLF4A612J1A	11,800	9.4	16.0	-	-	-
DLC4A612K1A	DLF4A612K1A	12,000	9.8	16.0	-	-	-
DLC4A618K1A	DLF4A618K1A	18,000	11.2	16.0	-	-	-
DLC4A624K1A	DLF4A624K1A	22,000	10.0	16.0	-	-	-
DLC4H609J1A	DLF4H609J1A	9,000	12.0	16.0	9,800	8.6	5,400
DLC4H612J1A	DLF4H612J1A	11,800	9.4	16.0	13,000	8.6	8,500
DLC4H612K1A	DLF4H612K1A	12,000	9.8	16.0	12,000	8.5	6,800
DLC4H618K1A	DLF4H618K1A	18,000	11.1	16.0	19,200	8.0	12,000
DLC4H624K1A	DLF4H624K1A	22,000	10.0	16.0	24,200	8.5	18,600

*Air Conditioning, Heating & Refrigeration Institute
– = N/A
Legend
HSPF – Heating Seasonal Performance Factor
SEER – Seasonal Energy Efficiency Ratio
NOTES:
1. Ratings are net values reflecting the effects of circulating fan heat. Ratings are based on: Cooling Standard: 80°F (26.67°C) db, 67°F (19.44°C) wb air entering indoor unit and 95°F (35°C) db air entering outdoor unit. High Temperature Heating Standard: 70°F (21.11°C) db air entering indoor unit and 47°F (8.33°C) db, 43°F (6.11°C) wb air entering outdoor unit.
2. Ratings are based on 25 ft. (7.62 m) of interconnecting refrigerant lines.
3. All system ratings are based on fan coil units operating at high fan speed. Consult specifications physical data tables for air flows at all available fan speeds.

DIMENSIONS - INDOOR

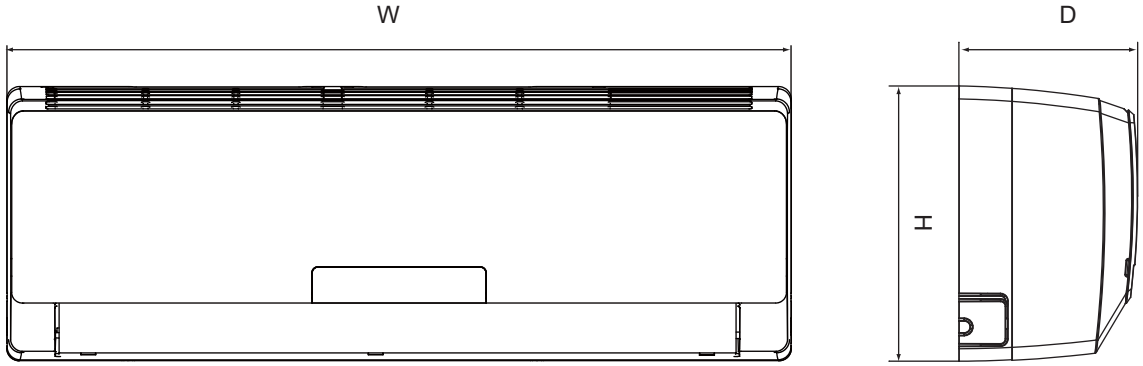

A12377

Unit Size	W In. (mm)	H In. (mm)	D In. (mm)	Net Operating Weight Lbs. (Kg)
9 K	30.3 (770)	11.1 (283)	7.9 (201)	18.7 (8.5)
12 K	30.3 (770)	11.1 (283)	7.9 (201)	19.8 (9.0)
18 K	34.0 (865)	12.0 (305)	8.5 (215)	26.4 (12)
24 K	39.7 (1008)	12.6 (319)	8.7 (221)	33.1 (15.0)

Fig. 2 – Indoor Unit Dimensions

DIMENSIONS - OUTDOOR

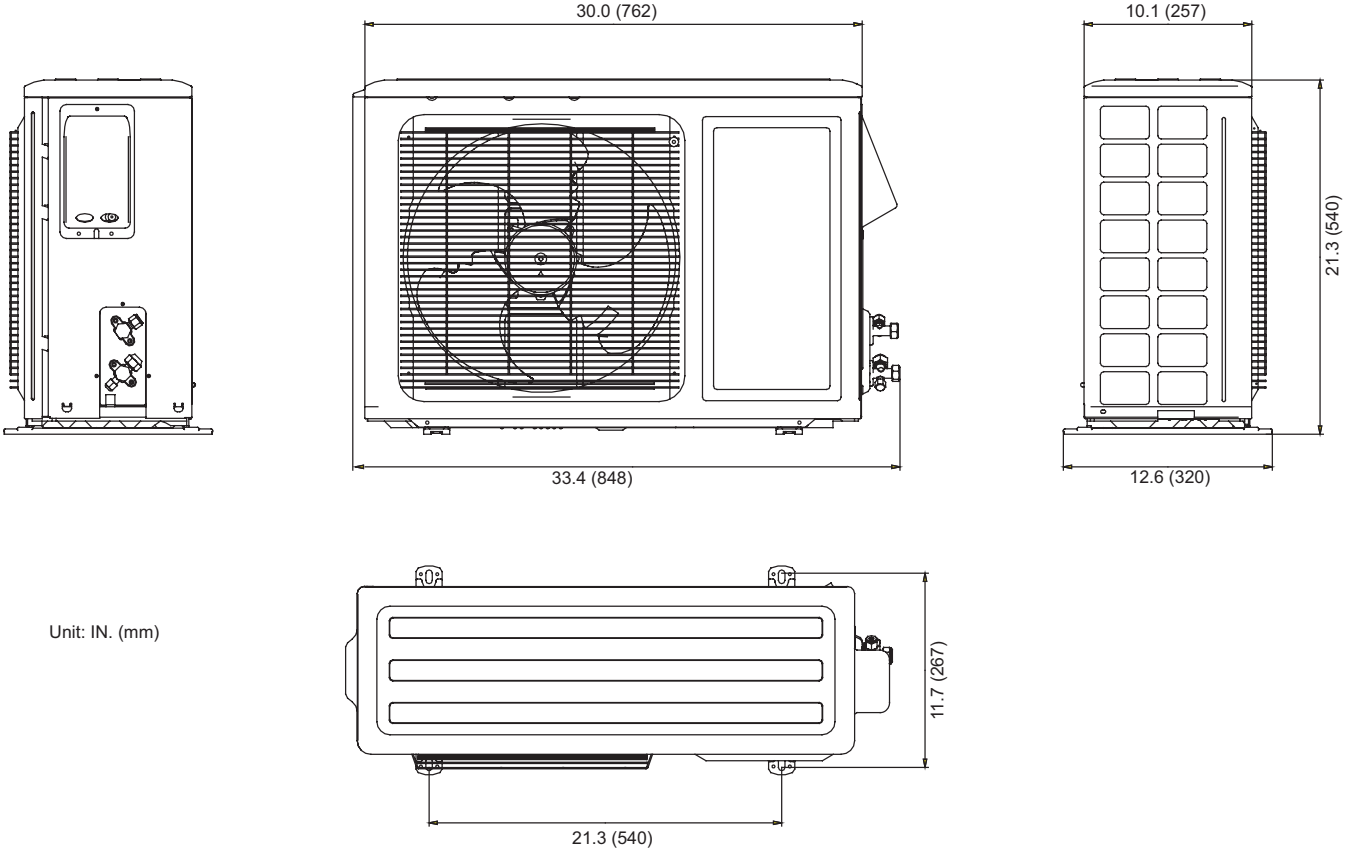

Unit: IN. (mm)

A12531

Fig. 3 – 9K and 12K 115V (Net Operating Weight: 75 lbs. / 34 kg)

DIMENSIONS - OUTDOOR CONTINUED

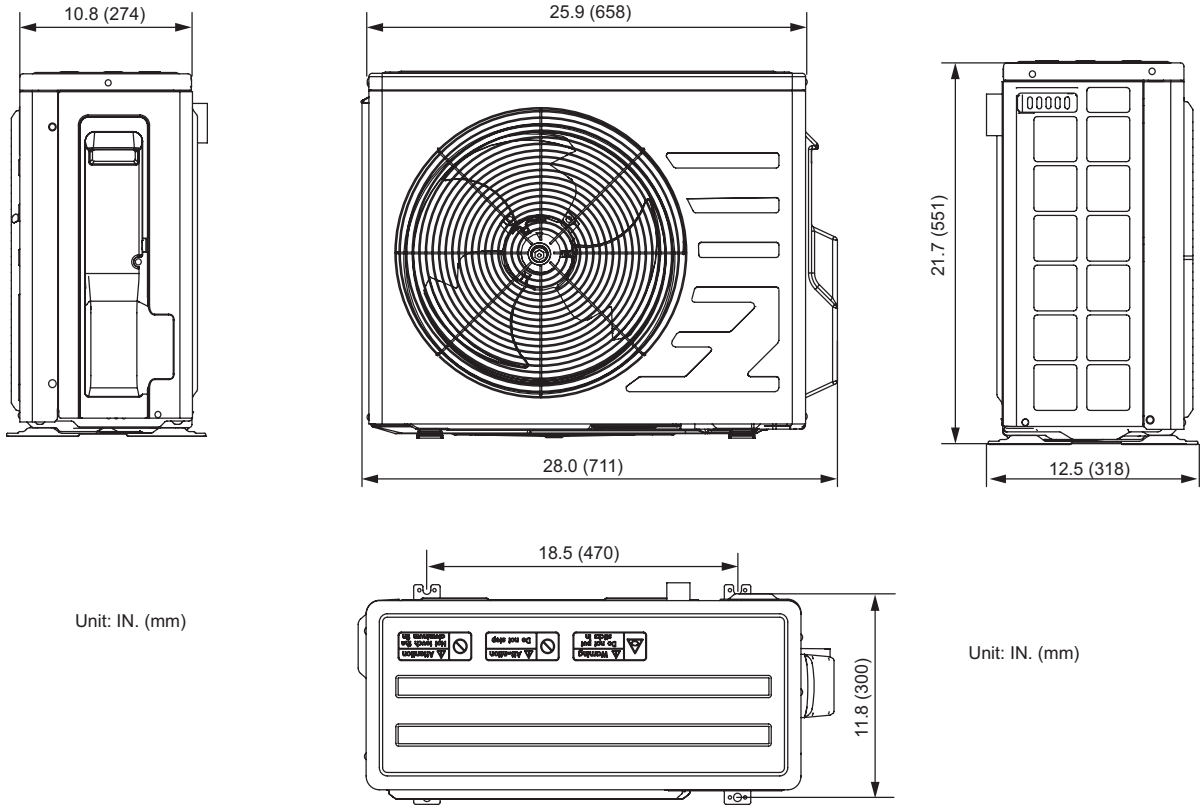

A12532

Fig. 4 – 12K 230V (Net Operating Weight: 63.8 lbs. / 30 kg)

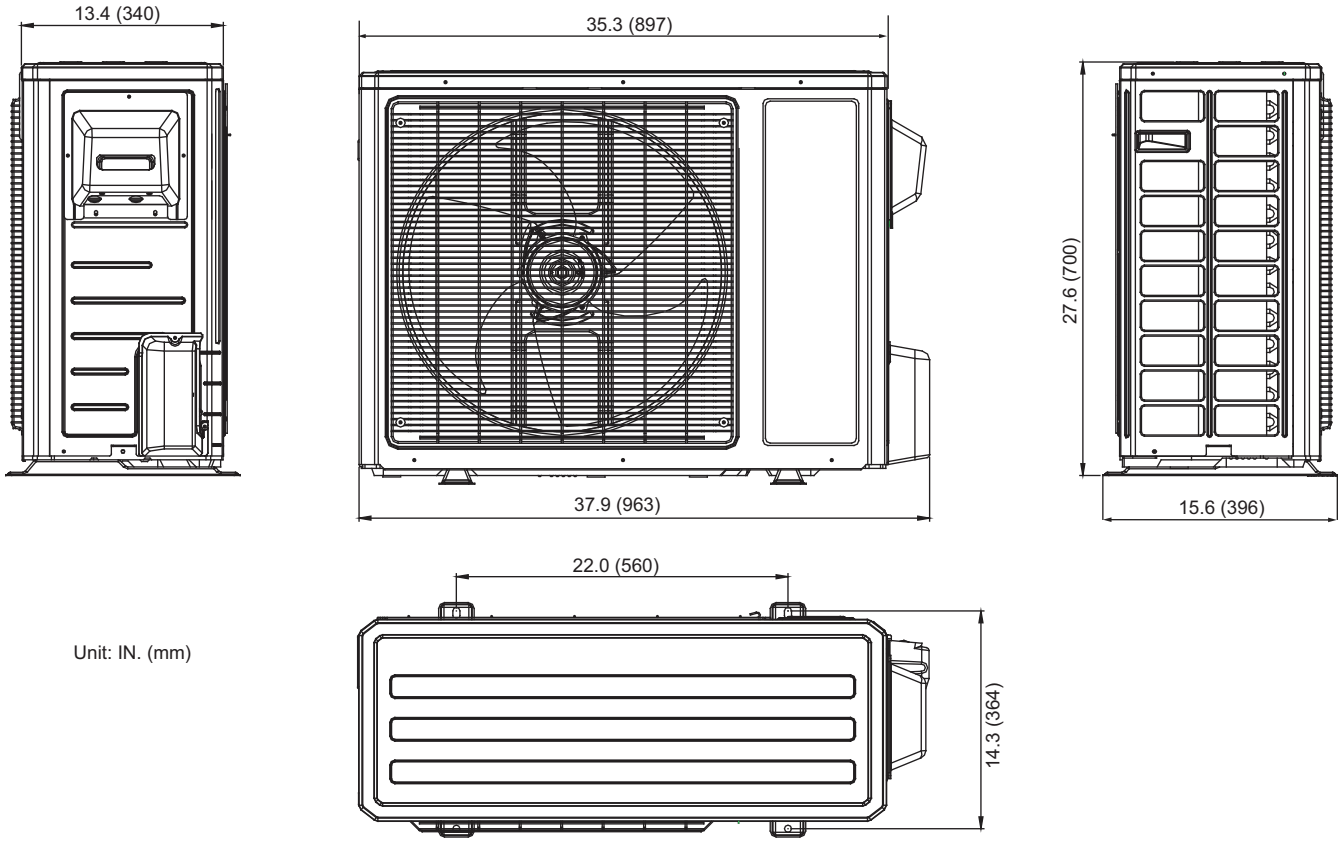

A12533

Fig. 5 – 18K and 24K (Net Operating Weight: 112.2 lbs. / 51 kg)

CLEARANCES

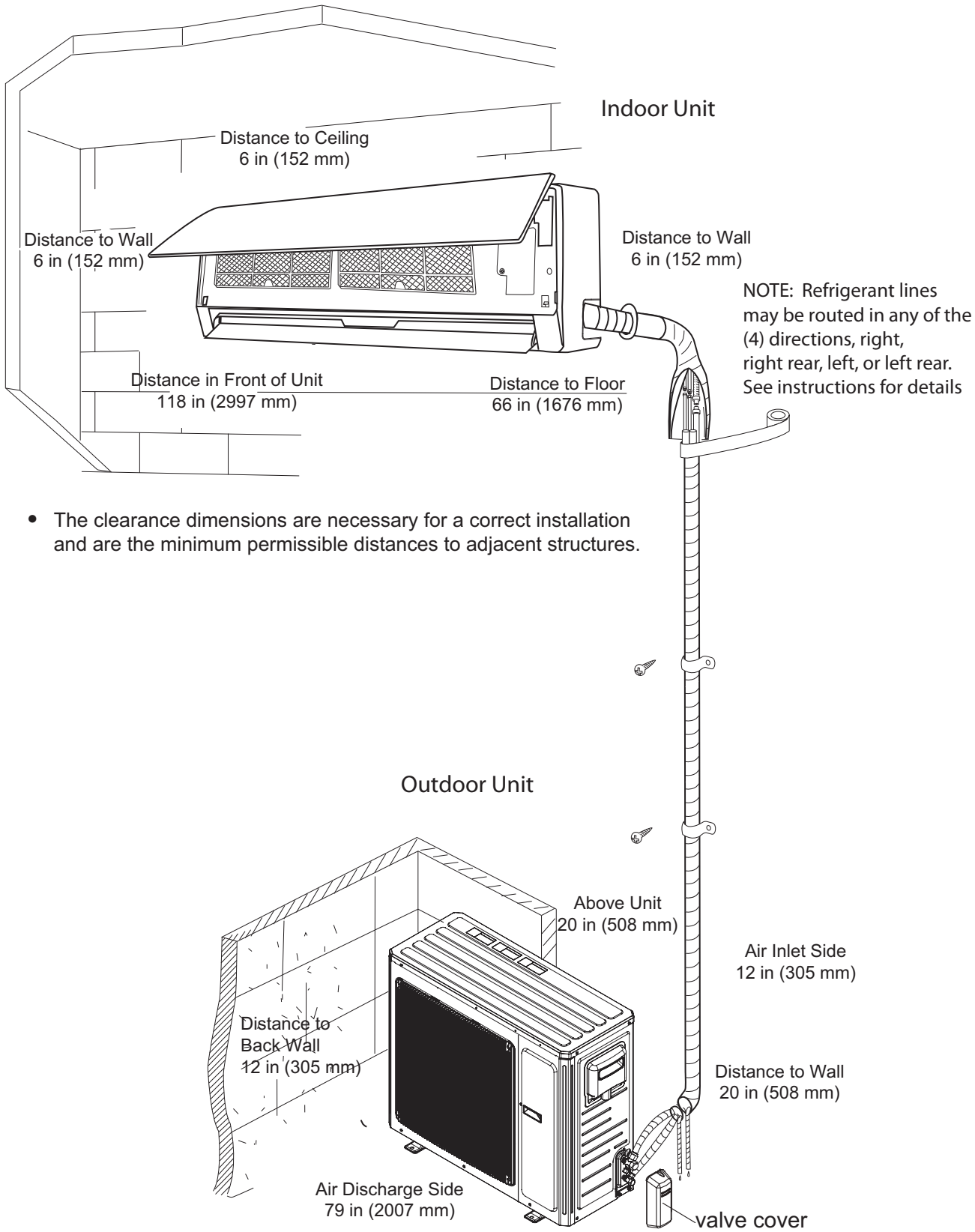

- The clearance dimensions are necessary for a correct installation and are the minimum permissible distances to adjacent structures.

Fig. 6 — Indoor and Outdoor Unit Clearances

PHYSICAL DATA - DLC4A6

Outdoor Unit DLC4A6	09	12	12	18	24
System Voltage	115-1-60		208/230-1-60		
Control Voltage	Low Voltage Pulse DC				
Rated Cooling Capacity (Btuh)	9,000	11,800	12,000	18,000	22,000
Cooling. Capacity Range Min - Max (Btuh)	3,500 - 11,000	3,300 - 12,500	3,300 - 12,500	4,500 - 21,000	6,400 - 24,000
Operating Weight lb. (kg)	75 (34)		63.8 (30)	112.2 (51)	
Refrigerant Type	R-410A				
Metering Device @ Outdoor Unit	Cap. Tube				EXV
Charge lb. (kg)	2.3 (1.05)	2.8 (1.27)	2.2 (1.0)	2.8 (1.27)	3.4 (1.55)
Compressor					
Type	Twin Rotary Inverter Driven				
Model	KNB092FHBMC		QXA-B096ZC190	SNB130FGYMC	C-6RZ146H1A
Outdoor Fan					
CFM	1060		942	1880	1880
RPM	850		880	690	690
Diameter (in)	15.7		14.6	20.5	20.5
Watts	30		21	60	
Outdoor Coil					
Face Area (sq.)	4.4		3.7	5.9	6.1
No. Rows	2				
Fins per inch	16		18		
Refrigerant Lines					
Connection Type	Flare				
Liquid (Mix Phase) in OD	1/4"				
Vapor Line in OD	3/8"			1/2"	
Maximum Length ft.	50	65	50	82	
Max Lift (Fan Coil Above) ft.	33				
Max Drop (Fan Coil Below) ft.	33				
External Finish	White				

PHYSICAL DATA CONTINUED - DLF4A6

Indoor Unit DLF4A6	09	12	12	18	24
System Voltage	115 V		208/230-1-60		
Control Voltage	Low Voltage Pulse DC				
Electrical Connections	Indoor Unit Powered From Outdoor Unit				
Rated Cooling Capacity (Btuh)	9,000	11,800	12,000	18,000	22,000
Operating Weight lb. (kg)	18.7 (8.5)	19.8 (9.0)		26.5 (12.0)	33.1 (15.0)
Refrigerant Type	R-410A				
Metering Device @ Outdoor Unit	Cap. Tube				EXV
Moisture Removal Rate (pints/hr.)	1.7	2.9	2.9	3.8	4.5
Indoor Fan					
RPM/CFM (Turbo) - Cooling	1300/330	1350/341	1350/341	1400/471	1350/588
RPM/CFM (High) - Cooling	1100/277	1150/288	1150/288	1150/400	1150/471
RPM/CFM (Medium) - Cooling	900/224	950/235	950/235	1000/330	1000/412
RPM/CFM (Low) - Cooling	700/188	750/200	750/200	850/271	850/353
Motor Watts	15			20	35
Blower Quantity … Size (DxL) in	1 … 3.62 x 23.4			1 … 3.9 x 25.6	1 … 3.9 x 30.1
Indoor Coil					
Face Area (sq.)	1.93			2.2	2.8
No. Of Rows	2				
Fins Per Inch	18				17
Filters					
Quantity	2		2	2	2
Controls	Integrated Microprocessor				
Wireless Remote	Standard				
Modes	Cool/Heat/Dry/Auto				
Fan Mode	High/Medium/Low/Auto				
Emergency Mode	Yes				
Defrost Method	Demand Defrost				
Diagnostics	Yes				
Air Sweep	Yes				
Soft Start	Yes				
Rapid Cooling/Heating	Yes				
Cold Blow Prevention	Yes				
Sleep Mode	Yes				
24 Hour Timer	Yes				
Auto Restart	Yes				
Freeze Protection On Indoor Unit	Yes				
Refrigerant Lines					
Connection Type	Flare				
Liquid (Mix Phase) in OD	1/4"				
Vapor Line in OD	3/8"			1/2"	
Maximum Length ft.	50	65	50	82	
Max Lift (Fan Coil Above) ft.	33				
Max Drop (Fan Coil Below) ft.	33				
Condensate Drain					
Size in	ID = 1/2" OD = 5/8"				
External Finish	White				

PHYSICAL DATA CONTINUED - DLC4H6

Outdoor Unit DLC4H6	09	12	12	18	24
System Voltage	115-1-60		208/230-1-60		
Control Voltage	Low Voltage Pulse DC				
Rated Cooling Capacity (Btuh)	9,000	11,800	12,000	18,000	22,000
Cooling. Capacity Range Min - Max (Btuh)	3,500 - 11,000	3,300 - 12,500	3,300 - 12,500	4,500 - 21,000	6,400 - 24,000
Rated Heating Capacity (Btuh)	9,800	13,000	12,000	19,200	24,200
Heating. Capacity Range Min - Max (Btuh)	2,500 - 11,000	3,400 - 13,500	3,400 - 13,500	4,000 - 23,000	4,100 - 26,600
Operating Weight lb (kg)	75 (34)		63.8 (30)	112.2 (51)	
Refrigerant Type	R-410A				
Metering Device @ OD Unit	Cap. Tube				EXV
Charge lb (kg)	2.2 (1.0)			2.9 (1.3)	3.4 (1.55)
Compressor					
Type	Twin Rotary Inverter Driven				
Model	KNB092FHBMC		QXA-B096ZC190	SNB130FGYMC	C-6RZ146H1A
Outdoor Fan					
CFM	1060		942	1880	1880
RPM	850		880	690	690
Diameter (in)	15.7		14.6	20.5	20.5
Watts watts	30		21	60	
Outdoor Coil					
Face Area (sq. ft)	4.4		3.7	5.9	6.1
No. Rows	2				
Fins per inch	16		18		
Refrigerant Lines					
Connection Type	Flare				
Liquid (Mix Phase) in OD	1/4"				
Vapor Line in OD	3/8"			1/2"	
Maximum Length ft	50	65	50	82	
Max Lift (Fan Coil Above) ft	33				
Max Drop (Fan Coil Below) ft	33				
External Finish	White				

PHYSICAL DATA CONTINUED - DLF4H6

Indoor Unit DLF4H6	09	12	12	18	24
System Voltage	115 V		208/230-1-60		
Control Voltage	Low Voltage Pulse DC				
Electrical Connections	Indoor Unit Powered From Outdoor Unit				
Rated Cooling Capacity (Btuh)	9,000	11,800	12,000	18,000	22,000
Rated Heating Capacity (Btuh)	9,800	13,000	12,000	19,200	24,200
Operating Weight lb (kg)	18.7 (8.5)	19.8 (9.0)		26.5 (12.0)	33.1 (15.0)
Refrigerant Type	R-410A				
Metering Device @ Outdoor Unit	Cap. Tube				EXV @ Outdoor Unit
Moisture Removal Rate(pints/hr)	1.7	2.9		3.8	4.2
Indoor Fan					
RPM/CFM (Turbo) - Cooling	1300/330	1350/341	1350/341	1400/471	1350/588
RPM/CFM (High) - Cooling	1100/277	1150/288	1150/288	1150/400	1150/471
RPM/CFM (Medium) - Cooling	900/224	950/235	950/235	1000/330	1000/412
RPM/CFM (Low) - Cooling	700/188	750/200	750/200	850/271	850/353
RPM/CFM (Turbo) - Heating	1300/330	1350/341	1350/341	1450/471	1350/588
RPM/CFM (High) - Heating	1150/277	1200/288	1200/288	1250/400	1150/471
RPM/CFM (Medium) - Heating	980/224	1000/235	1000/235	1100/330	1000/412
RPM/CFM (Low) - Heating	820/188	850/200	850/200	950/271	900/353
Motor Watts	15			20	35
Blower Quantity … Size (DxL) in	1 … 3.62 x 23.4			1 … 3.9 x 25.6	1 … 3.9 x 30.1
Indoor Coil					
Face Area (sq.ft)	1.93			2.2	4.2
No. Of Rows	2				
Fins Per Inch	18				17
Filters					
Quantity	2		2	2	2
Controls	Integrated Microprocessor				
Wireless Remote	Standard				
Modes	Cool/Heat/Dry/Auto				
Fan Mode	High/Medium/Low/Auto				
Emergency Mode	Yes				
Defrost Method	Demand Defrost				
Diagnostics	Yes				
Air Sweep	Yes				
Soft Start	Yes				
Rapid Cooling/Heating	Yes				
Cold Blow Prevention	Yes				
Sleep Mode	Yes				
24 Hour Timer	Yes				
Auto Restart	Yes				
Freeze Protection On Indoor Unit	Yes				
Refrigerant Lines					
Connection Type	Flare				
Liquid (Mix Phase) in OD	1/4"				
Vapor Line in OD	3/8"			1/2"	
Maximum Length ft	50	65	50	82	
Max Lift (Fan Coil Above) ft	33				
Max Drop (Fan Coil Below) ft	33				
Condensate Drain					
Size in	ID = 1/2" OD = 5/8"				
External Finish	White				

UNIT MOUNTING (INDOOR)

Mounting template – The fan coil units are furnished with mounting bracket to hang the unit and mark the location of the wiring, and refrigeration line hole locations.

Support – Adequate support must be provided to handle the weight of all fan coils. Refer to the Physical Data section for weights, and the base unit dimensional drawings for the location of mounting bracket.

Unit Leveling – For reliable operation, units should be level in all planes.

Clearances – Minimum clearance as shown in Fig. 6.

Unit location – Select a location which will provide the best air circulation for the room. These units should be positioned as high as possible on the wall for the best air circulation. The unit return and discharge should not be obstructed by furniture, curtains, or anything which may cause the unit to short cycle or air to recycle. Place the unit in the middle of the selected wall (if possible). Use an outside wall, if available, to make piping easier, and place the unit so it faces the normal location of room occupants.

UNIT MOUNTING (OUTDOOR)

Support – A location which can bear the weight of outdoor unit. Refer to the Physical Data section for weights, and base dimensional drawings.

Unit Leveling – For reliable operation, units should be level in all planes.

Clearances – Minimum clearances, as shown in Fig. 6, must be provided for airflow. The outdoor units are designed for free-blow applications. Air inlets and outlets should not be restricted.

Unit location – A location which is convenient to installation and not exposed to strong wind. If unit is exposed to strong winds, it is recommended that a wind baffle be used. Do not install the outdoor or indoor units in a location with special environmental conditions.

SYSTEM OPERATING CONDITIONS

OPERATING RANGE

Unit Size	Cooling Outdoor Min - Max °F (°C)	Heating Outdoor Min - Max °F (°C)
09	64.4 - 113 (18 - 45)	5 - 75 (-15 - 23.9)
12 (115v)		
12 (230v)	5 - 109 (-15 - 42.8)	
18	5 - 118 (-15 - 47.8)	19 - 75 (-7.2 - 23.9)
24	5 - 114.8 (-15 - 46)	19.4 - 75.2 (-7 - 24)

METERING DEVICES

These units have either a capillary tube or a EXV in the outdoor units as listed in the Physical Data tables.

REFRIGERANT LINES

Routing – Refrigerant lines can be routed in any of the four directions shown in Fig. 7.

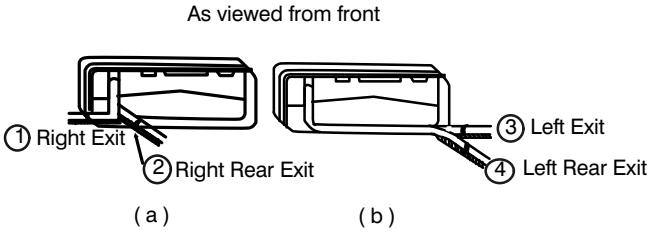

Fig. 7 – Refrigerant Line Routing

A08281

General Guidelines:

1. The DLC4(A,H)6 units are shipped with full charge of R-410A refrigerant. All charges, line sizing, and capacities are based on runs of 25ft (7.6 m). For runs over 25ft (7.6 m), consult long line section for charge adjustments.
2. Refrigerant lines should not be buried in the ground. If it is necessary to bury the lines, not more than 36 inches (914 mm) should be buried. Provide a minimum of 6 inch (152 mm) vertical rise to service valves to prevent refrigerant migration.
3. Both lines must be insulated. Use a minimum of 1/2 inch (12.7 mm) thick insulation. Closed-cell insulation is recommended in all long-line applications.
4. Special consideration should be given to isolating interconnecting tubing from the building structure. Isolate the tubing so that vibration or noise is not transmitted into the structure.

Long Line Applications:

1. No change in line sizing is required.
2. Add refrigerant per table below.

ADDITIONAL CHARGE TABLE

Unit Size	Length o f Line Set- ft. (m) 10~25 (3.1~7.6)	> 25 (7.6) Cooling	> 25 (7.6) Heat Pump	Max Allowable Length ft. (m)
	Additional Charge, oz.			
09k	0.0	0.16	0.16	50 (15)
12k 115v	0.0	0.16	0.22	65 (19)
12k 230v	0.0	0.16	0.22	50 (15)
18k	0.0	0.16	0.22	82 (25)
24k	0.0	0.16	0.22	

3. Reduction in capacity due to long lines can be calculated from the chart below.

DRAIN CONNECTIONS

Install drains to meet the local sanitation codes. If adequate gravity drainage cannot be provided, a field installed condensate pump accessory should be used. For pump lift capability, please refer to the Installation Instructions for the condensate pump accessory.

NOTE: The high wall fan coils have internal condensate trap. An external trap is not required.

Drain connections may be routed through alternate locations as shown in Fig. 8.

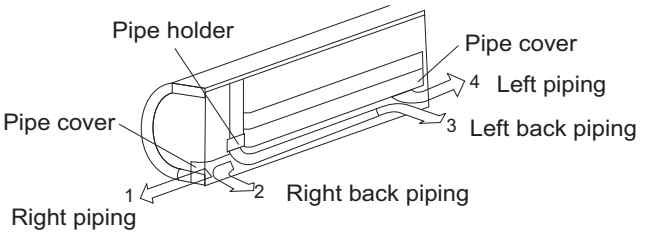

Fig. 8 – Piping Locations

WIRING

The main power is supplied to the outdoor unit. Four field supplied connecting cables provide power for the indoor unit as well the communication signal and ground between the outdoor unit and indoor unit.

CONTROL SYSTEM

The DLF4/DLC4(A,H)6 unit is equipped with a microprocessor controls to operate the system and give optimum levels of comfort and operating efficiency.

There are microprocessor boards and thermistors located in both the indoor and outdoor units. The thermistors monitor the system operation and control the operating mode. The change in the settings or the modes of operation, use the factory supplied wireless remote control.

The DLF4/DLC4(A,H)6 unit has the following operating modes:

- Fan Only
- Auto
- Heating (on Heat Pumps only)
- Cooling
- Dehumidification (Dry)

FAN ONLY - In Fan Only mode, the system filters and circulates the room air without changing the room air temperature.

AUTO - In Auto mode, the system will automatically select one of the following operating modes: cooling, heating or fan only based on the difference between the room temperature and the set point temperature.

HEATING - In the Heating mode, the system heats and filters room air.

COOLING - When in Cooling mode, the fan runs all the time and the system cools, dries and filters room air.

DEHUMIDIFICATION (DRY) - in Dehumidification (Dry) mode, the system dries, filters and slightly cools room temperature. This mode does not take place of a dehumidifier.

In addition to the above modes that are selected by using the remote control, the unit can run in emergency mode by using a manual button. This mode is used when the remote is misplaced or the batteries in the remote died. In this mode the unit will run in AUTO mode with a predetermined set point (76°F/24.4°C)

For more details on the sequence of operation please refer to the service manual for those units.

WIRELESS REMOTE CONTROL

1. A wireless remote control is supplied for system operation.
2. Each battery-operated wireless remote control may be used to control more than one unit.
3. The wireless remote control has a range of 25 ft. (7.6 m).

START-UP SEQUENCE

In both cooling and heating mode, the compressor does a soft start from 0 Hz run speed approximately 52 Hz run speed. The event takes about 55 seconds. This eliminates high in rush currents associated with fixed speed compressors and also reduces the stress on internal compressor parts typically seen with a full speed startup.

COOLING MODE

In Cooling mode, the first step in compressor speed after the soft start is a run speed of approximately 52 Hz for 150 seconds. The next step is a ramp up to approximately 78 Hz.

If, within 20 minutes, the load is satisfied at 78 Hz, the compressor will start to ramp back down in speed in an effort to track the load. If the load is not satisfied within 20 minutes, the compressor speed will ramp up to approximately 85 Hz. The compressor will operate at this speed until the load is satisfied or a maximum of 20 minutes after which the compressor will shut off for 3 minutes.

After 3 minutes the cycle repeats itself until the load is satisfied.

HEATING MODE

In Heating mode, the first step in compressor speed after the soft start is a run speed of approximately 52 Hz for 150 seconds. The next step is a ramp up to approximately 72 Hz.

If, within 25 minutes, the load is satisfied at 72 Hz, the compressor will start to ramp back down in speed in an effort to track the load. If the load is not satisfied within 25 minutes, the compressor speed will ramp up to approximately 82 Hz.

The compressor will operate at this speed until the load is satisfied or a maximum of 18 minutes after which the compressor will shut off for 3 minutes.

After 3 minutes the cycle repeats itself until the load is satisfied.

AIR THROW DATA

Unit Size	Approximate Air Throw ft. (m)			
	Low	Medium	High	Turbo
9 K	18 (5.5)	21 (6.4)	23 (7.0)	28 (8.5)
12 K	20 (6.1)	23 (7.0)	25 (7.6)	30 (9.1)
18 K	22 (6.7)	27 (8.2)	33 (10.1)	39 (11.9)
24 K	25 (7.6)	29 (8.8)	34 (10.4)	42 (12.8)

SOUND RATINGS

Outdoor Units

Model Number	Sound Power dBA	Sound Pressure dBA
DLC4A609JA1	63	53
DLC4A612JA1	65	55
DLC4A612KA1	62	52
DLC4A618KA1	66	56
DLC4A624KA1	63	53
DLC4H609JA1	63	53
DLC4H612JA1	65	55
DLC4H612KA1	62	52
DLC4H618KA1	66	56
DLC4H624KA1	66	56

Indoor Units

Model Number	Low		Medium		High		Turbo	
	Sound Power dBA	Sound Pressure dBA	Sound Power dBA	Sound Pressure dBA	Sound Power dBA	Sound Pressure dBA	Sound Power dBA	Sound Pressure dBA
DLF4A609JA1	42	32	45	35	47	37	50	40
DLF4A612JA1	42	32	45	35	47	37	50	40
DLF4A612KA1	38	28	43	33	49	39	54	44
DLF4A618KA1	44	34	48	38	53	43	58	48
DLF4A624KA1	44	34	49	39	53	43	59	49
DLF4H609JA1 (cool/heat)	42/42	32/32	45/45	35/35	47/47	37/37	50/50	40/40
DLF4H612JA1 (cool/heat)	42/42	32/32	45/45	35/35	47/47	37/37	50/50	40/40
DLF4H612KA1 (cool/heat)	38/38	28/28	43/43	33/33	49/49	39/39	54/54	44/44
DLF4H618KA1 (cool/heat)	44/44	34/34	48/48	38/38	53/53	43/43	58/58	48/48
DLF4H624KA1 (cool/heat)	44/44	34/34	49/49	39/39	53/53	43/43	59/59	49/49

NOTES:

1. Sound power ratings are per AHRI 270 and AHRI 350
2. Sound pressure ratings are estimated sound pressure, 3 feet (.91 m) from the unit, based on sound power data.

ELECTRICAL DATA

Unit Size	System Voltage Volts–Ph.–Freq.	Operating Voltage (Min/Max)	Compressor		Outdoor Fan			Indoor Fan			MCA	Max Fuse/CB Amps (MOCP)
			RLA	LRA	Volts	FLA	Output Watts	Volts	FLA	Output Watts		
9K–AC	115–1–60	103/127	9.76	25	115 AC	0.17	30	115 V–AC	0.38	15.0	13	20
9K–HP	115–1–60	103/127	9.76	20	176–375 DC	0.17	30	115 V–AC	0.38	15.0	13	20
12K–AC	115–1–60	103/127	11.20	25	115 AC	0.17	30	115 V–AC	0.38	15.0	15	25
12K–HP	115–1–60	103/127	11.20	20	176–375 DC	0.17	30	115 V–AC	0.38	15.0	15	25
12K	208/230–1–60	187/253	7.30	16.5	208/230 AC	0.25	21	208/230 V–AC	0.19	15.0	10	15
18K	208/230–1–60	187/253	10.86	27	208/230 AC	0.62	60	208/230 V–AC	0.32	20.0	15	25
24K AC	208/230–1–60	187/253	11.71	41	208/230 AC	0.62	60	208/230 V–AC	0.45	35.0	16	25
24K HP	208/230–1–60	187/253	12.50	41	208/230 AC	0.62	60	208/230 V–AC	0.45	35.0	17	25

* Permissible limits of the voltage range at which the unit will operate satisfactorily

† Indoor fan powered from outdoor unit.

LEGEND

FLA – Full Load Amps
LRA – Locked Rotor Amps
MCA – Minimum Circuit Amps
RLA – Rated Load Amps

GUIDE SPECIFICATIONS

HORIZONTAL DISCHARGE OUTDOOR UNITS

Size Range: 3/4 - 2 Ton Nominal Cooling and Heating Capacity
Model Number: **DLC4(A,H)6**

PART 1 – GENERAL

1.01 System Description

A. Outdoor air-cooled split system compressor sections suitable for on-the-ground, rooftop, wall hung or balcony mounting. Units shall consist of a variable speed rotary compressor, an air-cooled coil, propeller-type draw-through outdoor fan, reversing valve, accumulator, metering devices, and control box. Units shall discharge horizontally as shown on the contract drawings. Units shall function as the outdoor component of an air-to-air heat pump system.

B. Units shall be used in a refrigeration circuit matched to duct-free heat pump fan coil units.

1.02 Agency Listings

C. Unit construction shall comply with ANSI/ASHRAE 15, latest revision, and with NEC.

D. Units shall be evaluated in accordance with UL standard 1995.

E. Units shall be listed in CEC directory.

F. Unit cabinet shall be capable of withstanding 500-hour salt spray test per Federal Test Standard no. 141 (method 6061).

G. Air-cooled condenser coils shall be leak tested at 573 psig.

1.03 Delivery, Storage, And Handling

Units shall be shipped in one piece and shall be stored and handled per manufacturer's recommendations.

1.04 Warranty (For Inclusion By Specifying Engineer)

PART 2 – PRODUCTS

2.01 Equipment

A. General:

Factory assembled, single piece, air-cooled outdoor unit. Contained within the enclosure shall be all factory wiring, piping, controls, and compressor.

B. Unit Cabinet:

1. Unit cabinet shall be constructed of galvanized steel, bonderized and coated with baked-enamel finish on inside and outside.
2. Unit access panel should be removable with minimal screws and shall provide full access to the compressor, fan, and control components.
3. Outdoor compartment shall be isolated and have an acoustic lining to assure quiet operation.

C. Fans:

1. Outdoor fans shall be direct-drive propeller type, and shall discharge air horizontally. Fan shall draw air through the outdoor coil.
2. Outdoor fan motors shall be totally-enclosed, single phase motors with class B insulation and permanently-lubricated ball bearings. Motor shall be protected by internal thermal overload protection.
3. Shaft shall have inherent corrosion resistance.
4. Outdoor fan openings shall be equipped with PVC metal/mesh coated protection grille over fan.

D. Compressor

1. Compressor shall be fully hermetic variable speed rotary type.
2. Compressor shall be Three phase, inverter driven.
3. Compressor shall be equipped with oil system, operating oil charge, and motor.
4. Motor shall be NEMA rated class F, suitable for operation in refrigerant atmosphere.
5. Compressor assembly shall be installed on rubber vibration isolators.
6. The inverter and compressor shall be protected against over temperature and over current.

E. Outdoor Coil:

Coil shall be constructed of Aluminum fins mechanically bonded to seamless copper tubes, which are cleaned, dehydrated and sealed.

F. Refrigerant Components:

Refrigerant circuit components shall include brass external liquid line service valve with service gauge port connections, suction line service valve with service gage connection port, service gage port connections on compressor suction and discharge lines with Schrader type fittings with brass caps, accumulator, reversing valve (on heat pump units).

G. Safeties:

Operating safeties shall be factory selected, assembled, and tested. The minimum functions shall include the following:

1. Compressor discharge over temperature protection.
2. System low voltage protection.
3. Compressor overload protection.
4. Compressor over current protection.
5. IPM module protection.

H. Electrical Requirements:

1. Units shall operate on single-phase, 60Hz power at 115v for unit sizes 09 - 12, and 60Hz power at 208/3230v for unit sizes 12 - 24.
2. Unit electrical power shall be a single point connection.
3. All power and control wiring must be installed per NEC and all local electrical codes.
4. Units shall have high and low-voltage terminal block connections.

GUIDE SPECIFICATIONS

INDOOR WALL-MOUNTED DUCT-FREE UNITS

Size Range: 3/4 - 2 Ton Nominal Cooling and Heating Capacity

Model Number: **DLF4(A,H)6**

PART 1 – GENERAL

1.01 System Description

Indoor, wall-mounted, direct expansion fan coils are matched with heat pump outdoor units.

1.02 Agency Listings

Unit shall be rated per ARI Standards 210/240 and listed in the ARI directory as a matched system.

Units shall be evaluated in accordance with UL standard 1995.

Units shall be listed in CEC directory.

1.03 Delivery, Storage, And Handling

Units shall be shipped in one piece and shall be stored and handled per manufacturer's recommendations.

1.04 Warranty (For Inclusion By Specifying Engineer)

PART 2 – PRODUCTS

2.01 Equipment

A. General:

Indoor, direct-expansion, wall-mounted fan coil. Unit shall be complete with cooling/heating coil, fan, fan motor, piping connectors, electrical controls, microprocessor control system, and integral temperature sensing. Unit shall be furnished with integral wall mounting bracket and mounting hardware.

B. Unit Cabinet:

Cabinet discharge and inlet grilles shall be attractively styled, high-impact polystyrene. Cabinet shall be fully insulated for improved thermal and acoustic performance.

C. Fans:

1. Fan shall be tangential direct-drive blower type with air intake at the top of the unit and discharge at the bottom front. Automatic, motor-driven vertical air sweep shall be provided standard.
2. Air sweep operation shall be user selectable. The vertical sweep may be adjusted (using the remote control) and the horizontal air direction maybe be set manually.

D. Coil:

Coil shall be copper tube with aluminum fins and galvanized steel tube sheets. Fins shall be bonded to the tubes by mechanical expansion. A drip pan under the coil shall have a drain connection for hose attachment to remove condensate. Condensate pan shall have internal trap.

E. Motors:

Motors shall be totally enclosed, permanently lubricated ball bearing with inherent overload protection. Fan motors shall be 3-speed.

F. Controls:

Controls shall consist of a microprocessor-based control system which shall control space temperature, determine optimum fan speed, and run self diagnostics. The temperature control range shall be from 62°F to 84°F (16.7°C to 28.9°C).

The unit shall have the following functions as a minimum:

1. Automatic restart after power failure at the same operating conditions as at failure.
2. Temperature sensing control to enter set points and operating conditions.
3. Wireless infrared remote control to enter set points and operating conditions.
4. Automatic air sweep control to provide on or off activation of air sweep louvers.
5. Dehumidification mode shall provide increased latent removal capability by modulating system operation and set point temperature.
6. Fan-only operation to provide room air circulation when no cooling/heating is required.
7. Diagnostics shall provide continuous checks of unit operation and warn of possible malfunctions. Error messages shall be displayed at the unit.
8. Fan speed control shall be user-selectable: high, medium, low or microprocessor controlled automatic operation during all operating modes.

The unit shall be protected against the following:

1. Indoor coil freeze up
2. Indoor coil high temperature protection shall be provided to detect excessive indoor discharge temperature when unit is in heat pump mode.
3. Cold blow protection

G. Filters:

Units shall have filter track with factory-supplied cleanable filters.

H. Electrical Requirements:

Power is supplied from the indoor unit.

I. Operating Characteristics:

The DLF/DLC4(A,H)6 system shall have a minimum listed SEER (seasonal energy efficiency ratio) of 16 SEER at ARI conditions, and a minimum HSPF of 8.0.

J. Refrigerant Lines:

All units should have refrigerant line connections that can be oriented to connect from the left, right, or back of unit. Both refrigerant lines need to be insulated.

K. Special Features (Field Installed):

1. Condensate Pump: The condensate pump shall remove condensate from the drain pan when gravity drainage cannot be used. Pump shall be designed for quiet operation. Pump shall consist of two parts: an internal reservoir/sensor assembly, and a remote sound-shielded pump assembly. A liquid level sensor in the reservoir shall stop cooling operation if the liquid level in the reservoir is unacceptable.

Copyright 2013 International Comfort Products
Lewisburg, Tennessee 37091 USA
www.GoArcoaire.com