N95ESN

Up to 96% AFUE, Single-Stage, Multi-Speed ECM, Condensing Gas Furnace

TEMPSTAR®
Heating and Cooling Products

Product Specifications

A200105

Illustrations and photographs are only representative. Some product models may vary.

⚠ WARNING

CARBON MONOXIDE POISONING AND FIRE HAZARD

Failure to follow this warning could result in personal injury, death, and/or property damage.
This furnace is not designed for use in recreation vehicles or outdoors. This furnace is designed for use in manufactured (Mobile) homes when an optional Mobile Home accessory kit is installed.
Failure to follow this warning could result in personal injury, death, and/or property damage.

Use of the AHRI Certified TM Mark indicates a manufacturer's participation in the program. For verification of certification for individual products, go to www.ahridirectory.org .

ISO 9001 Quality

A200326

PERFORMANCE

- Fixed-speeds, constant torque (FCT) ECM blower motor for electrically efficient operation all year long in heating, cooling and continuous fan operation.
- Single-speed inducer motor, and single-stage gas valve.
- Silicon Nitride Hot Surface Igniter.
- Adjustable blower speed for heating and cooling.
- Aluminized-steel primary heat exchanger.
- Stainless-steel condensing secondary heat exchanger.

INSTALLATION FLEXIBILITY

- 4-way multipoise design for upflow, downflow or horizontal installation, with unique vent elbow for optional venting through-the-cabinet downflow venting capability.
- Factory-configured ready for upflow applications.
- Ideal height 35” (889 mm) cabinet: short enough for taller coils, but still allows enough room for service.
- Two-pipe venting, single-pipe venting or ventilated combustion air.

APPLICATIONS

- Approved for Manufactured Housing/Mobile Home applications with MH accessory kit.
- Convertible to propane with gas conversion accessory kit.

CERTIFICATIONS

- All sizes meet ENERGY STAR® Verizon 4.1 criteria for gas furnaces: 95%+ AFUE.
- Cabinet air leakage less than 2.0% at 1.0 in. W.C. and cabinet air leakage less than 1.4% at 0.5 in. W.C. when tested in accordance with ASHRAE standard 193.
- All sizes can be installed in air quality management districts with a 40 ng/J NOx emissions requirments.

EASIER TO SELL

- Up to 96% AFUE in upflow, horizontal, and up to 95% AFUE in downflow positions
- Fixed-speeds, constant torque ECM blower motor
- Supports single-stage cooling units
- Insulated heat exchanger compartment
- Cabinet air leakage less than 2.0% at 1.0 in. W.C. and cabinet air leakage less than 1.4% at 0.5 in. W.C. when tested in accordance with ASHRAE standard 193
- Approved for Twinning applications with accessory kit (601714, 801716, 802120, 1002120, 1202422, 1402422 models, only).
- Approved for Manufactured Housing/Mobile Home applications with accessory (order separately)
- All sizes can be installed in air quality management districts with a 40 ng/J NOx emissions requirement

TOUGHER

- Flame roll-out sensors standard
- Adjustable heating blower OFF delay
- Factory set blower ON delay

- Stainless steel secondary heat exchanger
- High temperature limit control designed to prevent overheating
- Direct ignition with Silicon Nitride igniter
- High quality, corrosion-resistant, prepainted steel cabinet

EASIER TO INSTALL AND SERVICE

- Direct vent (2-pipe), single-pipe venting or ventilated combustion air
- 24 VAC humidifier terminal and electronic air cleaner terminal
- 35” (889mm) high, for ease of installation
- Quarter turn knobs for easy door removal and secure attachment
- Convertible to propane with gas conversion accessory kit
- Four position - upflow/downflow/horizontal (left/right) installation
- Twelve different venting configurations
- Through the casing flue pipe for counterflow or horizontal applications with accessory (order separately)
- Concentric vent available
- Self diagnostics with super bright LED
- Slide out heat exchanger and blower assembly

LIMITED WARRANTY*

- 20 year heat exchanger limited warranty
- Lifetime heat exchanger limited warranty with timely registration
- 5 year parts limited warranty
  - With timely registration, an additional 5 year parts limited warranty
- *For residential applications only. See warranty certificate for complete details and restrictions, including warranty coverage for other applications.

FURNACE SIZE	A	B	C	D	SHIP WT. LB (KG)
	CABINET WIDTH	OUTLET WIDTH	BOTTOM INLET WIDTH	AIR INTAKE	
0261410	14-3/16 (361)	12-1/2 (319)	12-9/16 (322)	7-1/8 (181)	118.5 (53.7)
0401410	14-3/16 (361)	12-1/2 (319)	12-9/16 (322)	7-1/8 (181)	120 (54.4)
0401712	17-1/2 (445)	15-7/8 (403)	16 (406)	8-3/4 (222)	126.5 (57.4)
0601412	14-3/16 (361)	12-1/2 (319)	12-9/16 (322)	7-1/8 (181)	129 (58.5)
0601714	17-1/2 (445)	15-7/8 (403)	16 (406)	8-3/4 (222)	138.5 (62.8)
0801716	17-1/2 (445)	15-7/8 (403)	16 (406)	8-3/4 (222)	146.5 (66.4)
0802120	21 (533)	19-3/8 (492)	19-1/2 (495)	10-1/2 (267)	154.5 (70.1)
1002120	21 (533)	19-3/8 (492)	19-1/2 (495)	10-1/2 (267)	164.5 (74.6)
1002122	21 (533)	19-3/8 (492)	19-1/2 (495)	10-1/2 (267)	164.5 (74.6)
1202422	24-1/2 (622)	22-7/8 (581)	23 (584)	12-1/4 (311)	179.5 (81.4)
1402422	24-1/2 (622)	22-7/8 (581)	23 (584)	12-1/4 (311)	189 (85.7)

DIMENSIONAL DRAWING

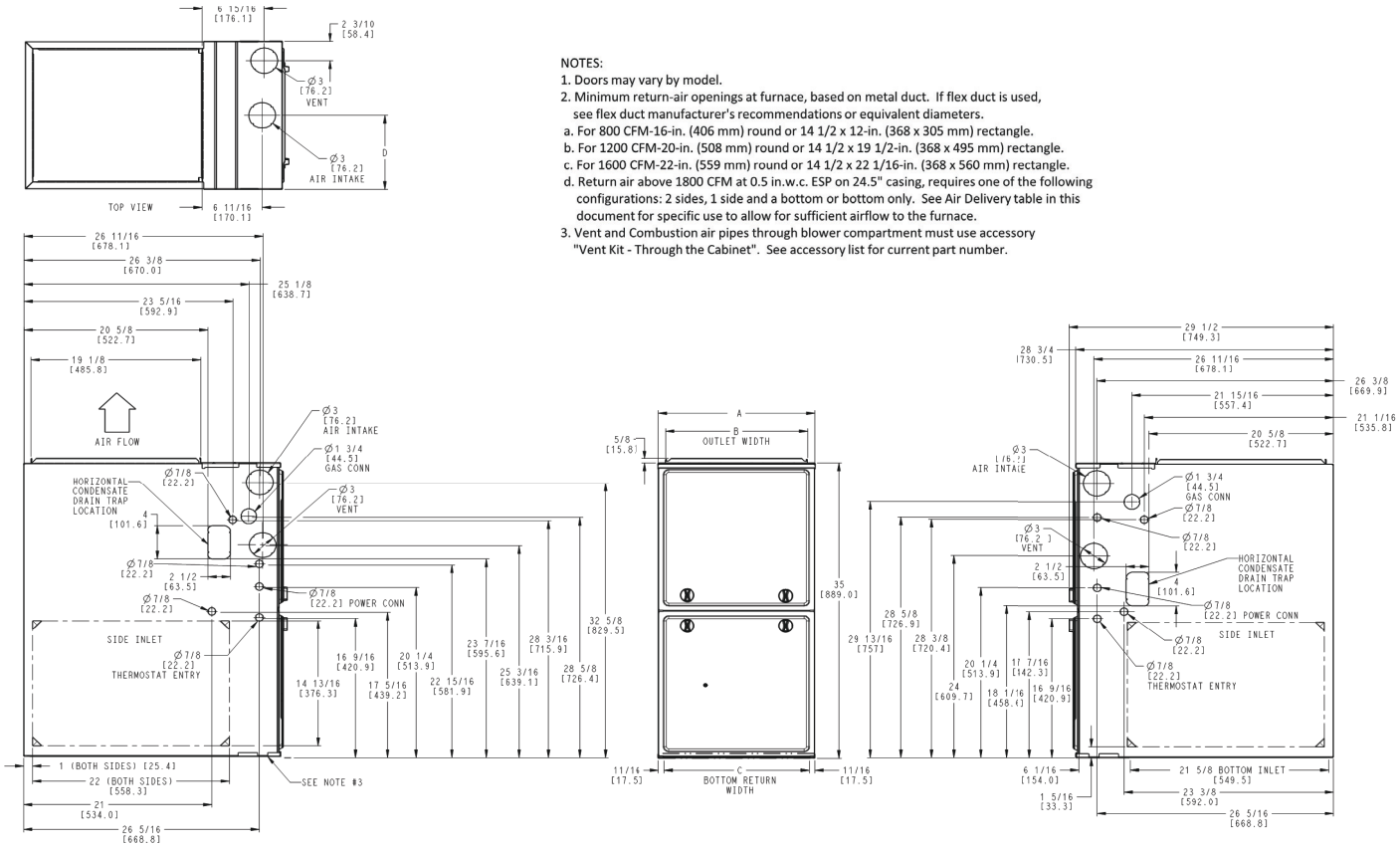

A200327

MODEL NUMBER NOMENCLATURE

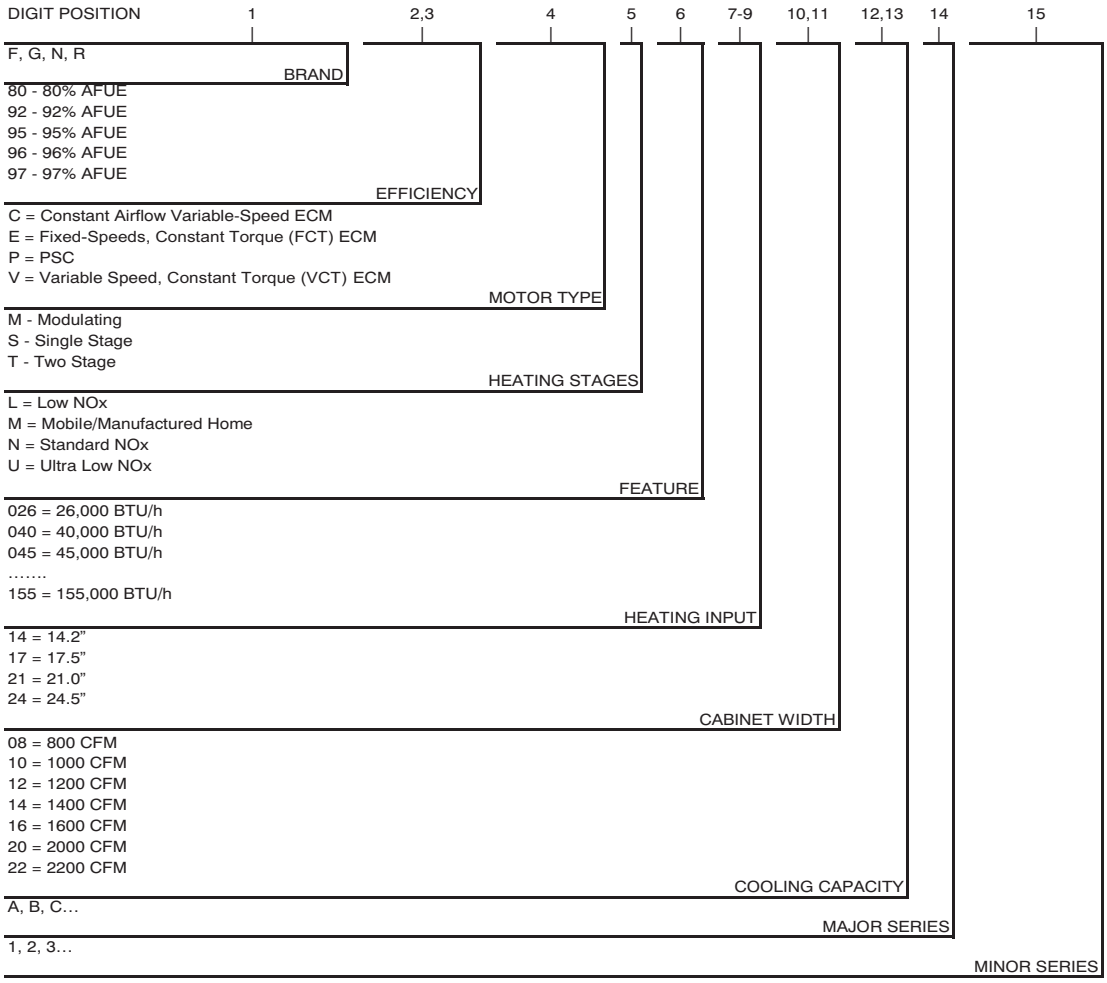

A190043

For California Residents:

If installed with a manufactured (mobile) home conversion kit in SCAQMD: This furnace does not meet the SCAQMD Rule 1111 14 ng/J NOx emission limit, and thus is subject to a mitigation fee of up to $450. This furnace is not eligible for the Clean Air Furnace Rebate Program: www.CleanAirFurnaceRebate.com

Model Number	Input (BTUH)	Efficiency AFUE		Cooling Capacity CFM range @ .5 in. w.c. (125 Pa)	Dimensions H x W x D Inches (Millimeters)	Shipping Wt. Lbs (Kg)
		Upflow/Hz	Downflow			
N95ESN0261410A	26,000	96%	95%	235 - 895	35 x 14-3/16 x 29-1/2 (889 x 361 x 750)	118.0 (53.5)
N95ESN0401410A	40,000	96%	95%	365 - 950	35 x 14-3/16 x 29-1/2 (889 x 361 x 750)	120.0 (54.4)
N95ESN0401712A	40,000	96%	95%	270 - 1010	35 x 17-1/2 x 29-1/2 (889 x 445 x 750)	126.5 (57.4)
N95ESN0601412A	60,000	95%	95%	345 - 1120	35 x 14-3/16 x 29-1/2 (889 x 361 x 750)	129.0 (58.5)
N95ESN0601714A	60,000	96%	95%	460 - 1330	35 x 17-1/2 x 29-1/2 (889 x 445 x 750)	138.5 (62.8)
N95ESN0801716A	80,000	96%	95%	935 - 1665	35 x 17-1/2 x 29-1/2 (889 x 445 x 750)	146.5 (66.5)
N95ESN0802120A	80,000	96%	95%	895 - 1855	35 x 21 x 29-1/2 (889 x 533 x 750)	154.5 (70.1)
N95ESN1002120A	100,000	96%	95%	1110 - 2125	35 x 21 x 29-1/2 (889 x 533 x 750)	164.5 (74.6)
N95ESN1002122A	100,000	96%	95%	1300 - 2065	35 x 21 x 29-1/2 (889 x 533 x 750)	164.5 (74.6)
N95ESN1202422A	120,000	96%	95%	710 - 2105	35 x 24-1/2 x 29-1/2 (889 x 622 x 750)	179.5 (81.4)
N95ESN1402422A	140,000	95%	95%	470 - 2310	35 x 24-1/2 x 29-1/2 (889 x 622 x 750)	189.0 (85.7)

Manufacturer reserves the right to change, at any time, specifications and designs without notice and without obligations.

FURNACE COMPONENTS

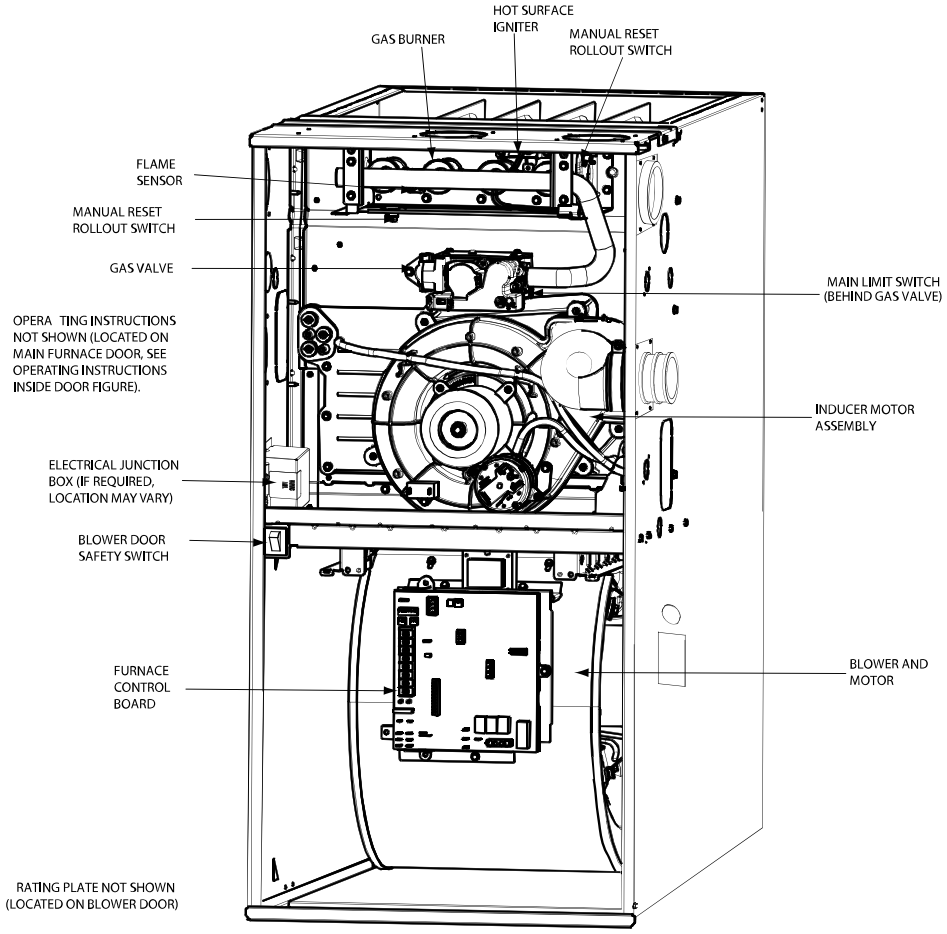

A190145

MINIMUM CLEARANCES TO COMBUSTIBLE MATERIALS

POSITION	CLEARANCE
Rear	0 (0 mm)
Front (Combustion air openings in furnace and in structure)	1 in. (25 mm)
Required for service*	24 in. (610 mm)†
All Sides of Supply Plenum*	1 in. (25 mm)
Sides	0 (0 mm)
Vent	0 (0 mm)
Top of Furnace	1 in. (25 mm)

*. Consult your local building codes
†. Recommended

PHYSICAL DATA

FURNACE SIZE		0261410	0401410	0401712	0601412	0601714	0801716	0802120	1002120	1002122	1202422	1402422
HEATING CAPACITY AND EFFICIENCY												
Input (BTUh)		26,000	40,000	40,000	60,000	60,000	80,000	80,000	100,000	100,000	120,000	140,000
Output (BTUh)		25,000	39,000	39,000	58,000	58,000	78,000	78,000	97,000	97,000	117,000	135,000
Certified Temperature Rise Range ºF (ºC)		25 - 55 (14 - 31)	40 - 70 (22 - 39)	40 - 70 (22 - 39)	45 - 75 (25 - 42)	40 - 70 (22 - 39)	40 - 70 (22 - 39)	40 - 70 (22 - 39)	40 - 70 (22 - 39)	40 - 70 (22 - 39)	40 - 70 (22 - 39)	45 - 75 (25 - 42)
AIRFLOW CAPACITY AND BLOWER DATA												
Rated External Static Pressure (in. w.c.)	Heating	0.10	0.10	0.10	0.12	0.12	0.12	0.12	0.15	0.15	0.20	0.20
	Cooling	0.50	0.50	0.50	0.50	0.50	0.50	0.50	0.50	0.50	0.50	0.50
Airflow Delivery @ Rated ESP (CFM)	Heating	605	695	650	930	1010	1325	1330	1730	1785	2020	2130
	Cooling	895	950	1010	1120	1330	1665	1855	2125	2065	2105	2310
Cooling Capacity (tons)@ 400, 350 CFM/ton	CFM/ton	2	2	2.5	2.5	3.5	4	5	5	5	5	5
	CFM/ton	2.5	2.5	3	3	4	4.5	5.5	6	5.5	6	6
Direct-Drive Motor Type		Electronically Commutated Motor (ECM)										
Direct-Drive Motor HP		1/3	1/2	1/2	1/2	3/4	3/4	1	1	1	1	1
Motor Full Load Amps		4.4	6.3	6.8	6.3	8.8	10.0	11.5	12.0	11.0	11.5	12.0
RPM Range		400 - 1200	600 - 2000	400 - 1200	600 - 2000	400 - 1200	400 - 1200	400 - 1200	400 - 1200	400 - 1300	400 - 1200	400 - 1200
Speed Selections		5	5	5	5	5	5	5	5	5	5	5
Blower Wheel Dia x Width	in.	11 x 7	11 x 7	11 x 8	11 x 7	11 x 8	11 x 8	11 x 10	11 x 10	11 x 10	11 x 11	11 x 11
Air Filtration System		Field Supplied Filter										
Filter Used for Certified Watt Data		325531-40*										
ELECTRICAL DATA												
Input Voltage	Volts-Hertz -Phase	115-60-1										
Operating Voltage Range	Min-Max	104-127										
Maximum Input Amps	Amps	5.1	7.0	7.5	7.1	9.6	10.8	12.3	12.9	12.6	12.4	12.9
Unit Ampacity	Amps	7.3	9.7	10.3	9.8	12.9	14.4	16.3	17.0	16.7	16.4	17.0
Minimum Wire Size	AWG	14	14	14	14	14	14	12	12	12	12	12
Maximum Wire Length@ Minimum Wire Size	Feet	50	38	36	38	28	25	35	33	34	35	33
	(M)	(15.50)	(11.70)	(10.90)	(11.50)	(8.70)	(7.80)	(10.70)	(10.30)	(10.50)	(10.70)	(10.30)
Max Fuse/Ckt Bkr (Time-Delay Type Recommended)	Amps	15	15	15	15	15	15	20	20	20	20	20
Transfomer Capacity (24vac output)		40 VA										
External Control Power Available	Heating	27.9 VA										
	Cooling	34.6 VA										
CONTROLS												
Gas Connection Size		1/2" - NPT										
Burners (Monoport)		2	2	2	3	3	4	4	5	5	6	7
Gas Valve (Redundant) Manufacturer		White Rodgers										
Minimum Inlet Gas pressure (in. wc)		4.50										
Maximum Inlet Gas pressure (in. wc)		13.60										
Manufactured (Mobile) Home Kit		See Accessory Listing										
Ignition Device		Silicon Nitride										
Heating Blower Control (Heating Off-Delay)		Adjustable: 90, 120, 150, 180 seconds										
Cooling Blower Control (Time Delay Relay)		90 seconds										
Communication System		none										
Thermostat Connections		Com 24V, R, W, G, Y										
Accessory Connections		EAC (115vac); HUM (24vac); 1-stg AC (via Y)										

Manufacturer reserves the right to change, at any time, specifications and designs without notice and without obligations.

Maximum Allowable Exposed Vent Length in Unconditioned Space - Ft. / M

Unit Size		26,000* BTUh					
Winter Design Temp °F	Pipe Dia. In.	0” Insulation		3/8” Insulation		1/2” Insulation	
		1½	2	1½	2	1½	2
	20	20	20	50	45	60	50
	0	5	5	25	20	30	25
	-20			15	10	20	15
	-40			10	5	15	10

Winter Design Temp °F	Unit Size	40,000* BTUh									60,000 BTUh											
		Uninsulated			3/8-in. Insulation			1/2-in. Insulation			Uninsulated				3/8-in. Insulation				1/2-in. Insulation			
	Pipe Dia. in.	1 ½	2	2 ½	1 ½	2	2 ½	1 ½	2	2 ½	1 ½	2	2 ½	3	1 ½	2	2 ½	3	1 ½	2	2 ½	3
	20	20	20	20	20	50	45	20	60	50	20	30	30	25	20	75	65	60	20	85	75	65
	0	10	5	5	20	25	20	20	30	25	15	15	10	10	20	40	30	25	20	45	40	30
	-20	5			20	15	10	20	20	15	10	5			20	25	20	15	20	30	25	20

Unit Size		80,000 BTUh														
Winter Design Temp °F	Pipe Dia. in.	Uninsulated					3/8-in. Insulation					1/2-in. Insulation				
		1 ½	2	2 ½	3	4	1 ½	2	2 ½	3	4	1 ½	2	2 ½	3	4
	20	15	40	40	35	30	15	50	90	75	65	15	50	70	70	70
	0	15	20	15	10	5	15	50	45	35	30	15	50	50	40	35
	-20	15	10	5			15	35	30	20	15	15	40	30	25	15
	-40	10	5				15	25	20	15	5	15	30	25	20	10

Winter Design Temp °F	Unit Size	100,000 BTUh											
		Uninsulated				3/8-in. Insulation				1/2-in. Insulation			
	Pipe Dia. in.	2	2 ½	3	4	2	2 ½	3	4	2	2 ½	3	4
	20	20	50	40	35	20	80	95	80	20	80	105	90
	0	20	20	15	10	20	55	45	35	20	65	55	45
	-20	15	10	5		20	35	30	20	20	45	35	25
	-40	10	5			20	25	20	10	20	30	25	15

Winter Design Temp °F	Unit Size	120,000 BTUh									140,000 BTUh								
		Uninsulated			3/8-in. Insulation			1/2-in. Insulation			Uninsulated			3/8-in. Insulation			1/2-in. Insulation		
	Pipe Dia. in.	2 ½	3	4	2 ½	3	4	2 ½	3	4	2 ½	3	4	2 ½	3	4	2 ½	3	4
	20	10	50	40	10	75	95	10	75	105	5	55	50	5	65	105	5	65	125
	0	10	20	15	10	55	45	10	65	50	5	25	15	5	65	50	5	65	60
	-20	10	10		10	35	25	10	45	30	5	10	5	5	45	30	5	50	40
	-40	10	5		10	25	15	10	30	20	5	5		5	30	20	5	35	25

Maximum Allowable Exposed Vent Length in Unconditioned Space (Metric)

Unit Size		26,000* BTUh					
Winter Design Temp °C	Pipe Dia. mm	0” Insulation		3/8” Insulation		1/2” Insulation	
		38	51	38	51	38	51
	-7	6.1	6.1	15.2	13.7	18.3	15.2
	-18	1.5	1.5	7.6	6.1	9.1	7.6
	-29			4.6	3.0	6.1	4.6
	-40			3.0	1.5	4.6	3.0

Winter Design Temp °C	Unit Size	40,000* BTUh									60,000 BTUh											
		Uninsulated			3/8-in. Insulation			1/2-in. Insulation			Uninsulated				3/8-in. Insulation				1/2-in. Insulation			
	Pipe Dia. mm	38	51	64	38	51	64	38	51	64	38	51	64	76	38	51	64	76	38	51	64	76
	-7	6.1	6.1	6.1	6.1	15.2	13.7	6.1	18.3	15.2	6.1	9.1	9.1	7.6	6.1	22.9	19.8	18.3	6.1	25.9	22.9	19.8
	-18	3.0	1.5	1.5	6.1	7.6	6.1	6.1	9.1	7.6	4.6	4.6	3.0	3.0	6.1	12.2	9.1	7.6	6.1	13.7	12.2	9.1
	-29	1.5			6.1	4.6	3.0	6.1	6.1	4.6	3.0	1.5			6.1	7.6	6.1	4.6	6.1	9.1	7.6	6.1
	-40				4.6	3.0	1.5	4.6	4.6	3.0	1.5				6.1	4.6	4.6	3.0	6.1	6.1	4.6	3.0

Manufacturer reserves the right to change, at any time, specifications and designs without notice and without obligations.

Winter Design Temp °C	Unit Size	80,000 BTUh														
		Uninsulated					3/8-in. Insulation					1/2-in. Insulation				
	Pipe Dia. mm	38	51	64	76	102	38	51	64	76	102	38	51	64	76	102
	-7	4.6	12.2	12.2	10.7	9.1	4.6	15.2	27.4	22.9	19.8	4.6	15.2	21.3	21.3	21.3
	-18	4.6	6.1	4.6	3.0	1.5	4.6	15.2	13.7	10.7	9.1	4.6	15.2	15.2	12.2	10.7
	-29	4.6	3.0	1.5			4.6	10.7	9.1	6.1	4.6	4.6	12.2	9.1	7.6	4.6
	-40	3.0	1.5				4.6	7.6	6.1	4.6	1.5	4.6	9.1	7.6	6.1	3.0

Winter Design Temp °C	Unit Size	100,000 BTUh											
		Uninsulated				3/8-in. Insulation				1/2-in. Insulation			
	Pipe Dia. mm	51	64	76	102	51	64	76	102	51	64	76	102
	-7	6.1	15.2	12.2	10.7	6.1	24.4	28.9	24.4	6.1	24.4	32.0	27.4
	-18	6.1	6.1	4.6	3.0	6.1	16.8	13.7	10.7	6.1	19.8	16.7	13.7
	-29	4.6	3.0	1.5		6.1	10.7	9.1	6.1	6.1	13.7	10.7	7.6
	-40	3.0	1.5			6.1	7.6	6.1	3.0	6.1	9.1	7.6	4.6

Winter Design Temp °C	Unit Size	120,000 BTUh									140,000 BTUh								
		Uninsulated			3/8-in. Insulation			1/2-in. Insulation			Uninsulated			3/8-in. Insulation			1/2-in. Insulation		
	Pipe Dia. mm	64	76	102	64	76	102	64	76	102	64	76	102	64	76	102	64	76	102
	-7	3.0	15.2	12.2	3.0	22.9	28.9	3.0	22.9	32.0	1.5	16.7	15.2	1.5	19.8	32.0	1.5	19.8	38.1
	-18	3.0	6.1	4.6	3.0	16.8	13.7	3.0	19.8	15.2	1.5	7.6	4.6	1.5	19.8	15.2	1.5	19.8	18.3
	-29	3.0	3.0		3.0	10.7	7.6	3.0	13.7	9.1	1.5	3.0	1.5	1.5	13.7	9.1	1.5	15.2	12.2
	-40	3.0	1.5		3.0	7.6	4.6	3.0	9.1	6.1	1.5	1.5		1.5	9.1	6.1	1.5	35	7.6

Maximum Equivalent Vent Length - Ft.

NOTE: Maximum Equivalent Vent Length (MEVL) includes standard and concentric vent termination and does NOT include elbows. Use Table 1 - Deductions from Maximum Equivalent Vent Length to determine allowable vent length for each application.

Unit Size		26,000 [2]		40,000 [1]			60,000 [2]				80,000					100,000				120,000 [3]			140,000 [3]		
	Pipe Dia. (in)	1 ½	2	1 ½	2	2 ½	1 ½	2	2 ½	3	1 ½	2	2 ½	3	4	2	2 ½	3	4	2 ½	3	4	2 ½	3	4
Altitude (feet)	0-2000	70	200	40	155	185	20	100	175	200	15	55	130	175	200	20	80	175	200	10	75	185	5	65	155
	2001-3000	65	190	35	150	175		95	165	185	10	49	125	165	185	15	75	165	185		70	175	N/A	60	140
	3001-4000	60	175	30	135	160	16	90	155	175			115	155	175			155	175	5	65	165			120
	4001-4500	55	160	25	130	155	15	85	150	170		44	110	150	165	10	70		170	N/A	60	160		50	110
	4501-5000				125	145		80	145	165				145	160		65	150	165					45	100
	5001-6000	50	145	20	120	130		75	140	155		41	100	135	150			140	155			155		35	80
	6001-7000	45	135	15	110	120	13	70	130	145	N/A	38	90	125	140		60	135	145		50	140		30	65
	7001-8000	40	120	10	100	110	10	65	120	135		36		120	125	N/A	55	125	135		46	130		25	45
	8001-9000	35	110		90	95	5	60	115	125		33	80	110	115		50	115	125		43	120		15	30
	9001-10000	30	95	5	80	85	N/A	55	105	115		30	75	100	105		45	100	115		39	115		10	15

Maximum Equivalent Vent Length - Meters

Unit Size		26,000 [2]		40,000 [1]			60,000 [2]				80,000					100,000				120,000 [3]			140,000 [3]		
	Pipe Dia. (mm)	38	51	38	51	64	38	51	64	76	38	51	64	76	102	51	64	76	102	64	76	102	64	76	102
Altitude (meters)	0-610	21.3	60.9	12.1	47.2	56.3	6.0	30.4	53.3	60.9	4.5	16.7	39.6	53.3	60.9	6.0	24.3	53.3	60.9	3.0	22.8	56.3	1.5	19.8	47.2
	611-914	19.8	57.9	10.6	45.7	53.3		28.9	50.2	56.3	3.0	14.9	38.1	50.2	56.3	4.5	22.8	50.2	56.3		21.3	53.3	NA	18.2	42.6
	915-1219	18.2	53.3	9.1	41.1	48.7	4.8	27.4	47.2	53.3			35.0	47.2	53.3			47.2	53.3	1.5	19.8	50.2			36.5
	1220-1370	16.7	48.7	7.6	39.6	47.2	4.5	25.9	45.7	51.8		13.4	33.5	45.7	50.2	3.0	21.3		51.8	NA	18.2	48.7		15.2	33.5
	1371-1524				38.1	44.1		24.3	44.1	50.2				44.1	48.7		19.8	45.7	50.2					13.7	30.4
	1525-1829	15.2	44.1	6.0	36.5	39.6		22.8	42.6	47.2		12.4	30.4	41.1	45.7			42.6	47.2			47.2		10.6	24.3
	1830-2134	13.7	41.1	4.5	33.5	36.5	3.9	21.3	39.6	44.1	NA	11.5	27.4	38.1	42.6		18.2	41.1	44.1		15.2	42.6		9.1	19.8
	2135-2438	12.1	36.5	3.0	30.4	33.5	3.0	19.8	36.5	41.1		10.9		36.5	38.1	NA	16.7	38.1	41.1		14.0	39.6		7.6	13.7
	2439-2743	10.6	33.5		27.4	28.9	1.5	18.2	35.0	38.1		10.0	24.3	33.5	35.0		15.2	35.0	38.1		13.1	36.5		4.5	9.1
	2744-3048	9.1	28.9	1.5	24.3	25.9	NA	16.7	32.0	35.0		9.1	22.8	30.4	32.0		13.7	30.4	35.0		11.8	35.0		3.0	4.5

NOTES:

1. 40K Inducer Outlet Restrictor disk (P/N 1185623; 1.25-in. (32 mm) Dia.) shipped in the loose parts bag or available through FAST Parts is required for all orientations for installations from 0–2000 ft. (0–610 M) above sea level and where TEVL is no greater than 10 ft. (3 M). Failure to use an outlet restrictor may result in flame disturbances or flame sense lockout.
2. 26K and 60K Inducer Outlet Restrictor disk (P/N 1185623; 1.25-in. (32 mm) Dia.) available through FAST Parts is required in downflow orientations for installations from 0–2000 ft. (0–610 M) above sea level and where TEVL is no greater than 5 ft. (1.5 M).
3. 120K and 140K Inducer Outlet Restrictor disk (P/N 1188589; 1.50-in. (38 mm) Dia.) available through FAST Parts is required in downflow orientations for installations from 0–2000 ft. (0–610 M) above sea level and where TEVL is no greater than 5 ft. (1.5 M).

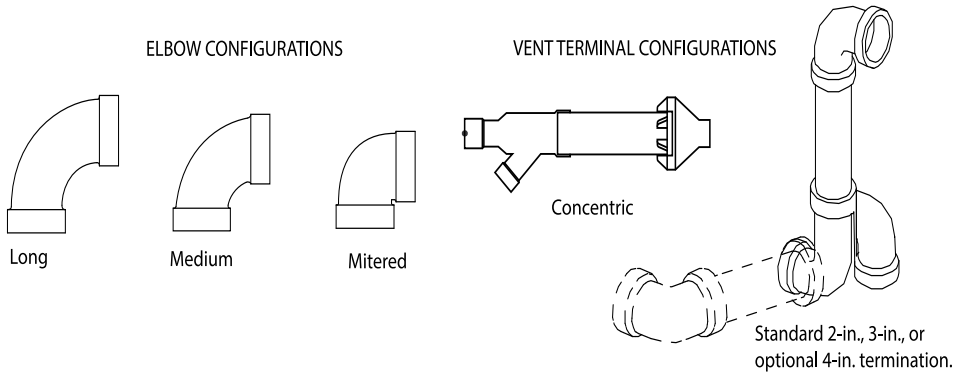

A13110

Table 1 – Deductions from Maximum Equivalent Vent Length - Ft. (M)

Pipe Diameter (in):	1-1/2		2		2-1/2		3		4	
Mitered 90º Elbow	8	(2.4)	8	(2.4)	8	(2.4)	8	(2.4)	8	(2.4)
Medium Radius 90º Elbow	5	(1.5)	5	(1.5)	5	(1.5)	5	(1.5)	5	(1.5)
Long Radius 90º Elbow	3	(0.9)	3	(0.9)	3	(0.9)	3	(0.9)	3	(0.9)
Mitered 45º Elbow	4	(1.2)	4	(1.2)	4	(1.2)	4	(1.2)	4	(1.2)
Medium Radius 45º Elbow	2.5	(0.8)	2.5	(0.8)	2.5	(0.8)	2.5	(0.8)	2.5	(0.8)
Long Radius 45º Elbow	1.5	(0.5)	1.5	(0.5)	1.5	(0.5)	1.5	(0.5)	1.5	(0.5)
Tee	16	(4.9)	16	(4.9)	16	(4.9)	16	(4.9)	16	(4.9)
Concentric Vent Termination	NA		0	(0.0)	NA		0	(0.0)	NA	
Standard Vent Termination	0	(0.0)	0	(0.0)	0	(0.0)	0	(0.0)	0	(0.0)

NOTES:

1. Use only the smallest diameter pipe possible for venting. Over-sizing may cause flame disturbance or excessive vent terminal icing or freeze-up.
2. NA - Not allowed. Pressure switch will not close, or flame disturbance may result.
3. Vent sizing for Canadian installations over 4500 ft. (1370 M) above sea level are subject to acceptance by the local authorities having jurisdiction.
4. Size both the combustion air and vent pipe independently, then use the larger size for both pipes.
5. Assume the two 45° elbows equal one 90° elbow. Wide radius elbows are desirable and may be required in some cases.
6. Elbow and pipe sections within the furnace casing and at the vent termination should not be included in vent length or elbow count.
7. The minimum pipe length is 5 ft. (2 M) linear feet (meters) for all applications.
8. Use 3-in. (76 mm) diameter vent termination kit for installations requiring 4-in. (102 mm) diameter pipe.

Table 2 – AIR DELIVERY - CFM (with filter)

UNIT SIZE	WIRE LEAD COLOR	SPEED TAPS 2, 3 (Function)	EXTERNAL STATIC PRESSURE (IN.W.C.)									
			0.1	0.2	0.3	0.4	0.5	0.6	0.7	0.8	0.9	1.0
0261410	Black	Cooling. Do not use for heating	1045	1010	975	935	895	855	810	760	715	670
	Yellow	Alt Cooling or alt Heating	820	770	730	680	630	585	530	480	435	385
	Orange	Alt Cooling or alt Heating	655	600	550	495	435	385	335	265	-	-
	Blue [7]	Heating or alt Cooling	605	545	490	435	375	335	255	-	-	-
	Red [7]	Alt Cooling. Do not use for heating	480	415	360	305	235	-	-	-	-	-
0401410	Gray	Cooling. Do not use for heating	1050	1025	1000	975	950	920	895	870	845	820
	Yellow	Alt Cooling. Do not use for heating	920	890	860	830	805	775	745	715	690	660
	Orange	Alt Cooling or alt Heating	735	700	665	630	595	555	525	490	450	415
	Blue	Heating or alt Cooling	695	660	625	590	555	515	480	445	405	370
	Red [7]	Alt Cooling. Do not use for heating	540	495	455	410	365	320	280	235	-	-
0401712	Gray	Cooling. Do not use for heating	1180	1140	1100	1055	1010	960	915	860	805	735
	Yellow	Alt Cooling. Do not use for heating	880	845	810	780	745	710	675	640	600	570
	Blue	Heating or alt Cooling	650	610	560	515	470	435	395	360	325	265
	Orange [7]	Alt Cooling. Do not use for heating	525	460	405	350	320	275	210	-	-	-
	Red [7]	Alt Cooling. Do not use for heating	515	420	350	310	270	205	-	-	-	-
0601412	Gray	Cooling. Do not use for heating	1225	1200	1175	1145	1120	1095	1065	1040	1015	990
	Yellow	Alt Cooling. Do not use for heating	1105	1080	1050	1020	990	965	935	905	880	850
	Blue	Heating or alt Cooling	940	910	875	845	810	775	745	710	680	645
	Orange	Alt Cooling or alt Heating	725	690	650	610	570	530	490	445	405	365
	Red [7]	Alt Cooling. Do not use for heating	545	495	445	395	345	295	245	-	-	-

Manufacturer reserves the right to change, at any time, specifications and designs without notice and without obligations.

Table 2 – AIR DELIVERY - CFM (with filter) (Continued)

UNIT SIZE	WIRE LEAD COLOR	SPEED TAPS 2, 3 (Function)	EXTERNAL STATIC PRESSURE (IN.W.C.)									
			0.1	0.2	0.3	0.4	0.5	0.6	0.7	0.8	0.9	1.0
0601714	Gray	Cooling. Do not use for heating	1475	1445	1405	1370	1330	1290	1255	1215	1175	1140
	Yellow	Alt Cooling or alt Heating	1230	1190	1155	1120	1085	1050	1005	970	925	885
	Orange	Alt Cooling or alt Heating	1070	1030	990	950	920	875	840	800	755	715
	Blue	Heating or alt Cooling	1020	975	940	900	860	820	775	740	690	650
	Red	Alt Cooling. Do not use for heating	700	590	535	485	460	390	340	300	275	210
0801716	Gray [5, 6]	Cooling. Do not use for heating	1820	1790	1755	1710	1665	1620	1570	1525	1480	1435
	Yellow	Alt Cooling or alt Heating	1455	1420	1380	1345	1310	1275	1240	1205	1170	1135
	Blue	Heating or alt Cooling	1335	1295	1260	1220	1185	1150	1110	1075	1040	1005
	Orange	Alt Cooling or alt Heating	1110	1065	1020	980	935	895	850	810	770	725
	Red [7]	Alt Cooling. Do not use for heating	425	335	240	-	-	-	-	-	-	-
0802120	Gray [5, 6]	Cooling. Do not use for heating	2045	1995	1950	1900	1855	1805	1760	1710	1660	1615
	Yellow	Alt Cooling. Do not use for heating	1665	1625	1575	1530	1480	1435	1385	1340	1285	1240
	Orange	Alt Cooling or alt Heating	1475	1420	1370	1320	1270	1220	1170	1125	1070	1025
	Blue	Heating or alt Cooling	1345	1290	1235	1180	1130	1080	1025	975	935	885
	Red [7]	Alt Cooling. Do not use for heating	1155	1080	1015	960	895	845	790	735	675	620
1002120	Gray [5, 6]	Cooling. Do not use for heating	2280	2240	2200	2165	2125	2085	2020	1910	1795	1665
	Yellow [5, 6]	Alt Cooling. Do not use for heating	1860	1815	1775	1730	1690	1645	1605	1560	1515	1465
	Blue	Heating or alt Cooling	1755	1710	1665	1620	1580	1535	1485	1440	1390	1340
	Orange	Alt Cooling or alt Heating	1530	1480	1425	1380	1325	1275	1215	1160	1110	1060
	Red	Cooling. Do not use for heating	1340	1285	1230	1170	1110	1050	990	930	875	820
1002122	Gray [5, 6]	Cooling. Do not use for heating	2215	2180	2145	2105	2065	2025	1985	1940	1900	1860
	Yellow [5, 6]	Alt Cooling. Do not use for heating	2115	2080	2035	2000	1960	1920	1880	1835	1790	1740
	Orange [5, 6]	Alt Cooling. Do not use for heating	1975	1935	1890	1850	1805	1760	1720	1670	1620	1570
	Blue [5, 6]	Heating or alt Cooling	1810	1765	1715	1670	1620	1570	1515	1460	1405	1355
	Red	Alt Cooling. Do not use for heating	1530	1475	1425	1360	1300	1240	1175	1115	1055	1000
1202422	Gray [5, 6]	Cooling. Do not use for heating	2310	2255	2205	2155	2105	2055	2005	1955	1910	1885
	Blue [5, 6]	Heating or alt Cooling	2065	2020	1970	1915	1860	1805	1740	1690	1635	1580
	Yellow[5, 6]	Alt Cooling or alt Heating	1850	1800	1745	1690	1640	1585	1530	1475	1420	1360
	Orange	Alt Cooling. Do not use for heating	1500	1440	1380	1320	1260	1205	1145	1085	1035	955
	Red	Alt Cooling. Do not use for heating	1070	960	875	805	710	630	560	490	420	355
1402422	Gray[5, 6]	Cooling. Do not use for heating	2505	2465	2425	2370	2310	2250	2180	2090	1955	1810
	Blue[5, 6]	Heating or alt Cooling	2180	2130	2085	2035	1990	1945	1900	1850	1800	1755
	Yellow[5, 6]	Alt Cooling or alt Heating	1910	1855	1810	1760	1705	1655	1605	1555	1505	1460
	Orange	Alt Cooling. Do not use for heating	1560	1505	1445	1380	1325	1265	1210	1155	1100	1040
	Red [7]	Alt Cooling. Do not use for heating	855	760	665	565	470	385	305	-	-	-

NOTE:

1. A filter is required for each return-air inlet. Airflow performance includes a 3/4-in. (19 mm) washable filter media such as contained in a factory-authorized accessory filter rack. See accessory list. To determine airflow performance without this filter, assume an additional 0.1 in. w.c. available external static pressure.
2. ADJUST THE BLOWER SPEED TAPS AS NECESSARY FOR THE PROPER AIR TEMPERATURE RISE FOR EACH INSTALLATION.
3. The "Function" column identifies which speed taps can be used for heating.
4. If the same motor speed tap is needed for heating and cooling, a Jumper Wire accessory kit is available, see Specification Sheet accessories for the current Jumper Wire accessory part number. Reference the "Start-up, Adjustments, and Safety Check" section of installation instructions for further Jumper Wire instructions.
5. Airflows over 1800 CFM require bottom return, two-side return, or bottom and side return. A minimum filter size of 20" x 25" (508 x 635 mm) is required.
6. For upflow applications, air entering from one side into both the side of the furnace and a return air base counts as a side and bottom return.
7. The "-" entry indicates an unstable operating condition.

ACCESSORIES

DESCRIPTION		
Gas Orifice Kit - #42 (Nat Gas)	LH32DB207	See Installation Instructions for model, altitude, and heat value usages.
Gas Orifice Kit - #43 (Nat Gas)	LH32DB202	
Gas Orifice Kit - #44 (Nat Gas)	LH32DB200	
Gas Orifice Kit - #45 (Nat Gas)	LH32DB205	
Gas Orifice Kit - #46 (Nat Gas)	LH32DB208	
Gas Orifice Kit - #47 (Nat Gas)	LH32DB078	
Gas Orifice Kit - #48 (Nat Gas)	LH32DB076	
Gas Orifice Kit - #54 (LP)	LH32DB203	
Gas Orifice Kit - #55 (LP)	LH32DB201	
Gas Orifice Kit - #56 (LP)	LH32DB206	
Gas Orifice Kit - 1.25mm (LP)	LH32DB209	
Gas Orifice Kit - 1.30mm (LP)	LH32DB210	

DESCRIPTION	ACCESSORY	14”	17”	21”	24”
Cartridge Media Filter - 16” (407 mm) (MERV 11)	FILXXCAR0116	X	X	-	-
Cartridge Media Filter - 16” (407 mm) (MERV 8)	FILXXCAR0016	X	X	-	-
Cartridge Media Filter - 20” (508 mm) (MERV 8)	FILXXCAR0020	-	-	X	-
Cartridge Media Filter - 20” (508 mm) (MERV11)	FILXXCAR0120	-	-	X	-
Cartridge Media Filter - 24” (610 mm) (MERV 8)	FILXXCAR0024	-	-	-	X
Cartridge Media Filter - 24” (610 mm) (MERV11)	FILXXCAR0124	-	-	-	X
EZ Flex Cabinet Side or Bottom - 16”	EZXCAB--0016	X	X	-	-
EZ Flex Cabinet Side or Bottom - 20”	EZXCAB--0020	-	-	X	X
EZ Flex Replacement Filters 16” MERV 10	EXPXXFIL0016	X	X	-	-
EZ Flex Replacement Filters 16” MERV 13	EXPXXFIL0316	X	X	-	-
EZ Flex Replacement Filters 20” MERV 10	EXPXXFIL0020	-	-	X	-
EZ Flex Replacement Filters 20” MERV 13	EXPXXFIL0320	-	-	X	-
EZ Flex Replacement Filters 24” MERV 10	EXPXXFIL0024	-	-	-	X
EZ Flex Replacement Filters 24” MERV 13	EXPXXFIL0324	-	-	-	X
EZ-Flex Filter with End Caps - 16” (407 mm) (MERV 10)	EXPXXUNV0016	X	X	-	-
EZ-Flex Filter with End Caps - 16” (407 mm) (MERV 13)	EXPXXUNV0316	X	X	-	-
EZ-Flex Filter with End Caps - 20” (508 mm) (MERV 10)	EXPXXUNV0020	-	-	X	-
EZ-Flex Filter with End Caps - 20” (508 mm) (MERV 13)	EXPXXUNV0320	-	-	X	-
EZ-Flex Filter with End Caps - 24” (610 mm) (MERV 10)	EXPXXUNV0024	-	-	-	X
EZ-Flex Filter with End Caps - 24” (610 mm) (MERV 13)	EXPXXUNV0324	-	-	-	X
Media Filter Cabinet - 20”	FILCABXL0020	-	-	X	-
Media Filter Cabinet - 24”	FILCABXL0024	-	-	-	X
Media Filter Cabinet -16”	FILCABXL0016	X	X	-	-

PART NUMBER	COMPONENT NAME	DESCRIPTION	0261410	0401410	0401712	0601412	0601714
NAHB00101CT	EXTERNAL TRAP KIT	CONDENSATE TRAP	X	X	X	X	X
NAHA00110DA	DRAIN ACCESSORY	1/2” CPVC TO 3/4” PVC (10 PACK)	X	X	X	X	X
NAHA002CV	VENT TERMINATION KIT	2” CONCENTRIC VENT	X	X	X	X	X
NAHA001CV		3” CONCENTRIC VENT				X	X
NAHA00101VC	INTERNAL VENT KIT	THROUGH THE CABINET	X	X	X	X	X
NAHA00301VT	DIRECT VENT TERMINATION KIT	2” BRACKET	X	X	X	X	X
NAHA00401VT		3” BRACKET				X	X
NAHA00101CK	INLET AIR PIPE COUPLING	COUPLING FOR POLYPROPYLENE VENT SYSTEMS	X	X	X	X	X
NAHA00101HV	HORIZONTAL INSTALLATION KIT	TRAP GROMMET (DIRECT VENT APPLICATION ONLY)	X	X	X	X	X
NAHA00101HH	FREEZE PROTECT KIT	CONDENSATE DRAIN LINE - TAPE	X	X	X	X	X
NAHA00201HH	CONDENSATE FREEZE PROTECT KIT	CONDENSATE TRAP WITH HEAT PAD	X	X	X	X	X
NAHA01101SB	FLOOR BASE KIT	COMBUSTIBLE FLOOR	X	X	X	X	X
AGAGC9NPS01B*	GAS CONVERSION KIT	NATURAL TO PROPANE	-	X	X	X	X
AGAGC9PNS01B*		PROPANE TO NATURAL	-	X	X	X	X
AGAGCANPL01A*	GAS CONVERSION KIT (LOW CAPACITY)	NATURAL TO PROPANE	X	-	-	-	-
AGAGCAPNL01A*		PROPANE TO NATURAL	X	-	-	-	-
1188594†	GAS VALVE TOWER PORT ADAPTER KIT	ADAPTER FOR GAS VALVE	X	X	X	X	X
NAHC00101MH*	MANUFACTURED HOME KIT	GAS CONVERSION KIT	-	X	X	X	X
AGABLRJMP10A	BLOWER TAP KIT	BLOWER SPEED TAP JUMPER KIT (10 PIECE)	X	X	X	X	X

Manufacturer reserves the right to change, at any time, specifications and designs without notice and without obligations.

AGATWNDTE01A	TWINNING KIT - FCT ECM	OPERATION OF TWO IDENTICAL SIZE MODEL FURNACES	-	-	-	-	X
325531-402†	WASHABLE FILTER	3/4” X 16” X 25” WASHABLE FILTER	X	X	X	X	X
FHG1425-2†	EXTERNAL BOTTOM FILTER RACK	14-1/2” X 25” W/O FILTER	X	X	-	X	-
FHG1625-2†		16” X 25” W/O FILTER	-	-	X	-	X
NAHB00101CA	COIL ADAPTER KIT	WITH NO OFFSET	X	X	X	X	X
NAHB00201CA		WITH SINGLE OFFSET	X	X	X	X	X
NAHB00301CA		WITH DOUBLE OFFSET	X	X	X	X	X
NAHA01401RA	RETURN AIR KIT	14-3/16” WIDE	X	X	-	X	-
NAHA01701RA		17-1/2” WIDE	-	-	X	-	X
NAHA001NK	CONDENSATE NEUTRALIZER KIT	NEUTRALIZES CONDENSATE	X	X	X	X	X

*. Factory authorized and field installed. Gas conversion kits are CSA approved.
†. Purchased through FAST Parts
X - Accessory available

PART NUMBER	COMPONENT NAME	DESCRIPTION	0801716	0802120	1002120	1002122	1202422	1402422
NAHB00101CT	EXTERNAL TRAP KIT	CONDENSATE TRAP	X	X	X	X	X	X
NAHA00110DA	DRAIN ACCESSORY	1/2” CPVC TO 3/4” PVC (10 PACK)	X	X	X	X	X	X
NAHA002CV	VENT TERMINATION KIT	2” CONCENTRIC VENT	X	X	X	X	-	-
NAHA001CV		3” CONCENTRIC VENT	X	X	X	X	X	X
NAHA00101VC	INTERNAL VENT KIT	THROUGH THE CABINET	X	X	X	X	X	X
NAHA00301VT	DIRECT VENT TERMINATION KIT	2” BRACKET	X	X	X	X		
NAHA00401VT		3” BRACKET	X	X	X	X	X	X
NAHA00101CK	INLET AIR PIPE COUPLING	COUPLING FOR POLYPROPYLENE VENT SYSTEMS	X	X	X	X	X	X
NAHA00101HV	HORIZONTAL INSTALLATION KIT	TRAP GROMMET (DIRECT VENT APPLICATION ONLY)	X	X	X	X	X	X
NAHA00101HH	FREEZE PROTECT KIT	CONDENSATE DRAIN LINE - TAPE	X	X	X	X	X	X
NAHA00201HH	CONDENSATE FREEZE PROTECT KIT	CONDENSATE TRAP WITH HEAT PAD	X	X	X	X	X	X
NAHA01101SB	FLOOR BASE KIT	COMBUSTIBLE FLOOR	X	X	X	X	X	X
AGAGC9NPS01B*	GAS CONVERSION KIT	NATURAL TO PROPANE	X	X	X	X	X	X
AGAGC9PNS01B*		PROPANE TO NATURAL	X	X	X	X	X	X
1188594†	GAS VALVE TOWER PORT ADAPTER KIT	ADAPTER FOR GAS VALVE	X	X	X	X	X	X
NAHC00101MH*	MANUFACTURED HOME KIT	GAS CONVERSION KIT	X	X	X	X	X	-
AGABLRJMP10A	BLOWER TAP KIT	BLOWER SPEED TAP JUMPER KIT (10 PIECE)	X	X	X	X	X	X
AGATWNDTE01A	TWINNING KIT	OPERATION OF TWO IDENTICAL SIZE MODEL FURNACES	X	X	X	-	X	X
325531-402†	WASHABLE FILTER	3/4” X 16” X 25” WASHABLE FILTER	X	-	-	-	-	-
325531-403†		3/4” X 20” X 25” WASHABLE FILTER	-	X	X	X	-	-
325531-404†		3/4” X 24” X 24” WASHABLE FILTER	-	-	-	-	X	X
FHG1625-2†	EXTERNAL BOTTOM FILTER RACK	16” X 25” W/O FILTER	X	-	-	-	-	-
FHG2025-2†		20” X 25” W/O FILTER	-	X	X	X		
FHG2424-2†		24-1/2” X 24” W/O FILTER	-	-	-	-	X	X
NAHB00101CA	COIL ADAPTER KIT	WITH NO OFFSET	X	X	X	X	X	X
NAHB00201CA		WITH SINGLE OFFSET	X	X	X	X	X	X
NAHB00301CA		WITH DOUBLE OFFSET	X	X	X	X	X	X
NAHA01701RA	RETURN AIR KIT	17-1/2” WIDE	X	-	-	-	-	-
NAHA02101RA		21” WIDE	-	X	X	X	-	-
NAHA02401RA		24-1/2” WIDE	-	-	-	-	X	X
NAHA001NK	CONDENSATE NEUTRALIZER KIT	NEUTRALIZES CONDENSATE	X	X	X	X	X	X

*. Factory authorized and field installed. Gas conversion kits are CSA approved.
†. Purchased through FAST Parts
X - Accessory available

Manufacturer reserves the right to change, at any time, specifications and designs without notice and without obligations.

ORIFICES

Part Number	Gas Type	Orifice Size
1185612	Natural	42
1176928	Natural	43
1185574	Natural	44
1177213	Natural	45

Part Number	Gas Type	Orifice Size
1183809	Natural	46
1185613	Natural	47
1185614	Natural	48

Part Number	Gas Type	Orifice Size
1184256	Propane	54
1185615	Propane	55
1185616	Propane	56
1185617	Propane	1.25 mm
1185618	Propane	1.30 mm

© 2025 Carrier. All rights reserved.

Manufacturer reserves the right to change, at any time, specifications and designs without notice and without obligations.