# N96MSN

## Up to 97% AFUE, Single-Stage, Multi 18-Speed ECM, Condensing Gas Furnace

Arcoaire® Air Conditioning & Heating

# Product Data

A200105

Representative drawing only. Some product models may vary.

**WARNING**

**CARBON MONOXIDE POISONING AND FIRE HAZARD**

Failure to follow this warning could result in personal injury, death, and/or property damage.

This furnace is not designed for use in recreation vehicles or outdoors. This furnace is designed for use in manufactured (Mobile) homes when an optional Mobile Home accessory kit is installed.

Failure to follow this warning could result in personal injury, death, and/or property damage.

Use of the AHRI Certified TM Mark indicates a manufacturer's participation in the program. For verification of certification for individual products, go to www.ahridirectory.org .

ISO 9001 Quality

A200326

## TOUGHER

- Flame roll-out sensors standard
- Adjustable heating blower OFF delay
- Factory set blower ON delay
- Stainless steel secondary heat exchanger
- High temperature limit control designed to prevent overheating
- Direct ignition with Silicon Nitride igniter
- High quality, corrosion-resistant, prepainted steel cabinet

## EASIER TO SELL

- Up to 97% AFUE in upflow, horizontal, and up to 95% AFUE in downflow positions
- Multi 18-speed, constant torque (MCT) ECM blower motor
- Enhanced diagnostics with easy to read 3-digit display for faults and status.
- Supports single-stage cooling units
- Insulated heat exchanger compartment
- Cabinet air leakage less than 2.0% at 1.0 in. w.c. and cabinet air leakage less than 1.4% at 0.5 in. w.c. when tested in accordance with ASHRAE standard 193
- Approved for Twinning applications with manufacturer's approved accessory kit.
- Approved for Manufactured Housing/Mobile Home applications with accessory (order separately)
- All sizes can be installed in air quality management districts with a 40 ng/J NOx emissions requirement

## EASIER TO INSTALL AND SERVICE

- On-board NFC antenna makes setup a tap away when using the service technician app.
- Direct vent (2-pipe), single-pipe venting or ventilated combustion air
- 24 VAC humidifier terminal and electronic air cleaner terminal
- 35" (889mm) high, for ease of installation
- Quarter turn knobs for easy door removal and secure attachment
- Convertible to propane with gas conversion accessory kit
- Four position - upflow/downflow/horizontal (left/right) installation
- Twelve different venting configurations
- Through the casing flue pipe for counterflow or horizontal applications with accessory (order separately)
- Concentric vent available
- Slide out heat exchanger and blower assembly

## LIMITED WARRANTY *

- 5-year No Hassle Replacement™ limited warranty
- Default 5-year parts limited warranty
- Default 20-year heat exchanger limited warranty
- 10-year parts and lifetime limited heat exchanger warranty with timely registration*

  * Equipment must be registered within 90 days of original installation, except in jurisdictions where warranty benefits cannot be conditioned on registration.

  * Applies to original purchaser/homeowner and not available to subsequent oweners.See warranty certificate for complete details and restrictions, including warranty coverage of other applications.

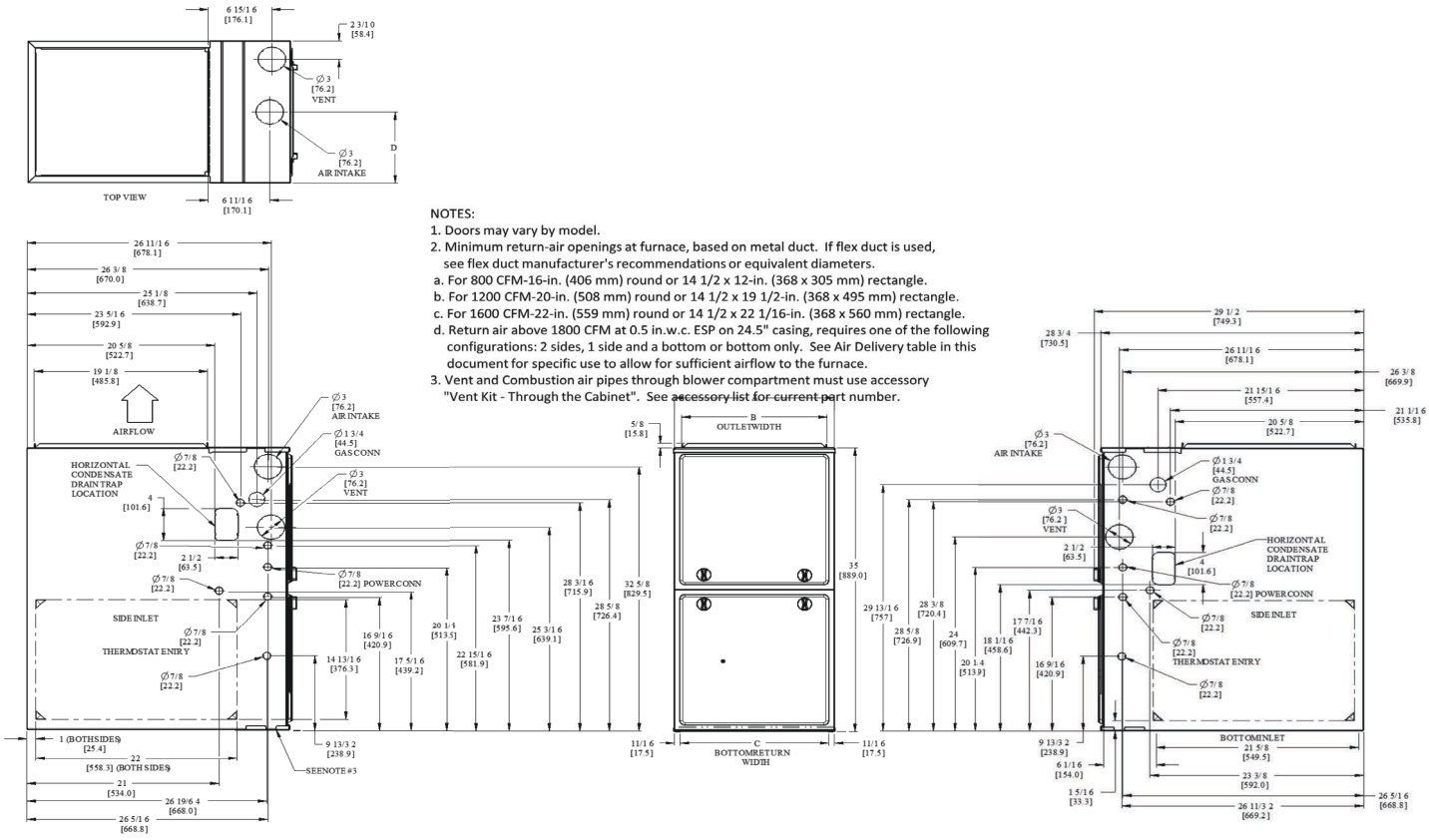


NOTES:
1. Doors may vary by model.
2. Minimum return-air openings at furnace, based on metal duct. If flex duct is used, see flex duct manufacturer's recommendations or equivalent diameters.
a. For 800 CFM-16-in. (406 mm) round or 14 1/2 x 12-in. (368 x 305 mm) rectangle.
b. For 1200 CFM-20-in. (508 mm) round or 14 1/2 x 19 1/2-in. (368 x 495 mm) rectangle.
c. For 1600 CFM-22-in. (559 mm) round or 14 1/2 x 22 1/16-in. (368 x 560 mm) rectangle.
d. Return air above 1800 CFM at 0.5 in.w.c. ESP on 24.5" casing, requires one of the following configurations: 2 sides, 1 side and a bottom or bottom only. See Air Delivery table in this document for specific use to allow for sufficient airflow to the furnace.
3. Vent and Combustion air pipes through blower compartment must use accessory "Vent Kit - Through the Cabinet". See accessory list for current part number.

NOTE: ALL DIMENSIONS IN INCH (MM)

SD5063-4 REV. -

A210796

## Dimensional Drawing

### Dimensions

| FURNACE SIZE | A | B | C | D | SHIP WT. LB (KG) |
|---|---|---|---|---|---|
| | CABINET WIDTH | OUTLET WIDTH | BOTTOM INLET WIDTH | AIR INTAKE | |
| 0261410 | 14-3/16 (361) | 12-1/2 (319) | 12-9/16 (322) | 7-1/8 (181) | 119 (54) |
| 0401410 | 14-3/16 (361) | 12-1/2 (319) | 12-9/16 (322) | 7-1/8 (181) | 123 (56) |
| 0401712 | 17-1/2 (445) | 15-7/8 (403) | 16 (406) | 8-3/4 (222) | 130 (59) |
| 0601412 | 14-3/16 (361) | 12-1/2 (319) | 12-9/16 (322) | 7-1/8 (181) | 129 (59) |
| 0601716 | 17-1/2 (445) | 15-7/8 (403) | 16 (406) | 8-3/4 (222) | 142 (64) |
| 0801716 | 17-1/2 (445) | 15-7/8 (403) | 16 (406) | 8-3/4 (222) | 150 (68) |
| 0802120 | 21 (533) | 19-3/8 (492) | 19-1/2 (495) | 10-1/2 (267) | 158 (72) |
| 1002120 | 21 (533) | 19-3/8 (492) | 19-1/2 (495) | 10-1/2 (267) | 167 (76) |
| 1002122 | 21 (533) | 19-3/8 (492) | 19-1/2 (495) | 10-1/2 (267) | 167 (76) |
| 1202422 | 24-1/2 (622) | 22-7/8 (581) | 23 (584) | 12-1/4 (311) | 181 (82) |
| 1402422 | 24-1/2 (622) | 22-7/8 (581) | 23 (584) | 12-1/4 (311) | 189 (86) |

**Manufacturer reserves the right to change, at any time, specifications and designs without notice and without obligations.**

## MODEL NUMBER NOMENCLATURE

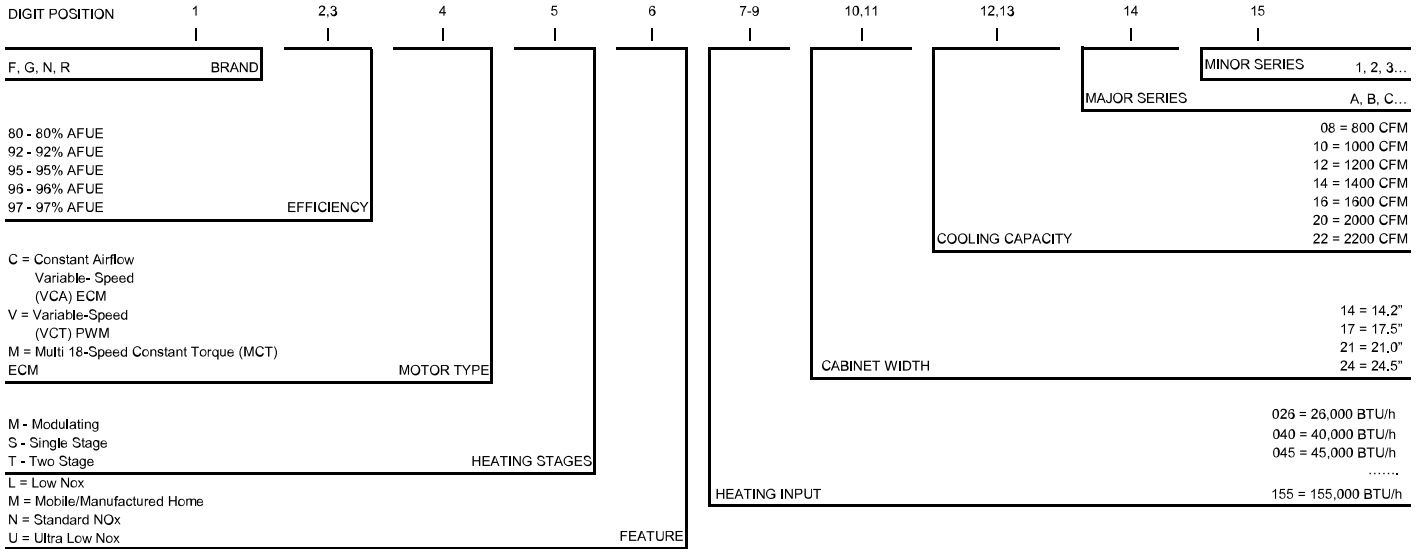


A221575

## FURNACE COMPONENTS

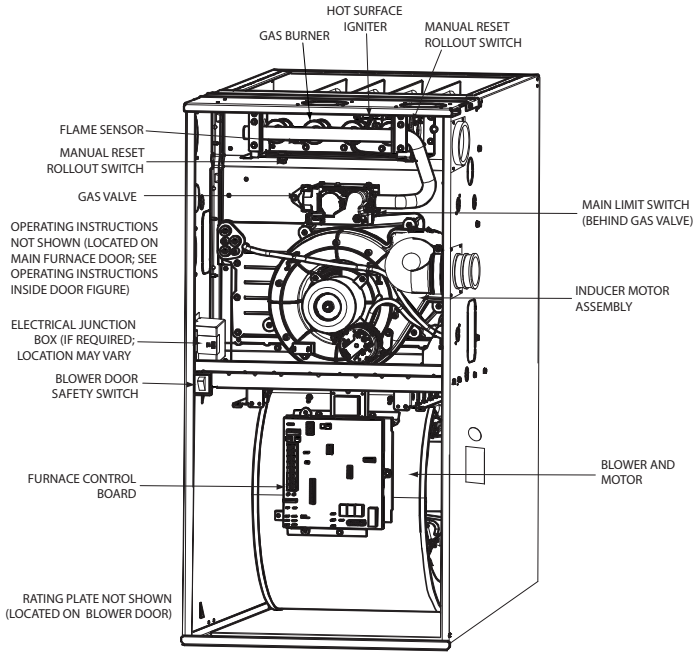


A190145

For California Residents:

If installed with a manufactured (mobile) home conversion kit in SCAQMD: This furnace does not meet the SCAQMD Rule 1111 14 ng/J NOx emission limit, and thus is subject to a mitigation fee of up to $450. This furnace is not eligible for the Clean Air Furnace Rebate Program: www.CleanAirFurnaceRebate.com

## MINIMUM CLEARANCES TO COMBUSTIBLE MATERIALS

| POSITION | CLEARANCE |
|---|---|
| REAR | 0 |
| FRONT (Combustion air openings in furnace and in structure) | 1 in. (25 mm) |
| Required for service | *24 in. (610 mm) |
| All Sides of Supply Plenum | *1 in. (25 mm) |
| Sides | 0 |
| Vent | 0 |
| Top of Furnace | 1 in. (25 mm) |

*. Consult local building codes

The furnace should be sized to provide 100 percent of the design heating load requirement plus any margin that occurs because of furnace model size capacity increments. None of the furnace model sizes can be used if the heating load is 12,000 BTUh or lower. Use Air Conditioning Contractors of America (Manual J and S); American Society of Heating, Refrigerating, and Air-Conditioning Engineers; or other approved engineering method to calculate heating load estimates and select the furnace. Excessive oversizing of the furnace may cause the furnace and/or vent to fail prematurely, customer discomfort and/or vent freezing.

Failure to follow these guidelines is considered faulty installation and/or misapplication of the furnace; and resulting failure, damage, or repairs may impact warranty coverage.

# SPECIFICATIONS

| Unit Size | | 0261410 | 0401410 | 0401712 | 0601412 | 0601716 | 0801716 |
|---|---|---|---|---|---|---|---|
| **HEATING AND CAPACITY AND EFFICIENCY** | | | | | | | |
| **Input BTUh*** | | 26,000 | 40,000 | 40,000 | 60,000 | 60,000 | 80,000 |
| **Output Capacity (BTUh)†)** | | 25,000 | 39,000 | 39,000 | 56,000 | 58,000 | 78,000 |
| **Certified Temperature Rise Range - °F (°C)** | | 25-55 (14-31) | 40-70 (22-39) | 40-70 (22-39) | 35-65 (19-36) | 40-70 (22-39) | 40-70 (22-39) |
| **AFUE** | Upflow/Hz | 96.0% | 96.0% | 96.7% | 95.0% | 97.0% | 97.0% |
| | Downflow | 95.0% | 95.0% | 95.0% | 95.0% | 95.0% | 95.0% |
| **AIRFLOW CAPACITY AND BLOWER DATA** | | | | | | | |
| **Rated Certified External Static Pressure** | Heating | 0.10 | 0.10 | 0.10 | 0.12 | 0.12 | 0.12 |
| | Cooling | 0.50 | 0.50 | 0.50 | 0.50 | 0.50 | 0.50 |
| **Airflow CFM @ Rated ESP (CFM)‡** | Heating | 620 | 705 | 700 | 945 | 1030 | 1290 |
| | Cooling | 175-970 | 155-1000 | 160-1075 | 200-1165 | 315-1580 | 370-1625 |
| **Direct Drive Motor HP** | | 1/3 | 1/2 | 1/2 | 1/2 | 3/4 | 3/4 |
| **Motor Full Load Amps** | | 4.4 | 6.3 | 6.7 | 6.3 | 8.8 | 9.2 |
| **Heating Blower Control (Htg OFF-Delay)** | | Adjustable: 90, 120 (factory-set), 150, 180 seconds | | | | | |
| **Cooling Blower Control (Clg OFF-Delay)** | | Adjustable: 90 (factory-set), 5, 30 seconds | | | | | |
| **Blower Wheel Diameter x Width - In. (mm)** | | 11x7 (279x178) | 11x7 (279x178) | 11x8 (279x203) | 11x7 (279x178) | 11x8 (279x203) | 11x8 (279x203) |
| **Air Filtration System** | | Field Supplied Filter | | | | | |
| **Filter used for Certified Watt Data** | | 325531-40** | | | | | |
| **ELECTRICAL DATA** | | | | | | | |
| **Unit Volts-Hertz-Phase** | | 115-60-1 | | | | | |
| **Operating Voltage Range** | Min-Max | 104-127 | | | | | |
| **Maximum Unit Amps** | | 5.2 | 7.0 | 7.4 | 7.1 | 10.1 | 10.0 |
| **Unit Ampacity** | | 7.5 | 9.7 | 10.2 | 9.8 | 13.6 | 13.4 |
| **Maximum Wire Length (Measure 1 way in Ft/M)** | | 50/15.2 | 38/11.7 | 36/11.1 | 38/11.5 | 27/8.3 | 27/8.4 |
| **Minimum Wire Size** | AWG | 14 | 14 | 14 | 14 | 14 | 14 |
| **Max. Fuse/Ckt Bk Size (Time-Delay Type Recommended)** | Amps | 15 | 15 | 15 | 15 | 15 | 15 |
| **Transformer Capacity (24 VAC output)** | | 40VA | | | | | |
| **External Control Power Available** | Heating | 12VA | | | | | |
| | Cooling | 35VA | | | | | |
| **GAS CONTROLS** | | | | | | | |
| **Burners** | | 2 | 2 | 3 | 3 | 4 | 4 |
| **Gas Connection Size** | | 1/2 in. NPT | | | | | |
| **Gas Valve (Redundant)** | Mfr | White Rodgers™ | | | | | |
| **Min. inlet pressure** | (in.w.c.) | 4.5 (Natural Gas) | | | | | |
| **Max. inlet pressure** | (in.w.c.) | 13.6 (Natural Gas) | | | | | |
| **Ignition Device** | | Silicon Nitride | | | | | |
| **Factory installed orifice** | | Size 44 | | | | | |
| **CONNECTIONS** | | | | | | | |
| **Communication System** | | None | | | | | |
| **Thermostat Connections** | | G,C, W, Y, R | | | | | |
| **Accessory Connections** | | EAC-1 (115 VAC); HUM (24 VAC); 1-STG AC (via Y) | | | | | |

*. Gas input ratings are certified for elevations to 2000 ft. (610 M). In USA, For elevations above 2000 ft (610 M), reduce ratings 4 percent for each 1000 ft (305 M) above sea level. Refer to National Fuel Gas Code NFPA 54/ANSI Z223.1 Table F.4 or furnace installation instructions.

†. Capacity in accordance with U.S. Government DOE test procedures.

‡. Airflow shown is for bottom only return-air supply for the as-shipped speed tap. For air delivery above 1800 CFM, see Air Delivery table for other options. A filter is required for each return-air supply. An airflow reduction of up to 7 percent may occur when using the factory-specified 4-5/16-in. (110 mm) wide, high efficiency media filter.

**. See Accessory List for part numbers available.

| Unit Size | | 0802120 | 1002120 | 1002122 | 1202422 | 1402422 |
|---|---|---|---|---|---|---|
| **HEATING AND CAPACITY AND EFFICIENCY** | | | | | | |
| **Input BTUh*** | | 80,000 | 100,000 | 100,000 | 120,000 | 140,000 |
| **Output Capacity (BTUh)†)** | | 78,000 | 97,000 | 97,000 | 116,000 | 135,000 |
| **Certified Temperature Rise Range - °F (°C)** | | 40-70 (22-39) | 40-70 (22-39) | 40-70 (22-39) | 40-70 (22-39) | 45-75 (25-42) |
| **AFUE** | Upflow/Hz | 97.0% | 96.3% | 96.3% | 96.1% | 95.0% |
| | Downflow | 95.0% | 95.0% | 95.0% | 95.0% | 95.0% |
| **AIRFLOW CAPACITY AND BLOWER DATA** | | | | | | |
| **Rated Certified External Static Pressure** | Heating | 0.12 | 0.15 | 0.15 | 0.20 | 0.20 |
| | Cooling | 0.50 | 0.50 | 0.50 | 0.50 | 0.50 |
| **Airflow CFM @ Rated ESP (CFM)‡** | Heating | 1310 | 1730 | 1710 | 1965 | 2040 |
| | Cooling | 225-2125 | 375-2145 | 450-2240 | 290-2240 | 380-2230 |
| **Direct Drive Motor HP** | | 1 | 1 | 1 | 1 | 1 |
| **Motor Full Load Amps** | | 11.5 | 11.7 | 11.0 | 11.5 | 11.7 |
| **Heating Blower Control (Htg OFF-Delay)** | | Adjustable: 90, 120 (factory-set), 150, 180 seconds | | | | |
| **Cooling Blower Control (Clg OFF-Delay)** | | Adjustable: 90 (factory-set), 5, 30 seconds | | | | |
| **Blower Wheel Diameter x Width - In. (mm)** | | 11x10 (279x254) | 11x10 (279x254) | 11x10 (279x254) | 11x11 (279x279) | 11x11 (279x279) |
| **Air Filtration System** | | Field Supplied Filter | | | | |
| **Filter used for Certified Watt Data** | | 325531-40** | | | | |
| **ELECTRICAL DATA** | | | | | | |
| **Unit Volts-Hertz-Phase** | | 115-60-1 | | | | |
| **Operating Voltage Range** | Min-Max | 104-127 | | | | |
| **Maximum Unit Amps** | | 13.1 | 12.6 | 12.5 | 13.2 | 12.6 |
| **Unit Ampacity** | | 17.3 | 16.7 | 16.5 | 17.4 | 16.7 |
| **Maximum Wire Length (Measure 1 way in Ft/M)** | | 33/10.1 | 34/10.5 | 34/10.6 | 33/10.0 | 34/10.5 |
| **Minimum Wire Size** | AWG | 12 | 12 | 12 | 12 | 12 |
| **Max. Fuse/Ckt Bkr Size (Time-Delay Type Recommended)** | Amps | 20 | 20 | 20 | 20 | 20 |
| **Transformer Capacity (24 VAC output)** | | 40VA | | | | |
| **External Control Power Available** | Heating | 12VA | | | | |
| | Cooling | 35VA | | | | |
| **GAS CONTROLS** | | | | | | |
| **Burners** | | 4 | 5 | 5 | 6 | 7 |
| **Gas Connection Size** | | 1/2 in. NPT | | | | |
| **Gas Valve (Redundant)** | Mfr | White Rodgers™ | | | | |
| **Min. inlet pressure** | (in.w.c.) | 4.5 (Natural Gas) | | | | |
| **Max. inlet pressure** | (in.w.c.) | 13.6 (Natural Gas) | | | | |
| **Ignition Device** | | Silicon Nitride | | | | |
| **Factory installed orifice** | | Size 44 | | | | |
| **CONNECTIONS** | | | | | | |
| **Communication System** | | None | | | | |
| **Thermostat Connections** | | G, C, W, Y, R | | | | |
| **Accessory Connections** | | EAC-1 (115 VAC); HUM (24 VAC); 1-STG AC (via Y) | | | | |

*. Gas input ratings are certified for elevations to 2000 ft. (610 M). In USA, For elevations above 2000 ft (610 M), reduce ratings 4 percent for each 1000 ft (305 M) above sea level. Refer to National Fuel Gas Code NFPA 54/ANSI Z223.1 Table F.4 or furnace installation instructions.

†. Capacity in accordance with U.S. Government DOE test procedures.

‡. Airflow shown is for bottom only return-air supply for the as-shipped speed tap. For air delivery above 1800 CFM, see Air Delivery table for other options. A filter is required for each return-air supply. An airflow reduction of up to 7 percent may occur when using the factory-specified 4-5/16-in. (110 mm) wide, high efficiency media filter.

**. See Accessory List for part numbers available.

# AIR DELIVERY (with filter)

**Air Delivery - CFM (with filter)**

| Unit Size | Airflow Setting | Default Setting | External Static Pressure (in. w.c.) | | | | | | | | | |
|---|---|---|---|---|---|---|---|---|---|---|---|---|
| | | | 0.1 | 0.2 | 0.3 | 0.4 | 0.5 | 0.6 | 0.7 | 0.8 | 0.9 | 1 |
| 0261410 | 1 | Cont. Fan | 470 | 395 | 320 | 250 | 175 | - | - | - | - | - |
| | 2 | | 510 | 445 | 370 | 305 | 240 | 165 | - | - | - | - |
| | 3 | | 535 | 470 | 400 | 335 | 275 | 200 | 130 | - | - | - |
| | 4 | | 560 | 495 | 430 | 365 | 310 | 245 | 170 | - | - | - |
| | 5 | | 595 | 535 | 470 | 405 | 350 | 295 | 225 | 155 | - | - |
| | 6 | Heat | 620 | 560 | 500 | 435 | 375 | 320 | 265 | 195 | 130 | - |
| | 7 | | 665 | 605 | 550 | 490 | 430 | 380 | 330 | 270 | 205 | 140 |
| | 8 | | 705 | 650 | 600 | 540 | 480 | 430 | 380 | 335 | 280 | 215 |
| | 9 | | 745 | 695 | 645 | 590 | 535 | 480 | 435 | 385 | 340 | 285 |
| | 10 | | 785 | 735 | 685 | 635 | 585 | 530 | 480 | 435 | 390 | 350 |
| | 11 | | 820 | 775 | 730 | 680 | 630 | 575 | 525 | 485 | 440 | 400 |
| | 12 | | 855 | 810 | 765 | 720 | 675 | 620 | 570 | 525 | 485 | 445 |
| | 13 | | 890 | 845 | 800 | 755 | 710 | 665 | 615 | 570 | 530 | 490 |
| | 14 | | 945 | 905 | 860 | 820 | 775 | 735 | 690 | 640 | 595 | 560 |
| | 15 | | 980 | 940 | 900 | 860 | 820 | 780 | 735 | 690 | 645 | 605 |
| | 16 | | 1025 | 985 | 950 | 910 | 870 | 830 | 795 | 750 | 710 | 665 |
| | 17 | | 1065 | 1030 | 995 | 955 | 920 | 880 | 845 | 805 | 760 | 720 |
| | 18 | Cooling | 1115 | 1080 | 1045 | 1010 | 970 | 935 | 900 | 865 | 825 | 785 |
| 0401410 | 1 | Cont. Fan | 390 | 335 | 275 | 215 | 155 | - | - | - | - | - |
| | 2 | | 405 | 355 | 300 | 240 | 185 | 125 | - | - | - | - |
| | 3 | | 455 | 405 | 355 | 305 | 250 | 200 | 140 | - | - | - |
| | 4 | | 485 | 440 | 390 | 345 | 295 | 245 | 190 | 140 | - | - |
| | 5 | | 530 | 485 | 440 | 395 | 350 | 300 | 255 | 205 | 155 | - |
| | 6 | | 565 | 525 | 485 | 440 | 400 | 355 | 310 | 270 | 220 | 170 |
| | 7 | | 600 | 560 | 520 | 480 | 440 | 400 | 360 | 320 | 275 | 230 |
| | 8 | | 645 | 605 | 570 | 530 | 495 | 455 | 415 | 375 | 335 | 300 |
| | 9 | Heat | 705 | 665 | 630 | 595 | 560 | 525 | 490 | 455 | 415 | 380 |
| | 10 | | 720 | 685 | 650 | 615 | 580 | 545 | 515 | 480 | 440 | 405 |
| | 11 | | 760 | 730 | 695 | 660 | 630 | 595 | 560 | 530 | 495 | 460 |
| | 12 | | 820 | 785 | 755 | 725 | 690 | 660 | 630 | 600 | 570 | 535 |
| | 13 | | 865 | 835 | 805 | 775 | 745 | 715 | 690 | 660 | 630 | 600 |
| | 14 | | 910 | 885 | 855 | 825 | 800 | 770 | 740 | 710 | 685 | 655 |
| | 15 | | 965 | 935 | 905 | 880 | 855 | 825 | 800 | 770 | 745 | 715 |
| | 16 | | 1005 | 975 | 950 | 925 | 900 | 870 | 845 | 820 | 795 | 765 |
| | 17 | | 1055 | 1025 | 1000 | 975 | 950 | 925 | 900 | 875 | 850 | 825 |
| | 18 | Cooling | 1100 | 1075 | 1050 | 1025 | 1000 | 980 | 955 | 930 | 905 | 880 |
| 0401712 | 1 | Cont. Fan | 415 | 350 | 290 | 230 | 160 | 105 | - | - | - | - |
| | 2 | | 450 | 385 | 325 | 270 | 210 | 150 | - | - | - | - |
| | 3 | | 480 | 420 | 360 | 310 | 260 | 195 | 140 | - | - | - |
| | 4 | | 525 | 470 | 415 | 360 | 315 | 265 | 205 | 150 | - | - |
| | 5 | | 565 | 515 | 460 | 410 | 360 | 315 | 265 | 210 | 160 | - |
| | 6 | | 605 | 555 | 505 | 455 | 405 | 365 | 320 | 270 | 215 | 170 |
| | 7 | | 655 | 605 | 560 | 510 | 465 | 420 | 385 | 340 | 290 | 240 |
| | 8 | Heat | 700 | 655 | 610 | 565 | 520 | 475 | 435 | 400 | 360 | 310 |
| | 9 | | 740 | 695 | 655 | 610 | 570 | 525 | 485 | 450 | 415 | 380 |
| | 10 | | 780 | 740 | 700 | 660 | 615 | 575 | 535 | 500 | 465 | 430 |
| | 11 | | 830 | 790 | 750 | 715 | 675 | 635 | 595 | 560 | 520 | 490 |
| | 12 | | 880 | 840 | 800 | 765 | 730 | 690 | 655 | 615 | 575 | 545 |
| | 13 | | 930 | 895 | 860 | 825 | 790 | 750 | 715 | 680 | 645 | 610 |
| | 14 | | 980 | 945 | 910 | 875 | 845 | 810 | 775 | 740 | 705 | 670 |
| | 15 | | 1030 | 995 | 960 | 930 | 895 | 860 | 830 | 795 | 760 | 730 |
| | 16 | | 1085 | 1050 | 1020 | 985 | 955 | 925 | 890 | 860 | 825 | 795 |
| | 17 | | 1140 | 1105 | 1080 | 1045 | 1015 | 985 | 955 | 925 | 895 | 865 |
| | 18 | Cooling | 1220 | 1185 | 1150 | 1115 | 1075 | 1040 | 1005 | 965 | 925 | 885 |

**Manufacturer reserves the right to change, at any time, specifications and designs without notice and without obligations.**

**Air Delivery - CFM (with filter) (Continued)**

| Unit Size | Airflow Setting | Default Setting | External Static Pressure (in. w.c.) | | | | | | | | | |
|---|---|---|---|---|---|---|---|---|---|---|---|---|
| | | | 0.1 | 0.2 | 0.3 | 0.4 | 0.5 | 0.6 | 0.7 | 0.8 | 0.9 | 1 |
| 0601412 | 1 | Cont. Fan | 440 | 380 | 320 | 260 | 200 | 140 | - | - | - | - |
| | 2 | | 460 | 400 | 345 | 285 | 225 | 165 | - | - | - | - |
| | 3 | | 510 | 460 | 405 | 350 | 295 | 240 | 185 | 130 | - | - |
| | 4 | | 575 | 525 | 475 | 425 | 375 | 325 | 280 | 230 | 175 | - |
| | 5 | | 605 | 560 | 510 | 460 | 415 | 365 | 320 | 270 | 225 | 170 |
| | 6 | | 665 | 615 | 570 | 525 | 480 | 435 | 390 | 350 | 305 | 260 |
| | 7 | | 700 | 660 | 615 | 570 | 525 | 485 | 440 | 400 | 355 | 315 |
| | 8 | | 750 | 710 | 670 | 625 | 585 | 545 | 505 | 460 | 420 | 385 |
| | 9 | | 810 | 770 | 730 | 690 | 650 | 615 | 575 | 535 | 495 | 460 |
| | 10 | | 865 | 825 | 790 | 750 | 715 | 680 | 640 | 605 | 565 | 530 |
| | 11 | | 915 | 880 | 845 | 810 | 775 | 740 | 705 | 670 | 630 | 595 |
| | 12 | Heat | 955 | 920 | 890 | 855 | 820 | 785 | 750 | 715 | 680 | 650 |
| | 13 | | 1015 | 980 | 950 | 915 | 885 | 850 | 820 | 785 | 755 | 720 |
| | 14 | | 1070 | 1040 | 1005 | 975 | 945 | 915 | 885 | 855 | 820 | 790 |
| | 15 | | 1105 | 1075 | 1045 | 1015 | 985 | 955 | 925 | 895 | 865 | 835 |
| | 16 | | 1165 | 1135 | 1105 | 1080 | 1050 | 1020 | 995 | 965 | 935 | 910 |
| | 17 | | 1215 | 1190 | 1160 | 1135 | 1105 | 1080 | 1055 | 1025 | 995 | 970 |
| | 18 | Cooling | 1270 | 1240 | 1215 | 1190 | 1165 | 1135 | 1110 | 1085 | 1060 | 1030 |
| 0601716 | 1 | Cont. Fan | 590 | 520 | 455 | 380 | 315 | 250 | 185 | 120 | - | - |
| | 2 | | 640 | 575 | 515 | 445 | 375 | 320 | 260 | 195 | 130 | - |
| | 3 | | 710 | 650 | 595 | 535 | 470 | 410 | 355 | 305 | 245 | 175 |
| | 4 | | 755 | 700 | 645 | 590 | 535 | 465 | 410 | 360 | 310 | 260 |
| | 5 | | 835 | 780 | 730 | 680 | 630 | 580 | 515 | 465 | 420 | 370 |
| | 6 | | 890 | 840 | 790 | 745 | 695 | 645 | 595 | 540 | 490 | 445 |
| | 7 | | 960 | 915 | 870 | 825 | 780 | 735 | 690 | 635 | 580 | 535 |
| | 8 | | 1010 | 965 | 920 | 875 | 835 | 790 | 745 | 705 | 650 | 605 |
| | 9 | Heat | 1040 | 995 | 950 | 910 | 870 | 825 | 785 | 745 | 700 | 650 |
| | 10 | | 1095 | 1055 | 1015 | 975 | 935 | 895 | 855 | 815 | 775 | 730 |
| | 11 | | 1165 | 1130 | 1090 | 1050 | 1010 | 975 | 940 | 900 | 865 | 830 |
| | 12 | | 1235 | 1200 | 1160 | 1125 | 1090 | 1055 | 1020 | 985 | 945 | 915 |
| | 13 | | 1315 | 1280 | 1245 | 1210 | 1175 | 1140 | 1110 | 1075 | 1045 | 1010 |
| | 14 | | 1380 | 1345 | 1315 | 1280 | 1250 | 1215 | 1185 | 1150 | 1120 | 1090 |
| | 15 | | 1455 | 1420 | 1390 | 1360 | 1330 | 1300 | 1270 | 1240 | 1210 | 1180 |
| | 16 | | 1525 | 1495 | 1465 | 1435 | 1410 | 1380 | 1350 | 1325 | 1295 | 1270 |
| | 17 | | 1605 | 1580 | 1550 | 1525 | 1500 | 1470 | 1445 | 1420 | 1395 | 1370 |
| | 18 | Cooling | 1720 | 1685 | 1650 | 1615 | 1580 | 1545 | 1505 | 1470 | 1430 | 1395 |
| 0801716 | 1 | Cont. Fan | 625 | 560 | 495 | 430 | 370 | 310 | 250 | 190 | 130 | - |
| | 2 | | 695 | 635 | 575 | 515 | 455 | 400 | 345 | 285 | 235 | 175 |
| | 3 | | 760 | 700 | 645 | 590 | 530 | 480 | 430 | 370 | 325 | 270 |
| | 4 | | 815 | 765 | 710 | 660 | 605 | 550 | 500 | 455 | 400 | 355 |
| | 5 | | 875 | 820 | 770 | 725 | 675 | 620 | 570 | 525 | 475 | 430 |
| | 6 | | 945 | 895 | 845 | 800 | 755 | 710 | 655 | 610 | 565 | 525 |
| | 7 | | 1005 | 960 | 915 | 870 | 830 | 785 | 740 | 690 | 645 | 610 |
| | 8 | | 1070 | 1025 | 985 | 940 | 900 | 855 | 815 | 770 | 725 | 685 |
| | 9 | | 1145 | 1100 | 1060 | 1020 | 980 | 940 | 900 | 860 | 820 | 775 |
| | 10 | | 1215 | 1175 | 1135 | 1095 | 1055 | 1020 | 980 | 940 | 905 | 865 |
| | 11 | | 1295 | 1255 | 1215 | 1180 | 1145 | 1105 | 1070 | 1035 | 1000 | 960 |
| | 12 | Heat | 1300 | 1265 | 1225 | 1190 | 1155 | 1120 | 1085 | 1050 | 1010 | 980 |
| | 13 | | 1355 | 1320 | 1280 | 1245 | 1210 | 1175 | 1135 | 1100 | 1070 | 1030 |
| | 14 | | 1440 | 1400 | 1365 | 1335 | 1300 | 1265 | 1230 | 1200 | 1165 | 1130 |
| | 15 | | 1515 | 1480 | 1445 | 1415 | 1380 | 1350 | 1320 | 1285 | 1255 | 1220 |
| | 16 | | 1575 | 1540 | 1510 | 1480 | 1450 | 1415 | 1385 | 1355 | 1320 | 1290 |
| | 17 | | 1655 | 1625 | 1590 | 1560 | 1530 | 1500 | 1470 | 1440 | 1410 | 1375 |
| | 18 | Cooling | 1760 | 1730 | 1700 | 1665 | 1625 | 1585 | 1535 | 1490 | 1450 | 1405 |

**Manufacturer reserves the right to change, at any time, specifications and designs without notice and without obligations.**

**Air Delivery - CFM (with filter) (Continued)**

| Unit Size | Airflow Setting | Default Setting | External Static Pressure (in. w.c.) | | | | | | | | | |
|---|---|---|---|---|---|---|---|---|---|---|---|---|
| | | | 0.1 | 0.2 | 0.3 | 0.4 | 0.5 | 0.6 | 0.7 | 0.8 | 0.9 | 1 |
| 0802120 | 1 | Cont. Fan | 615 | 515 | 415 | 325 | 225 | 140 | - | - | - | - |
| | 2 | | 695 | 610 | 515 | 430 | 340 | 255 | 165 | - | - | - |
| | 3 | | 805 | 725 | 645 | 560 | 485 | 405 | 325 | 245 | 165 | - |
| | 4 | | 870 | 795 | 720 | 640 | 560 | 490 | 415 | 345 | 270 | 195 |
| | 5 | | 955 | 885 | 815 | 740 | 670 | 595 | 530 | 460 | 390 | 330 |
| | 6 | | 1070 | 1005 | 935 | 870 | 805 | 740 | 675 | 615 | 545 | 485 |
| | 7 | | 1150 | 1085 | 1025 | 960 | 900 | 835 | 775 | 710 | 650 | 590 |
| | 8 | | 1245 | 1185 | 1125 | 1065 | 1005 | 950 | 890 | 835 | 775 | 720 |
| | 9 | Heat | 1325 | 1270 | 1215 | 1160 | 1105 | 1050 | 995 | 945 | 885 | 830 |
| | 10 | | 1415 | 1360 | 1310 | 1255 | 1205 | 1150 | 1100 | 1045 | 995 | 945 |
| | 11 | | 1535 | 1485 | 1435 | 1385 | 1335 | 1285 | 1240 | 1195 | 1145 | 1095 |
| | 12 | | 1610 | 1560 | 1515 | 1465 | 1420 | 1375 | 1325 | 1280 | 1235 | 1190 |
| | 13 | | 1715 | 1670 | 1625 | 1580 | 1535 | 1495 | 1450 | 1405 | 1360 | 1315 |
| | 14 | | 1820 | 1775 | 1735 | 1690 | 1650 | 1610 | 1570 | 1530 | 1485 | 1445 |
| | 15 | | 1915 | 1875 | 1835 | 1795 | 1760 | 1720 | 1680 | 1645 | 1605 | 1565 |
| | 16 | | 1995 | 1960 | 1920 | 1885 | 1845 | 1810 | 1775 | 1740 | 1700 | 1665 |
| | 17 | Cooling | 2105 | 2070 | 2035 | 2000 | 1970 | 1935 | 1900 | 1870 | 1835 | 1805 |
| | 18 | | 2305 | 2260 | 2215 | 2170 | 2125 | 2080 | 2030 | 1985 | 1935 | 1890 |
| 1002120 | 1 | Cont. Fan | 720 | 630 | 540 | 450 | 375 | 285 | 205 | 130 | - | - |
| | 2 | | 815 | 735 | 650 | 570 | 490 | 415 | 345 | 265 | 190 | 135 |
| | 3 | | 910 | 835 | 760 | 680 | 605 | 535 | 465 | 400 | 330 | 255 |
| | 4 | | 995 | 925 | 855 | 780 | 710 | 640 | 575 | 510 | 445 | 385 |
| | 5 | | 1105 | 1040 | 975 | 910 | 845 | 780 | 710 | 650 | 585 | 530 |
| | 6 | | 1200 | 1140 | 1080 | 1020 | 955 | 895 | 835 | 770 | 710 | 655 |
| | 7 | | 1290 | 1230 | 1175 | 1120 | 1065 | 1005 | 945 | 885 | 825 | 770 |
| | 8 | | 1375 | 1320 | 1265 | 1215 | 1160 | 1105 | 1050 | 995 | 935 | 880 |
| | 9 | | 1475 | 1425 | 1375 | 1325 | 1275 | 1220 | 1170 | 1115 | 1060 | 1010 |
| | 10 | | 1565 | 1520 | 1470 | 1425 | 1375 | 1330 | 1280 | 1230 | 1175 | 1125 |
| | 11 | | 1675 | 1625 | 1580 | 1535 | 1490 | 1450 | 1400 | 1355 | 1305 | 1255 |
| | 12 | Heat | 1755 | 1710 | 1665 | 1625 | 1580 | 1535 | 1490 | 1450 | 1405 | 1360 |
| | 13 | | 1885 | 1840 | 1795 | 1755 | 1715 | 1670 | 1630 | 1590 | 1550 | 1505 |
| | 14 | | 1970 | 1925 | 1885 | 1845 | 1805 | 1765 | 1725 | 1685 | 1645 | 1610 |
| | 15 | | 2085 | 2045 | 2005 | 1960 | 1925 | 1885 | 1845 | 1810 | 1775 | 1735 |
| | 16 | | 2145 | 2105 | 2070 | 2030 | 1990 | 1955 | 1920 | 1885 | 1845 | 1805 |
| | 17 | | 2185 | 2145 | 2105 | 2070 | 2035 | 1995 | 1960 | 1925 | 1885 | 1850 |
| | 18 | Cooling | 2315 | 2280 | 2240 | 2200 | 2145 | 2090 | 2035 | 1980 | 1925 | 1870 |
| 1002122 | 1 | Cont. Fan | 865 | 765 | 655 | 560 | 450 | 355 | 270 | 185 | - | - |
| | 2 | | 935 | 835 | 735 | 640 | 540 | 440 | 350 | 270 | 190 | - |
| | 3 | | 1025 | 945 | 845 | 755 | 670 | 575 | 475 | 395 | 320 | 245 |
| | 4 | | 1115 | 1035 | 945 | 855 | 775 | 695 | 600 | 510 | 430 | 360 |
| | 5 | | 1220 | 1150 | 1075 | 985 | 905 | 830 | 755 | 665 | 580 | 495 |
| | 6 | | 1295 | 1230 | 1160 | 1075 | 995 | 920 | 850 | 775 | 690 | 610 |
| | 7 | | 1365 | 1305 | 1235 | 1160 | 1080 | 1010 | 940 | 870 | 795 | 710 |
| | 8 | | 1495 | 1435 | 1380 | 1315 | 1245 | 1170 | 1105 | 1040 | 975 | 910 |
| | 9 | | 1580 | 1525 | 1465 | 1410 | 1345 | 1275 | 1200 | 1140 | 1080 | 1020 |
| | 10 | | 1680 | 1625 | 1575 | 1520 | 1460 | 1395 | 1325 | 1260 | 1205 | 1145 |
| | 11 | Heat | 1735 | 1685 | 1630 | 1580 | 1525 | 1465 | 1400 | 1335 | 1275 | 1220 |
| | 12 | | 1770 | 1720 | 1670 | 1620 | 1565 | 1510 | 1445 | 1380 | 1320 | 1270 |
| | 13 | | 1880 | 1830 | 1785 | 1735 | 1685 | 1635 | 1580 | 1520 | 1460 | 1400 |
| | 14 | | 1985 | 1935 | 1890 | 1845 | 1800 | 1755 | 1705 | 1655 | 1595 | 1535 |
| | 15 | | 2080 | 2040 | 1995 | 1950 | 1910 | 1865 | 1820 | 1775 | 1720 | 1665 |
| | 16 | | 2185 | 2150 | 2105 | 2065 | 2030 | 1985 | 1945 | 1900 | 1855 | 1810 |
| | 17 | Cooling | 2285 | 2245 | 2205 | 2165 | 2130 | 2090 | 2050 | 2015 | 1975 | 1935 |
| | 18 | | 2425 | 2375 | 2335 | 2285 | 2240 | 2195 | 2145 | 2095 | 2045 | 1990 |

**Manufacturer reserves the right to change, at any time, specifications and designs without notice and without obligations.**

**Air Delivery - CFM (with filter) (Continued)**

| Unit Size | Airflow Setting | Default Setting | External Static Pressure (in. w.c.) | | | | | | | | | |
|---|---|---|---|---|---|---|---|---|---|---|---|---|
| | | | 0.1 | 0.2 | 0.3 | 0.4 | 0.5 | 0.6 | 0.7 | 0.8 | 0.9 | 1 |
| 1202422 | 1 | Cont. Fan | 720 | 610 | 490 | 390 | 290 | 205 | 110 | - | - | - |
| | 2 | | 800 | 695 | 590 | 480 | 390 | 300 | 220 | 135 | - | - |
| | 3 | | 870 | 770 | 675 | 570 | 475 | 395 | 310 | 235 | 155 | - |
| | 4 | | 970 | 880 | 785 | 700 | 605 | 525 | 440 | 365 | 290 | 230 |
| | 5 | | 1060 | 975 | 890 | 805 | 725 | 635 | 555 | 485 | 410 | 345 |
| | 6 | | 1145 | 1070 | 985 | 905 | 830 | 750 | 665 | 595 | 525 | 455 |
| | 7 | | 1250 | 1175 | 1105 | 1025 | 955 | 880 | 805 | 730 | 660 | 595 |
| | 8 | | 1345 | 1280 | 1205 | 1135 | 1065 | 1000 | 930 | 860 | 785 | 725 |
| | 9 | | 1435 | 1370 | 1305 | 1240 | 1170 | 1105 | 1045 | 980 | 910 | 845 |
| | 10 | | 1545 | 1485 | 1425 | 1360 | 1300 | 1235 | 1175 | 1115 | 1050 | 990 |
| | 11 | | 1645 | 1590 | 1530 | 1475 | 1415 | 1350 | 1295 | 1240 | 1180 | 1125 |
| | 12 | | 1740 | 1685 | 1635 | 1580 | 1525 | 1465 | 1410 | 1355 | 1300 | 1250 |
| | 13 | | 1830 | 1775 | 1725 | 1675 | 1620 | 1565 | 1510 | 1455 | 1405 | 1355 |
| | 14 | Heat | 2015 | 1965 | 1920 | 1870 | 1825 | 1775 | 1725 | 1680 | 1630 | 1580 |
| | 15 | | 2035 | 1990 | 1940 | 1895 | 1850 | 1805 | 1760 | 1710 | 1660 | 1615 |
| | 16 | | 2140 | 2095 | 2050 | 2005 | 1960 | 1915 | 1875 | 1830 | 1785 | 1740 |
| | 17 | | 2230 | 2190 | 2150 | 2110 | 2070 | 2025 | 1985 | 1945 | 1905 | 1860 |
| | 18 | Cooling | 2425 | 2385 | 2340 | 2290 | 2240 | 2190 | 2135 | 2080 | 2025 | 1965 |
| 1402422 | 1 | Cont. Fan | 795 | 685 | 585 | 475 | 380 | 290 | 205 | 135 | - | - |
| | 2 | | 900 | 795 | 700 | 605 | 505 | 420 | 340 | 260 | 180 | - |
| | 3 | | 960 | 865 | 775 | 685 | 590 | 500 | 420 | 345 | 265 | 195 |
| | 4 | | 1050 | 960 | 870 | 785 | 700 | 610 | 530 | 455 | 385 | 315 |
| | 5 | | 1160 | 1075 | 985 | 910 | 835 | 755 | 670 | 590 | 525 | 455 |
| | 6 | | 1260 | 1180 | 1100 | 1020 | 950 | 880 | 800 | 720 | 650 | 585 |
| | 7 | | 1355 | 1285 | 1205 | 1130 | 1060 | 995 | 925 | 855 | 775 | 705 |
| | 8 | | 1445 | 1375 | 1300 | 1230 | 1160 | 1095 | 1035 | 970 | 895 | 825 |
| | 9 | | 1545 | 1480 | 1415 | 1345 | 1280 | 1220 | 1155 | 1095 | 1035 | 965 |
| | 10 | | 1650 | 1585 | 1520 | 1460 | 1395 | 1330 | 1275 | 1215 | 1155 | 1100 |
| | 11 | | 1740 | 1680 | 1620 | 1560 | 1500 | 1435 | 1380 | 1320 | 1265 | 1210 |
| | 12 | | 1840 | 1785 | 1725 | 1670 | 1615 | 1555 | 1500 | 1445 | 1390 | 1340 |
| | 13 | | 1940 | 1885 | 1830 | 1775 | 1720 | 1670 | 1610 | 1555 | 1505 | 1450 |
| | 14 | | 2050 | 1995 | 1945 | 1890 | 1840 | 1790 | 1735 | 1680 | 1630 | 1575 |
| | 15 | Heat | 2095 | 2040 | 1990 | 1940 | 1890 | 1840 | 1790 | 1735 | 1680 | 1630 |
| | 16 | | 2150 | 2100 | 2050 | 2000 | 1950 | 1905 | 1855 | 1800 | 1745 | 1695 |
| | 17 | | 2255 | 2205 | 2155 | 2110 | 2060 | 2015 | 1965 | 1915 | 1860 | 1810 |
| | 18 | Cooling | 2420 | 2370 | 2325 | 2280 | 2230 | 2165 | 2095 | 2025 | 1955 | 1880 |

**NOTE:**

1. A filter is required for each return-air inlet. Airflow performance included 3/4-in. (19 mm) washable filter media such as contained in a factory - authorized accessory filter rack. See accessory list. To determine airflow performance without this filter, assume an additional 0.1 in. w.c. available external static pressure.
2. **Adjust the blower airflow setting as necessary for the proper air temperature rise for each installation.**
3. Airflows over 1800 CFM require bottom return, two-side return, or bottom and side return. A minimum filter size of 20” x 25” (508 x 635 mm) is required.
4. For upflow applications, air entering from one side into both the side of the furnace and a return air base counts as a side and bottom return
5. The -- entry indicates unstable operating conditions

**Airflow Settings**

| | Default Airflow Settings* | | Designated Airflow Settings | |
|---|---|---|---|---|
| Unit Size | Heating | Cooling | Heating | Constant Fan |
| 0261410 | 6 | 18 | (5-14) | (1-7) |
| 0401410 | 9 | 18 | (6-11) | (1-1) |
| 0401712 | 8 | 18 | (5-9) | (1-5) |
| 0601412 | 12 | 18 | (9-12) | (1-3) |
| 0601716 | 9 | 18 | (5-10) | (1-7) |
| 0801716 | 12 | 18 | (7-13) | (1-1) |
| 0802120 | 9 | 17 | (5-11) | (1-8) |
| 1002120 | 12 | 18 | (10-12) | (1-4) |
| 1002122 | 11 | 17 | (8-14) | (1-7) |
| 1202422 | 14 | 18 | (11-14) | (1-3) |
| 1402422 | 15 | 18 | (10-15) | (1-1) |

*. Setting #1 is the default setting for Constant Fan

## TYPICAL WIRING SCHEMATIC

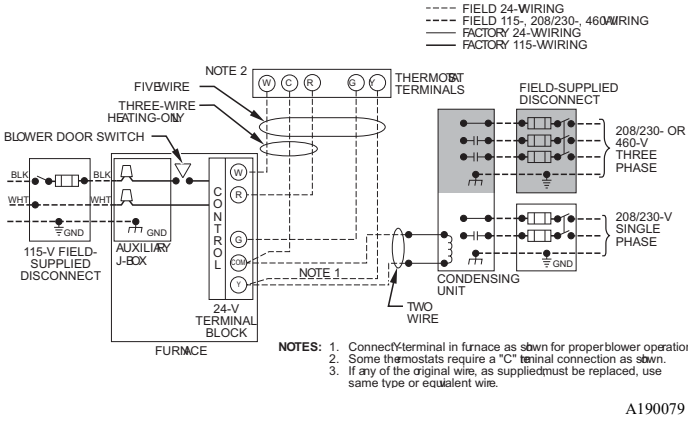


## FURNACE CONTROL BOARD

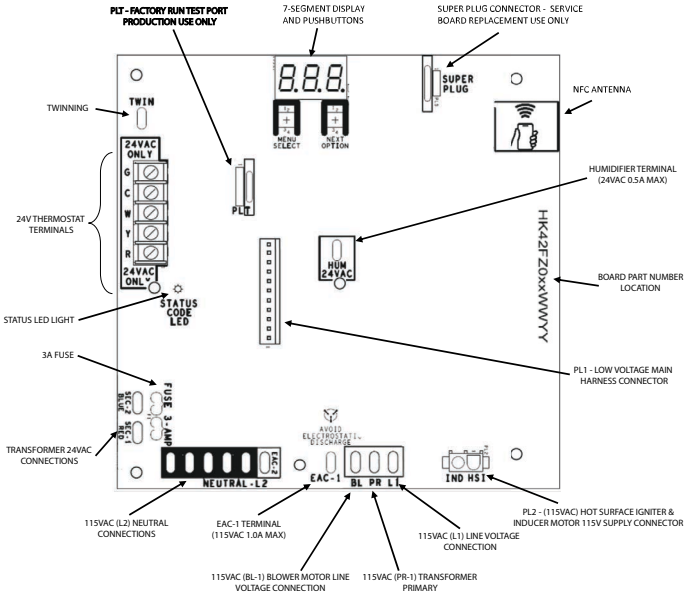


## MAXIMUM ALLOWABLE EXPOSED VENT LENGTH

### Maximum Allowable Exposed Vent Lengths in Unconditioned Space Insulation Table - Ft.

| Winter Design Temp °F | Unit Size | 26,000* BTUH | | | | | |
|---|---|---|---|---|---|---|---|
| | | Uninsulated | | 3/8-in. Insulation | | 1/2-in. Insulation | |
| | Pipe Dia. in. | 1 ½ | 2 | 1 ½ | 2 | 1 ½ | 2 |
| | 20 | 20 | 20 | 50 | 45 | 60 | 50 |
| | 0 | 5 | 5 | 25 | 20 | 30 | 25 |
| | -20 | | | 15 | 10 | 20 | 15 |
| | -40 | | | 10 | 5 | 15 | 10 |

| Winter Design Temp °F | Unit Size | 40,000* BTUH | | | | | | | | | 60,000 BTUH | | | | | | | | | | | |
|---|---|---|---|---|---|---|---|---|---|---|---|---|---|---|---|---|---|---|---|---|---|---|
| | | Uninsulated | | | 3/8-in. Insulation | | | 1/2-in. Insulation | | | Uninsulated | | | | 3/8-in. Insulation | | | | 1/2-in. Insulation | | | |
| | Pipe Dia. in. | 1 ½ | 2 | 2 ½ | 1 ½ | 2 | 2 ½ | 1 ½ | 2 | 2 ½ | 1 ½ | 2 | 2 ½ | 3 | 1 ½ | 2 | 2 ½ | 3 | 1 ½ | 2 | 2 ½ | 3 |
| | 20 | 20 | 20 | 20 | 20 | 50 | 45 | 20 | 60 | 50 | 20 | 30 | 30 | 25 | 20 | 75 | 65 | 60 | 20 | 85 | 75 | 65 |
| | 0 | 10 | 5 | 5 | 20 | 25 | 20 | 20 | 30 | 25 | 15 | 15 | 10 | 10 | 20 | 40 | 30 | 25 | 20 | 45 | 40 | 30 |
| | -20 | 5 | | | 20 | 15 | 10 | 20 | 20 | 15 | 10 | 5 | | | 20 | 25 | 20 | 15 | 20 | 30 | 25 | 20 |
| | -40 | | | | 15 | 10 | 5 | 15 | 15 | 10 | 5 | | | | 20 | 15 | 15 | 10 | 20 | 20 | 15 | 10 |

| Winter Design Temp °F | Unit Size | 80,000 BTUH | | | | | | | | | | | | | | |
|---|---|---|---|---|---|---|---|---|---|---|---|---|---|---|---|---|
| | | Uninsulated | | | | | 3/8-in. Insulation | | | | | 1/2-in. Insulation | | | | |
| | Pipe Dia. in. | 1 ½ | 2 | 2 ½ | 3 | 4 | 1 ½ | 2 | 2 ½ | 3 | 4 | 1 ½ | 2 | 2 ½ | 3 | 4 |
| | 20 | 15 | 40 | 40 | 35 | 30 | 15 | 50 | 90 | 75 | 65 | 15 | 50 | 70 | 70 | 70 |
| | 0 | 15 | 20 | 15 | 10 | 5 | 15 | 50 | 45 | 35 | 30 | 15 | 50 | 50 | 40 | 35 |
| | -20 | 15 | 10 | 5 | | | 15 | 35 | 30 | 20 | 15 | 15 | 40 | 30 | 25 | 15 |
| | -40 | 10 | 5 | | | | 15 | 25 | 20 | 15 | 5 | 15 | 30 | 25 | 20 | 10 |

| Winter Design Temp °F | Unit Size | 100,000 BTUH | | | | | | | | | | | | 120,000 BTUH | | | | | | | | |
|---|---|---|---|---|---|---|---|---|---|---|---|---|---|---|---|---|---|---|---|---|---|---|
| | | Uninsulated | | | | 3/8-in. Insulation | | | | 1/2-in. Insulation | | | | Uninsulated | | | 3/8-in. Insulation | | | 1/2-in. Insulation | | |
| | Pipe Dia. in. | 2 | 2 ½ | 3 | 4 | 2 | 2 ½ | 3 | 4 | 2 | 2 ½ | 3 | 4 | 2 ½ | 3 | 4 | 2 ½ | 3 | 4 | 2 ½ | 3 | 4 |
| | 20 | 20 | 50 | 40 | 35 | 20 | 80 | 95 | 80 | 20 | 80 | 105 | 90 | 10 | 50 | 40 | 10 | 75 | 95 | 10 | 75 | 105 |
| | 0 | 20 | 20 | 15 | 10 | 20 | 55 | 45 | 35 | 20 | 65 | 55 | 45 | 10 | 20 | 15 | 10 | 55 | 45 | 10 | 65 | 50 |
| | -20 | 15 | 10 | 5 | | 20 | 35 | 30 | 20 | 20 | 45 | 35 | 25 | 10 | 10 | | 10 | 35 | 25 | 10 | 45 | 30 |
| | -40 | 10 | 5 | | | 20 | 25 | 20 | 10 | 20 | 30 | 25 | 15 | 10 | 5 | | 10 | 25 | 15 | 10 | 30 | 20 |

**Manufacturer reserves the right to change, at any time, specifications and designs without notice and without obligations.**

| Winter Design Temp °F | Unit Size | 140,000* BTUH | | | | | | | | |
|---|---|---|---|---|---|---|---|---|---|---|
| | | Uninsulated | | | 3/8-in. Insulation | | | 1/2-in. Insulation | | |
| | Pipe Dia. in. | 2 ½ | 3 | 4 | 2 ½ | 3 | 4 | 2 ½ | 3 | 4 |
| | 20 | 5 | 55 | 50 | 5 | 65 | 105 | 5 | 65 | 125 |
| | 0 | 5 | 25 | 15 | 5 | 65 | 50 | 5 | 65 | 60 |
| | -20 | 5 | 10 | 5 | 5 | 45 | 30 | 5 | 50 | 40 |
| | -40 | 5 | 5 | | 5 | 30 | 20 | 5 | 35 | 25 |

*. Not all model families have this size.

## Maximum Allowable Exposed Vent Length in Unconditioned Space - Meters

| Winter Design Temp °C | Unit Size | 26,000* BTUH | | | | | |
|---|---|---|---|---|---|---|---|
| | | Uninsulated | | 3/8-in. Insulation | | 1/2-in. Insulation | |
| | Pipe Dia. mm | 38 | 51 | 38 | 51 | 38 | 51 |
| | -7 | 6.1 | 6.1 | 15.2 | 13.7 | 18.3 | 15.2 |
| | -18 | 1.5 | 1.5 | 7.6 | 6.1 | 9.1 | 7.6 |
| | -29 | | | 4.6 | 3.0 | 6.1 | 4.6 |
| | -40 | | | 3.0 | 1.5 | 4.6 | 3.0 |

| Winter Design Temp °C | Unit Size | 40,000 BTUH | | | | | | | | | 60,000 BTUH | | | | | | | | | | | |
|---|---|---|---|---|---|---|---|---|---|---|---|---|---|---|---|---|---|---|---|---|---|---|
| | | Uninsulated | | | 3/8-in. Insulation | | | 1/2-in. Insulation | | | Uninsulated | | | | 3/8-in. Insulation | | | | 1/2-in. Insulation | | | |
| | Pipe Dia. mm | 38 | 51 | 64 | 38 | 51 | 64 | 38 | 51 | 64 | 38 | 51 | 64 | 76 | 38 | 51 | 64 | 76 | 38 | 51 | 64 | 76 |
| | -7 | 6.1 | 6.1 | 6.1 | 6.1 | 15.2 | 13.7 | 6.1 | 18.3 | 15.2 | 6.1 | 9.1 | 9.1 | 7.6 | 6.1 | 22.9 | 19.8 | 18.3 | 6.1 | 25.9 | 22.9 | 19.8 |
| | -18 | 3.0 | 1.5 | 1.5 | 6.1 | 7.6 | 6.1 | 6.1 | 9.1 | 7.6 | 4.6 | 4.6 | 3.0 | 3.0 | 6.1 | 12.2 | 9.1 | 7.6 | 6.1 | 13.7 | 12.2 | 9.1 |
| | -29 | 1.5 | | | 6.1 | 4.6 | 3.0 | 6.1 | 6.1 | 4.6 | 3.0 | 1.5 | | | 6.1 | 7.6 | 6.1 | 4.6 | 6.1 | 9.1 | 7.6 | 6.1 |
| | -40 | | | | 4.6 | 3.0 | 1.5 | 4.6 | 4.6 | 3.0 | 1.5 | | | | 6.1 | 4.6 | 4.6 | 3.0 | 6.1 | 6.1 | 4.6 | 3.0 |

| Winter Design Temp °C | Unit Size | 80,000 BTUH | | | | | | | | | | | | | | |
|---|---|---|---|---|---|---|---|---|---|---|---|---|---|---|---|---|
| | | Uninsulated | | | | | 3/8-in. Insulation | | | | | 1/2-in. Insulation | | | | |
| | Pipe Dia. mm | 38 | 51 | 64 | 76 | 102 | 38 | 51 | 64 | 76 | 102 | 38 | 51 | 64 | 76 | 102 |
| | -7 | 4.6 | 12.2 | 12.2 | 10.7 | 9.1 | 4.6 | 15.2 | 27.4 | 22.9 | 19.8 | 4.6 | 15.2 | 21.3 | 21.3 | 21.3 |
| | -18 | 4.6 | 6.1 | 4.6 | 3.0 | 1.5 | 4.6 | 15.2 | 13.7 | 10.7 | 9.1 | 4.6 | 15.2 | 15.2 | 12.2 | 10.7 |
| | -29 | 4.6 | 3.0 | 1.5 | | | 4.6 | 10.7 | 9.1 | 6.1 | 4.6 | 4.6 | 12.2 | 9.1 | 7.6 | 4.6 |
| | -40 | 3.0 | 1.5 | | | | 4.6 | 7.6 | 6.1 | 4.6 | 1.5 | 4.6 | 9.1 | 7.6 | 6.1 | 3.0 |

| Winter Design Temp °C | Unit Size | 100,000 BTUH | | | | | | | | | | | | 120,000 BTUH | | | | | | | | |
|---|---|---|---|---|---|---|---|---|---|---|---|---|---|---|---|---|---|---|---|---|---|---|
| | | Uninsulated | | | | 3/8-in. Insulation | | | | 1/2-in. Insulation | | | | Uninsulated | | | 3/8-in. Insulation | | | 1/2-in. Insulation | | |
| | Pipe Dia. mm | 51 | 64 | 76 | 102 | 51 | 64 | 76 | 102 | 51 | 64 | 76 | 102 | 64 | 76 | 102 | 64 | 76 | 102 | 64 | 76 | 102 |
| | -7 | 6.1 | 15.2 | 12.2 | 10.7 | 6.1 | 24.4 | 28.9 | 24.4 | 6.1 | 24.4 | 32.0 | 27.4 | 3.0 | 15.2 | 12.2 | 3.0 | 22.9 | 28.9 | 3.0 | 22.9 | 32.0 |
| | -18 | 6.1 | 6.1 | 4.6 | 3.0 | 6.1 | 16.8 | 13.7 | 10.7 | 6.1 | 19.8 | 16.7 | 13.7 | 3.0 | 6.1 | 4.6 | 3.0 | 16.8 | 13.7 | 3.0 | 19.8 | 15.2 |
| | -29 | 4.6 | 3.0 | 1.5 | | 6.1 | 10.7 | 9.1 | 6.1 | 6.1 | 13.7 | 10.7 | 7.6 | 3.0 | 3.0 | | 3.0 | 10.7 | 7.6 | 3.0 | 13.7 | 9.1 |
| | -40 | 3.0 | 1.5 | | | 6.1 | 7.6 | 6.1 | 3.0 | 6.1 | 9.1 | 7.6 | 4.6 | 3.0 | 1.5 | | 3.0 | 7.6 | 4.6 | 3.0 | 9.1 | 6.1 |

| Winter Design Temp °C | Unit Size | 140,000* BTUH* | | | | | | | | |
|---|---|---|---|---|---|---|---|---|---|---|
| | | Uninsulated | | | 3/8-in. Insulation | | | 1/2-in. Insulation | | |
| | Pipe Dia. mm | 64 | 76 | 102 | 64 | 76 | 102 | 64 | 76 | 102 |
| | -7 | 1.5 | 16.7 | 15.2 | 1.5 | 19.8 | 32.0 | 1.5 | 19.8 | 38.1 |
| | -18 | 1.5 | 7.6 | 4.6 | 1.5 | 19.8 | 15.2 | 1.5 | 19.8 | 18.3 |
| | -29 | 1.5 | 3.0 | 1.5 | 1.5 | 13.7 | 9.1 | 1.5 | 15.2 | 12.2 |
| | -40 | 1.5 | 1.5 | | 1.5 | 9.1 | 6.1 | 1.5 | 35 | 7.6 |

*. Not all model families have this size.

# MAXIMUM EQUIVALENT VENT LENGTH - Ft. (M)

**NOTE:** Maximum Equivalent Vent Length (MEVL) includes standard and concentric vent termination and does NOT include elbows. Use Deductions from Maximum Equivalent Vent Length to determine allowable vent length for each application.

| Unit Size | | 26,000 [2] | | 40,000 [1] | | | 60,000 [2] | | | | 80,000 | | | | | 100,000 [3] | | | | 120,000 | | | 140,000 [3] | | |
|---|---|---|---|---|---|---|---|---|---|---|---|---|---|---|---|---|---|---|---|---|---|---|---|---|---|
| Altitude (feet) | Pipe Dia. (in) | 1 ½ | 2 | 1 ½ | 2 | 2 ½ | 1 ½ | 2 | 2 ½ | 3 | 1 ½ | 2 | 2 ½ | 3 | 4 | 2 | 2 ½ | 3 | 4 | 2 ½ | 3 | 4 | 2 ½ | 3 | 4 |
| | 0-2000 | 70 | 200 | 40 | 155 | 185 | 20 | 100 | 175 | 200 | 15 | 55 | 130 | 175 | 200 | 20 | 80 | 175 | 200 | 10 | 75 | 185 | 5 | 65 | 155 |
| | 2001-3000 | 65 | 190 | 35 | 150 | 175 | | 95 | 165 | 185 | 10 | 49 | 125 | 165 | 185 | 15 | 75 | 165 | 185 | | 70 | 175 | N/A | 60 | 140 |
| | 3001-4000 | 60 | 175 | 30 | 135 | 160 | 16 | 90 | 155 | 175 | | | 115 | 155 | 175 | | | 155 | 175 | 5 | 65 | 165 | | | 120 |
| | 4001-4500 | 55 | 160 | 25 | 130 | 155 | 15 | 85 | 150 | 170 | | 44 | 110 | 150 | 165 | 10 | 70 | | 170 | N/A | 60 | 160 | | 50 | 110 |
| | 4501-5000 | | | | 125 | 145 | | 80 | 145 | 165 | | | | 145 | 160 | | 65 | 150 | 165 | | | | | 45 | 100 |
| | 5001-6000 | 50 | 145 | 20 | 120 | 130 | | 75 | 140 | 155 | | 41 | 100 | 135 | 150 | | | 140 | 155 | | | 155 | | 35 | 80 |
| | 6001-7000 | 45 | 135 | 15 | 110 | 120 | 13 | 70 | 130 | 145 | N/A | 38 | 90 | 125 | 140 | | 60 | 135 | 145 | | 50 | 140 | | 30 | 65 |
| | 7001-8000 | 40 | 120 | 10 | 100 | 110 | 10 | 65 | 120 | 135 | | 36 | | 120 | 125 | N/A | 55 | 125 | 135 | | 46 | 130 | | 25 | 45 |
| | 8001-9000 | 35 | 110 | | 90 | 95 | 5 | 60 | 115 | 125 | | 33 | 80 | 110 | 115 | | 50 | 115 | 125 | | 43 | 120 | | 15 | 30 |
| | 9001-10000 | 30 | 95 | 5 | 80 | 85 | N/A | 55 | 105 | 115 | | 30 | 75 | 100 | 105 | | 45 | 100 | 115 | | 39 | 115 | | 10 | 15 |

**Maximum Equivalent Vent Length - Meters**

| Unit Size | | 26,000 [2] | | 40,000 [1] | | | 60,000 [2] | | | | 80,000 | | | | | 100,000 [3] | | | | 120,000 | | | 140,000 [3] | | |
|---|---|---|---|---|---|---|---|---|---|---|---|---|---|---|---|---|---|---|---|---|---|---|---|---|---|
| Altitude (meters) | Pipe Dia. (mm) | 38 | 51 | 38 | 51 | 64 | 38 | 51 | 64 | 76 | 38 | 51 | 64 | 76 | 102 | 51 | 64 | 76 | 102 | 64 | 76 | 102 | 64 | 76 | 102 |
| | 0-610 | 21.3 | 60.9 | 12.1 | 47.2 | 56.3 | 6.0 | 30.4 | 53.3 | 60.9 | 4.5 | 16.7 | 39.6 | 53.3 | 60.9 | 6.0 | 24.3 | 53.3 | 60.9 | 3.0 | 22.8 | 56.3 | 1.5 | 19.8 | 47.2 |
| | 611-914 | 19.8 | 57.9 | 10.6 | 45.7 | 53.3 | | 28.9 | 50.2 | 56.3 | 3.0 | 14.9 | 38.1 | 50.2 | 56.3 | 4.5 | 22.8 | 50.2 | 56.3 | | 21.3 | 53.3 | N/A | 18.2 | 42.6 |
| | 915-1219 | 18.2 | 53.3 | 9.1 | 41.1 | 48.7 | 4.8 | 27.4 | 47.2 | 53.3 | | | 35.0 | 47.2 | 53.3 | | | 47.2 | 53.3 | 1.5 | 19.8 | 50.2 | | | 36.5 |
| | 1220-1370 | 16.7 | 48.7 | 7.6 | 39.6 | 47.2 | 4.5 | 25.9 | 45.7 | 51.8 | | 13.4 | 33.5 | 45.7 | 50.2 | 3.0 | 21.3 | | 51.8 | NA | 18.2 | 48.7 | | 15.2 | 33.5 |
| | 1371-1524 | | | | 38.1 | 44.1 | | 24.3 | 44.1 | 50.2 | | | | 44.1 | 48.7 | | 19.8 | 45.7 | 50.2 | | | | | 13.7 | 30.4 |
| | 1525-1829 | 15.2 | 44.1 | 6.0 | 36.5 | 39.6 | | 22.8 | 42.6 | 47.2 | | 12.4 | 30.4 | 41.1 | 45.7 | | | 42.6 | 47.2 | | | 47.2 | | 10.6 | 24.3 |
| | 1830-2134 | 13.7 | 41.1 | 4.5 | 33.5 | 36.5 | 3.9 | 21.3 | 39.6 | 44.1 | NA | 11.5 | 27.4 | 38.1 | 42.6 | | 18.2 | 41.1 | 44.1 | | 15.2 | 42.6 | | 9.1 | 19.8 |
| | 2135-2438 | 12.1 | 36.5 | 3.0 | 30.4 | 33.5 | 3.0 | 19.8 | 36.5 | 41.1 | | 10.9 | | 36.5 | 38.1 | | 16.7 | 38.1 | 41.1 | | 14.0 | 39.6 | | 7.6 | 13.7 |
| | 2439-2743 | 10.6 | 33.5 | | 27.4 | 28.9 | 1.5 | 18.2 | 35.0 | 38.1 | | 10.0 | 24.3 | 33.5 | 35.0 | NA | 15.2 | 35.0 | 38.1 | | 13.1 | 36.5 | | 4.5 | 9.1 |
| | 2744-3048 | 9.1 | 28.9 | 1.5 | 24.3 | 25.9 | NA | 16.7 | 32.0 | 35.0 | | 9.1 | 22.8 | 30.4 | 32.0 | | 13.7 | 30.4 | 35.0 | | 11.8 | 35.0 | | 3.0 | 4.5 |

1. 40K Inducer Outlet Restrictor disk (P/N 1185623; 1.25-in. (32 mm) Dia.) shipped in the loose parts bag or available through FAST Parts required under 10-ft. (3 M) TEVL in all orientations. Required for installations from 0 - 2000 ft. (0 to 610 M) above sea level. Failure to use an outlet restrictor may result in flame disturbances or flame sense lock-out.
2. 26K (shipped in loose parts bag) & 60K Inducer Outlet Restrictor disk (P/N 1185623; 1.25-in. (32 mm) Dia. available through FAST Parts) required for less than 5-ft. (1.5 M) TEVL in downflow and horizontal orientations only. Required for installations from 0 - 2000 ft. (0 to 610 M) above sea level.
3. 120K & 140K Inducer Outlet Restrictor disk (P/N 1188589; 1.50-in. (38 mm) Dia. available through FAST Parts) required for less than 5-ft. (1.5 M) TEVL in downflow and horizontal orientations only. Required for installations from 0 - 2000 ft. (0 to 610 M) above sea level.

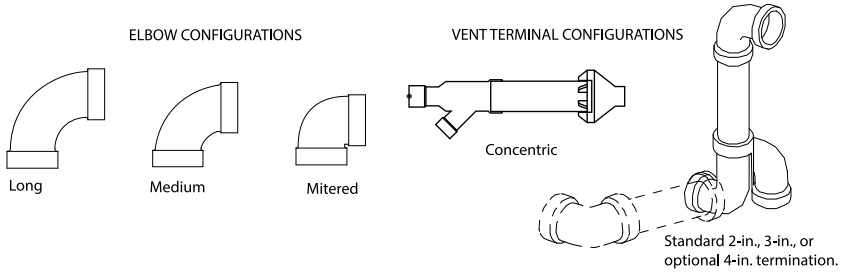


A13110

# Deductions from Maximum Equivalent Vent Length - Ft. (M)

| Pipe Diameter (in): | 1-1/2 | | 2 | | 2-1/2 | | 3 | | 4 | |
|---|---|---|---|---|---|---|---|---|---|---|
| Mitered 90º Elbow | 8 | (2.4) | 8 | (2.4) | 8 | (2.4) | 8 | (2.4) | 8 | (2.4) |
| Medium Radius 90º Elbow | 5 | (1.5) | 5 | (1.5) | 5 | (1.5) | 5 | (1.5) | 5 | (1.5) |
| Long Radius 90º Elbow | 3 | (0.9) | 3 | (0.9) | 3 | (0.9) | 3 | (0.9) | 3 | (0.9) |
| Mitered 45º Elbow | 4 | (1.2) | 4 | (1.2) | 4 | (1.2) | 4 | (1.2) | 4 | (1.2) |
| Medium Radius 45º Elbow | 2.5 | (0.8) | 2.5 | (0.8) | 2.5 | (0.8) | 2.5 | (0.8) | 2.5 | (0.8) |
| Long Radius 45º Elbow | 1.5 | (0.5) | 1.5 | (0.5) | 1.5 | (0.5) | 1.5 | (0.5) | 1.5 | (0.5) |
| Tee | 16 | (4.9) | 16 | (4.9) | 16 | (4.9) | 16 | (4.9) | 16 | (4.9) |
| Concentric Vent Termination | NA | | 0 | (0.0) | NA | | 0 | (0.0) | NA | |
| Standard Vent Termination | 0 | (0.0) | 0 | (0.0) | 0 | (0.0) | 0 | (0.0) | 0 | (0.0) |

**NOTE:**

1. Use only the smallest diameter pipe possible for venting. Over-sizing may cause flame disturbance or excessive vent terminal icing or freeze-up.
2. NA - Not allowed. Pressure switch will not close, or flame disturbance may result.
3. Vent sizing for Canadian installations over 4500 ft (1370 M) above sea level are subject to acceptance by local authorities having jurisdiction.
4. Size both the combustion air and vent pipe independently, then use the larger size for both pipes.
5. Assume the two 45_ elbows equal one 90_ elbow. Wide radius elbows are desirable and may be required in some cases.
6. Elbow and pipe sections within the furnace casing and at the vent termination should not be included in vent length or elbow count.
7. The minimum pipe length is 5 ft. (2 M) linear feet (meters) for all applications.
8. Use 3-in. (76 mm) diameter vent termination kit for installations requiring 4-in. (102 mm) diameter pipe

## Venting System Length Calculations

The Total Equivalent Vent Length (TEVL) for **EACH** combustion air or vent pipe equals the length of the venting system, plus the equivalent length of elbows used in the venting system from Deductions from Maximum Equivalent Vent Length - Ft. (M) Table.

Standard vent terminations or factory accessory concentric vent terminations count for zero deduction.

See vent system manufacturer's data for equivalent lengths of flexible vent pipe or other termination systems. **DO NOT ASSUME** that one foot of flexible vent pipe equals one foot of straight PVC/ABS DWV vent pipe.

Compare the Total Equivalent Vent Length to the Maximum Equivalent Vent Lengths in Maximum Equivalent Vent Length Table.

### Example 1

A direct-vent 60,000 BTUH furnace installed at 2100 ft. (640M). Venting system includes **FOR EACH PIPE:** 70 feet (22 M) of vent pipe, 65 feet (20 M) of combustion air inlet pipe, (3) 90º long-radius elbows, (2) 45º long-radius elbows, and a factory accessory concentric vent kit.

Can this application use 2" (50 mm ND) PVC/ABS DWV vent piping?

| | | | | | | |
|---|---|---|---|---|---|---|
| Measure the required linear length of air inlet and vent pipe; insert the longest of the two here | | | | | 70 ft. (22 M) | Use length of the longer of the vent or air inlet piping system |
| Add equiv length of (3) 90º long-radius elbows (use the highest number of elbows for either the vent or inlet pipe) | 3 | x | 3 ft. (0.9 M) | = | 9 ft. (2.7 M) | From Deductions from Maximum Equivalent Vent Length - Ft. (M) Table. |
| Add equiv length of (2) 45º long-radius elbows (use the highest number of elbows for either the vent or inlet pipe) | 2 | x | 1.5 ft. (0.5 M) | = | 3 ft. (0.9 M) | From Deductions from Maximum Equivalent Vent Length - Ft. (M) Table. |
| Add equiv length of factory concentric vent term | | | | | 0 ft. | From Deductions from Maximum Equivalent Vent Length - Ft. (M) Table. |
| Add correction for flexible vent pipe, if any | | | | | 0 ft. | From Vent Manufacturer's instructions; zero for PVC/ABS DWV |
| Total Equivalent Vent Length (TEVL) | | | | | 82 ft. (25 M) | Add all of the above lines |
| | | | | | | |
| Maximum Equivalent Vent Length (MEVL) | | | | | 95 ft. (29 M) | For 2" pipe from Maximum Equivalent Vent Length Table. |
| Is TEVL less than MEVL? | | | | | YES | Therefore, 2" pipe MAY be used |

### Example 2

A direct-vent 60,000 BTUH furnace installed at 2100 ft. (640M). Venting system includes **FOR EACH PIPE:** 100 feet (30 M) of vent pipe, 95 feet (29 M) of combustion air inlet pipe, (3) 90º long-radius elbows, and a polypropylene concentric vent kit. Also includes 20 feet (6.1 M) of flexible polypropylene vent pipe, included within the 100 feet (30 M) of vent pipe.

VERIFY FROM POLYPROPYLENE VENT MANUFACTURER'S INSTRUCTIONS for the multiplier correction for flexible vent pipe.

Can this application use 60mm o.d. (2") polypropylene vent piping? If not, what size piping can be used?

| | | | | | | |
|---|---|---|---|---|---|---|
| Measure the required linear length of **RIGID** air inlet and vent pipe; insert the longest of the two here: 100 ft. Of rigid pipe - 20 ft. Of flexible pipe | | | | = | 80 ft. (24 M) | Use length of the longer of the vent or air inlet piping system |
| Add equiv length of (3) 90º long-radius elbows (use the highest number of elbows for either the vent or inlet pipe) | 3 | x | 5 ft. (1.5 M) | = | 15 ft. (4.6 M) | Example from polypropylene vent manufacturer's instructions, Verify from vent manufacturer's instructions. |
| Add equiv length of 45º long-radius elbows (use the highest number of elbows for either the vent or inlet pipe) | 0 | x | | = | 0 ft. (0 M) | |
| Add equiv length of factory concentric vent term | 9 | x | 3.3 ft (0.9 M) | = | 30 ft. (9 M) | |
| Add correction for flexible vent pipe, if any | 2* | x | 20 ft. (6.1 M) | = | 40 ft. (12.2 M) | |
| * VERIFY FROM VENT MANUFACTURER'S INSTRUCTIONS; For example only, assume 1 meter of flexible 60mm (2") or 80mm (3") polypropylene pipe equals 2.0 meters (6.5 ft.) of PVC/ABS pipe. | | | | | | |
| Total Equivalent Vent Length (TEVL) | | | | | 165 ft. (50 M) | Add all of the above lines |
| | | | | | | |
| Maximum Equivalent Vent Length (MEVL) | | | | | 95 ft. (29 M) | For 2" pipe from Maximum Equivalent Vent Length Table. |
| Is TEVL less than MEVL? | | | | | NO | Therefore, 60mm (2") pipe may NOT be used; try 80mm (3") |
| | | | | | | |
| Maximum Equivalent Vent Length (MEVL) | | | | | 185 ft. (57 M) | For 3" pipe from Maximum Equivalent Vent Length Table. |
| Is TEVL less than MEVL? | | | | | YES | Therefore, 80mm (3") pipe MAY be used |

## RETURN AIR TEMPERATURE

This furnace is designed for continuous return-air minimum temperature of 60_F (15_C) db or intermittent operation down to 55_F (13_C) db such as when used with a night setback thermometer. Return-air temperature must not exceed 80_F (27_C) db. Failure to follow these return air limits may affect reliability of heat exchangers, motors and controls.

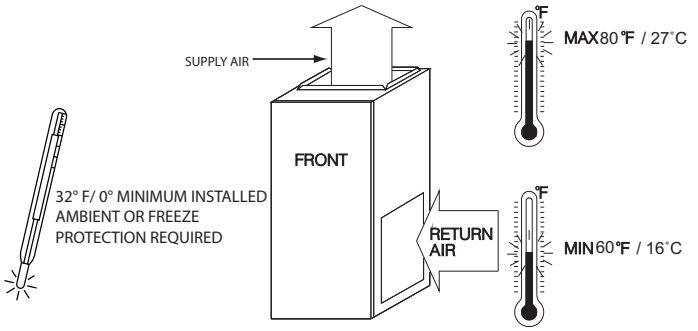


A10490

## MINIMUM CLEARANCES TO COMBUSTIBLE MATERIALS

| POSITION | CLEARANCE |
|---|---|
| Rear | 0 (0 mm) |
| Front (Combustion air openings in furnace and in structure) | 1 in. (25 mm) |
| Required for service* | 24 in. (610 mm)† |
| All Sides of Supply Plenum* | 1 in. (25 mm) |
| Sides | 0 (0 mm) |
| Vent | 0 (0 mm) |
| Top of Furnace | 1 in. (25 mm) |

*. Consult your local building codes
†. Recommended

## COMBUSTION-AIR PIPE FOR NON-DIRECT (1-PIPE) VENT APPLICATION

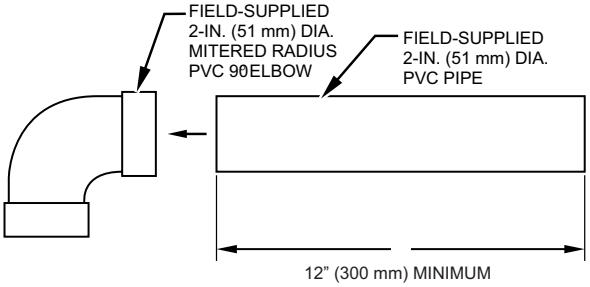


A12376

**NOTE:** See Installation Instructions for specific venting configurations.

## DOWNFLOW SUBBASE

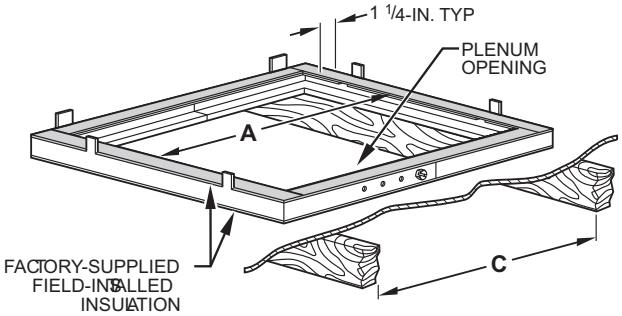


A97427

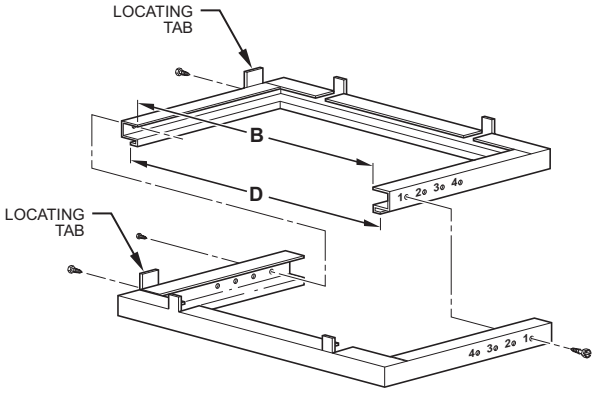


A88207

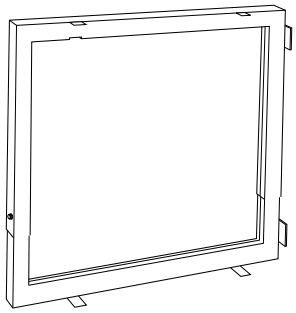

**Downflow Subbase**

A88202

One base fits all furnace sizes. The base is designed to be installed between the furnace and a combustible floor when no coil box is used or when a coil box other than a manufacturer's cased coil is used. It is CSA design certified for use with manufacturer's branded furnaces when installed in downflow applications.

| DIMENSIONS (IN. / MM) | | | | | | |
|---|---|---|---|---|---|---|
| FURNACE CASING WIDTH | FURNACE IN DOWNFLOW APPLICATION | PLENUM OPENING* | | FLOOR OPENING | | HOLE NO. FOR WIDTH ADJUSTMENT |
| | | A | B | C | D | |
| 14-3/16 (360) | Furnace with or without Cased Coil Assembly or Coil Box | 11-3/16 (322) | 19 (483) | 13-7/16 (341) | 20-5/8 (600) | 4 |
| 17-1/2 (445) | Furnace with or without Cased Coil Assembly or Coil Box | 15-1/8 (384) | 19 (483) | 16-3/4 (426) | 20-5/8 (600) | 3 |
| 21 (533) | Furnace with or without Cased Coil Assembly or Coil Box | 18-5/8 (396) | 19 (483) | 20-1/4 (514) | 20-5/8 (600) | 2 |
| 24-1/2 (622) | Furnace with or without Cased Coil Assembly or Coil Box | 22-1/8 (562) | 19 (483) | 23-3/4 (603) | 20-5/8 (600) | 1 |

*. The plenum should be constructed 1/4-in. (6 mm) smaller in width and depth than the plenum dimensions shown above.

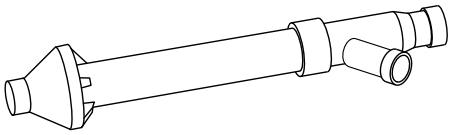

**Concentric Vent Kit**

A93086

A concentric vent kit allows vent and combustion-air pipes to terminate through a single exit in a roof or side wall. One pipe runs inside the other allowing venting through the inner pipe and combustion air to be drawn in through the outer pipe.

## ACCESSORIES

| PART NUMBER | DESCRIPTION | 0261410 | 0401410 | 0401712 | 0601412 | 0601716 |
|---|---|---|---|---|---|---|
| 1188594* | Gas Valve Tower Port Adapter Kit | X | X | X | X | X |
| ACG1425NCB* | External Filter Rack, 14-1/2 x 25” | X | X | - | X | - |
| ACG1625NCF* | External Filter Rack, 16 x 25” | - | - | X | - | X |
| 325531-402* | Washable filter, 3/4” x 16” x 25” | X | X | X | X | X |
| NAHB00101CA | Coil Adapter Kits - No Offset | X | X | X | X | X |
| NAHB00201CA | Coil Adapter Kits - Single Offset | X | X | X | X | X |
| NAHB00301CA | Coil Adapter Kits - Double Offset | X | X | X | X | X |
| NAHA01401RA | Return Air Base (Upflow Applications) 14” wide | X | X | - | X | - |
| NAHA01701RA | Return Air Base (Upflow Applications) 17-1/2” wide | - | - | X | - | X |
| NAHA00101VC | Vent Kit - Through the Cabinet | X | X | X | X | X |
| NAHB00101CT | External Trap Kit | X | X | X | X | X |
| NAHA00110DA | CPVC to PVC Drain Adapters - 1/2” CPVC to 3/4” PVC (10 Pack) | X | X | X | X | X |
| NAHA002CV | Vent Terminal - Concentric - 2” (51 mm) | X | X | X | X | X |
| NAHA001CV | Vent Terminal - Concentric - 3” (76 mm) | - | - | - | X | X |
| NAHA00301VT | Vent Terminal Bracket - 2” (51 mm) | X | X | X | X | X |
| NAHA00401VT | Vent Terminal Bracket - 3” (76 mm) | - | - | - | X | X |
| NAHA00101CK | Polypropylene Inlet Air Pipe Coupling | X | X | X | X | X |
| NAHA00101HV | Horizontal Trap Grommet - Direct Vent | X | X | X | X | X |
| NAHA00101HH | Freeze Protect Kit - Condensate Drain Line Tape | X | X | X | X | X |
| NAHA00201HH | Freeze Protect Kit - Condensate Trap with Heat Pad | X | X | X | X | X |
| NAHA01101SB | Downflow Furnace Base Kit for Combustible Floors | X | X | X | X | X |
| AGAGCANPL01B* | Gas Conversion Kit (Low Capacity) - Nat to LP† | X | - | - | - | - |
| AGAGCAPNL01B* | Gas Conversion Kit (Low Capacity) - LP to Nat† | X | - | - | - | - |
| AGAGC9NPS01C* | Gas Conversion Kit - Nat to LP† | - | X | X | X | X |
| AGAGC9PNS01C* | Gas Conversion Kit - LP to Nat† | - | X | X | X | X |
| AGAGCAMHC01A | Manufactured Home Kit - Gas Conversion† | X | X | X | X | X |
| AGATWNPUA01A | Twinning Kit | - | - | - | - | X |
| NAHA001NK | Condensate Neutralizer Kit | X | X | X | X | X |

*. Order through FAST Parts.
†. Factory authorized and filed installed. Gas conversion kits are CSA recognized.
X = Accessory

## ACCESSORIES (Continued)

| PART NUMBER | DESCRIPTION | 0801716 | 0802120 | 1002120 | 1002122 | 1202420 | 1402422 |
|---|---|---|---|---|---|---|---|
| 1188594* | Gas Valve Tower Port Adapter Kit | X | X | X | X | X | X |
| ACG1625NCF* | External Filter Rack, 16 x 25” | X | - | - | - | - | - |
| ACG2025NCJ* | External Filter Rack, 20 x 25” | - | X | X | X | - | - |
| ACG2424NCL* | External Filter Rack, 24-1/2 x 24” | - | - | - | - | X | X |
| 325531-402* | Washable filter, 3/4” x 16” x 25” | X | - | - | - | - | - |
| 325531-403* | Washable filter, 3/4” x 21” x 25” | - | X | X | X | - | - |
| 325531-404* | Washable filter, 3/4” x 24” x 25” | - | - | - | - | X | X |
| NAHB00101CA | Coil Adapter Kits - No Offset | X | X | X | X | X | X |
| NAHB00201CA | Coil Adapter Kits - Single Offset | X | X | X | X | X | X |
| NAHB00301CA | Coil Adapter Kits - Double Offset | X | X | X | X | X | X |
| NAHA01701RA | Return Air Base (Upflow Applications) 17-1/2” wide | X | - | - | - | - | - |
| NAHA02101RA | Return Air Base (Upflow Applications) 21” wide | - | X | X | X | - | - |
| NAHA02401RA | Return Air Base (Upflow Applications) 24-1/2 wide | - | - | - | - | X | X |
| NAHA00101VC | Vent Kit - Through the Cabinet | X | X | X | X | X | X |
| NAHB00101CT | External Trap Kit | X | X | X | X | X | X |
| NAHA00110DA | CPVC to PVC Drain Adapters - 1/2” CPVC to 3/4” PVC (10 Pack) | X | X | X | X | X | X |
| NAHA002CV | Vent Terminal - Concentric - 2” (51 mm) | X | X | X | X | - | - |
| NAHA001CV | Vent Terminal - Concentric - 3” (76 mm) | X | X | X | X | X | X |
| NAHA00301VT | Vent Terminal Bracket - 2” (51 mm) | X | X | X | X | - | - |
| NAHA00401VT | Vent Terminal Bracket - 3” (76 mm) | X | X | X | X | X | X |
| NAHA00101CK | Polypropylene Inlet Air Pipe Coupling | X | X | X | X | X | X |
| NAHA00101HV | Horizontal Trap Grommet - Direct Vent | X | X | X | X | X | X |
| NAHA00101HH | Freeze Protect Kit - Condensate Drain Line Tape | X | X | X | X | X | X |
| NAHA00201HH | Freeze Protect Kit - Condensate Trap with Heat Pad | X | X | X | X | X | X |
| NAHA01101SB | Downflow Furnace Base Kit for Combustible Floors | X | X | X | X | X | X |
| AGAGC9NPS01C* | Gas Conversion Kit - Nat to LP† | X | X | X | X | X | X |
| AGAGC9PNS01C* | Gas Conversion Kit - LP to Nat† | X | X | X | X | X | X |
| AGAGCAMHC01A | Manufactured Home Kit - Gas Conversion† | X | X | X | X | X | - |
| AGATWNPUA01A | Twinning Kit | X | X | X | - | X | X |
| NAHA001NK | Condensate Neutralizer Kit | X | X | X | X | X | X |

*. Order through FAST Parts.
†. Factory authorized and filed installed. Gas conversion kits are CSA recognized.
X = Accessory

# GUIDE SPECIFICATIONS

## General

### System Description

Furnish a _____ 4-way multipoise gas-fired condensing furnace for use with natural gas or propane (factory-authorized conversion kit required for propane).

### Quality Assurance

Unit will be designed, tested and constructed to the current ANSI Z 21.47/CSA 2.3 design standard for gas-fired central furnaces.

Unit will be third party certified by CSA to the current ANSI Z 21.47/CSA 2.3 design standard for gas-fired central furnaces. Unit will carry the CSA Blue Star® and Blue Flame® labels. Unit efficiency testing will be performed per the current DOE test procedure as listed in the Federal Register.

Unit will be certified for capacity and efficiency and listed in the latest AHRI Consumer's Directory of Certified Efficiency Ratings.

Unit will carry the current Federal Trade Commission Energy Guide efficiency label.

### Delivery, Storage, and Handling

Unit will be shipped as single package only and is stored and handled per unit manufacturer's recommendations.

### Warranty (for inclusion by specifying engineer)

U.S. and Canada only. Warranty certificate available upon request.

## Equipment

### Blower Wheel and ECM Blower Motor

Galvanized blower wheel shall be centrifugal type, statically and dynamically balanced. Blower motor of ECM type shall be permanently lubricated with sealed ball bearings, of _____HP, and have multiple speeds from 600-1200 RPM operating only when 24-VAC motor inputs are provided. Blower motor shall be direct drive and soft mounted to the blower housing to reduce vibration transmission.

### Filters

Furnace shall have reusable-type filters.

Filter shall be _____ in. (mm) x_____ in. (mm).

An accessory highly efficient Media Filter is available as an option. _____ Media Filter.

### Casing

Casing shall be of 0.030 in. thickness minimum, pre-painted steel.

### Draft Inducer Motor

Draft inducer motor shall be single-speed PSC design.

### Primary Heat Exchangers

Primary heat exchangers shall be 3-Pass corrosion-resistant aluminized steel of fold-and-crimp sectional design and applied operating under negative pressure.

### Secondary Heat Exchangers

Secondary heat exchangers shall be of a stainless steel flow-through of fin-and-tube design and applied operating under negative pressure.

## Controls

Controls shall include a micro-processor-based integrated electronic control board with at least 16 service troubleshooting codes displayed via diagnostic flashing LED light on the control, a self-test feature that checks all major functions of the furnace, and a replaceable automotive-type circuit protection fuse. Multiple operational settings available, including blower speeds for heating and cooling.

### Operating Characteristics

Heating capacity shall be _____ Btuh input; _____ Btuh output capacity.

Fuel Gas Efficiency shall be _____AFUE.

Air delivery shall be _____ cfm minimum at 0.50 in. W.C. external static pressure.

Dimensions shall be: depth_____in. (mm); width _____in. (mm); height_____in. (mm) (casing only).

Height shall be_____in. (mm) with A/C coil and _____in. (mm) overall with plenum.

### Electrical Requirements

Electrical supply shall be 115 volts, 60 Hz, single-phase (nominal). Minimum wire size shall be _____AWG; maximum fuse size of HACR-type designated circuit breaker shall be _____ amps.

### Special Features

Refer to section of the product data identifying accessories and descriptions for specific features and available enhancements.

**Manufacturer reserves the right to change, at any time, specifications and designs without notice and without obligations.**

© 2025 Carrier. All rights reserved.

**Manufacturer reserves the right to change, at any time, specifications and designs without notice and withou3 obligations.**