PAR5 Series K
15.2+ SEER2 2-Stage Packaged Air Conditioner System with R-410A Refrigerant
Single and Three Phase
2 to 5 Nominal Tons (Sizes 24-60)

Comfortmaker®
Air Conditioning & Heating

Product Data

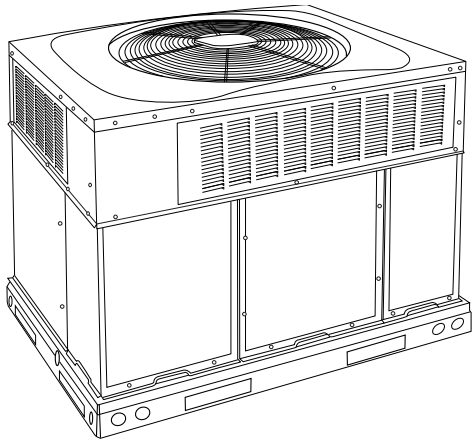

A09033

Fig. 1 – Unit PAR5

Single-Packaged Products with Energy-Saving Features and R-410A refrigerant.

- Up to 16.0 SEER2 / 11.5 EER2
- Factory-Installed TXV
- Multi-speed ECM Blower Motor - Standard
- Sound levels as low as 70dBA
- Two Stages of Cooling
- Dehumidification Feature
- Cabinet air leakage of 2.0% or less at .5 in. W.C. when tested in accordance with ASHRAE standard 193. (Low leak FIOP models only.)

Features/Benefits

One-piece cooling unit with optional electric heater, low sound levels, easy installation, low maintenance, and dependable performance.

Easy Installation

Factory-assembled package is a compact, fully self-contained, electric cooling unit that is prewired, pre-piped, and pre-charged for minimum installation expense. These units are available in a variety of standard cooling sizes with voltage options to meet residential and light commercial requirements. Units are lightweight and install easily on a rooftop or at ground level. The high tech composite base eliminates rust problems associated with ground level applications.

Innovative Unit Base Design

On the inside a high-tech composite material will not rust and incorporates a sloped drain pan which improves drainage and helps inhibit mold, algae and bacterial growth. On the outside metal base rails provide added stability as well as easier handling and rigging.

Convertible duct configuration

Unit is designed for use in either downflow or horizontal applications. Each unit is converted from horizontal to downflow and includes horizontal duct covers. Downflow operation is provided in the field to allow vertical ductwork connections. The basepan seals on the bottom openings to ensure a positive seal in the vertical airflow mode.

Efficient operation High-efficiency design offers SEER2 (Seasonal Energy Efficiency Ratios) of up to 16.0. (See page 3.)

Durable, dependable components

Scroll Compressors have 2 stages of cooling and are designed for high efficiency. Each compressor is hermetically sealed against contamination to help promote longer life and dependable operation. Each compressor also has vibration isolation to provide quieter operation. All compressors have internal high pressure and overcurrent protection.

Multi-speed ECM Blower Motor is standard on all units.

Direct-drive PSC (Permanent Split Capacitor) condenser-fan motors are designed to help reduce energy consumption and provide for cooing operation down to 40°F (4.4°C) outdoor temperature. Motormaster II low ambient kit is available as a field-installed accessory.

Thermostatic Expansion Valve - A hard shutoff, balance port TXV maintains a constant superheat at the evaporator exit (cooling cycle) resulting in higher overall system efficiency.

Refrigerant system is designed to provide dependability. Liquid filter driers are used to promote clean, unrestricted operation. Each unit leaves the factory with a full refrigerant charge. Refrigerant service connections make checking operating pressures easier.

High and Low Pressure Switches provide added reliability for the compressor.

Indoor and Outdoor coils are computer-designed for optimum heat transfer and efficiency. The indoor coil is fabricated from copper tube and aluminum fins and is located inside the unit for protection against damage. The outdoor coil is internally mounted on the top tier of the unit.

Low sound ratings ensure a quiet indoor and outdoor environment with sound ratings as low as 70dBA. (See page 3.)

Easy to service cabinets provide easy 3 panel accessibility to serviceable components during maintenance and installation. The basepan with integrated drain pan provides easy ground level installation with a mounting pad. A nesting feature ensures a positive basepan to roof curb seal when the unit is roof mounted. A convenient 3/4-in. (19.05 mm) wide perimeter flange makes frame mounting on a rooftop easy.

Dehumidification Feature

This unit has independent fan speeds for low stage cooling and high stage cooling. In addition, 208/230 VAC models have the field-selectable capability to run enhanced dehumidification ('DHUM') speed on high stage cooling and low stage cooling (as low as 320CFM per ton). Coupled with the improved dehumidification associated with low stage cooling, the DHUM speeds allow for a complete dehumidification solution independent of cooling stage. The dehumidification control must open the control circuit on humidity rise above the dehumidification set point.

NOTE: The enhanced dehumidification feature on high stage cooling does not support use of an economizer.

Standard horizontal metal duct covers with insulation come with the unit and cover the horizontal duct openings. These can be left in place if the units are converted to downflow.

Cabinets are constructed of heavyduty, phosphated, zinc-coated prepainted steel capable of withstanding 500 hours in salt spray. Interior surfaces of the evaporator/electric heater compartment are insulated with foil-faced insulation, which keeps the conditioned air from being affected by the outdoor ambient temperature and provides improved indoor air quality. (Conforms to American Society of Heating, Refrigeration and Air Conditioning Engineers No. 62P.) The sloped drain pan minimizes standing water in the drain. An external drain is provided.

Limited Warranty*

- Default 5-year parts limited warranty
  - 10-year parts limited warranty with timely registration. Equipment must be registered within 90 days of original installation, except in jurisdictions where warranty benefits cannot be conditioned on registration.

* Applies to original purchaser/homeowner and 5 years to subsequent owners.

- Default 5-year on compressor limited warranty
  -10-year on compressor limited warranty with timely registration. Equipment must be registered within 90 days of original installation, except in jurisdictions where warranty benefits cannot be conditioned on registration.

* Applies to original purchaser/homeowner and 5 years to subsequent owners.

Table of Contents

Features/Benefits 1
Model Number Nomenclature 2
AHRI* Capacities 3
Physical Data 5
Performance Data 10
Typical Piping and Wiring 17
Application Data 17
Electrical Data 18
Controls 23
Guide Specifications 24

Model Number Nomenclature

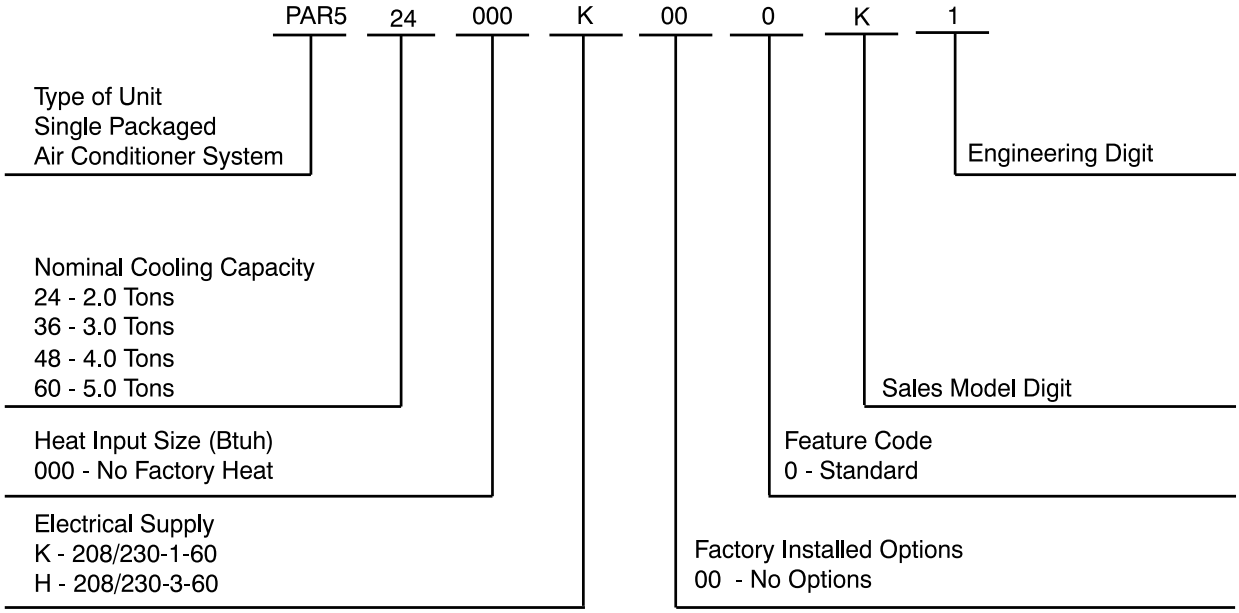

ASHRAE 90.1 COMPLIANT

c UL US LISTED

AHRI CERTIFIED™ www.ahridirectory.org

Use of the AHRI Certified TM Mark indicates a manufacturer's participation in the program For verification of certification for individual products, go to www.ahridirectory.org.

ENERGY STAR

SAP ORDERING NO.	NOMINAL COOLING CAPACITY (Btuh)	VOLTS-PHASE (60 HZ)	APPROX SHIP WT (LB)
PAR524000K000K	24,000	208/230-1	327
PAR536000K000K	36,000	208/230-1	389
PAR536000H000K	36,000	208/230-3	389
PAR548000K000K	48,000	208/230-1	444
PAR548000H000K	48,000	208/230-3	444
PAR560000K000K	60,000	208/230-1	464
PAR560000H000K	60,000	208/230-3	464

AHRI* Capacities

Cooling Capacities and Efficiencies

Model Size	Nominal Tons	Standard CFM (High / Low Stage)	Net Cooling Capacities - Btuh (High Stage)	EER2 @A**	SEER2†
24	2	800 / 600	22000	11.5	15.2
36	3	1200 / 900	34800	11.5	15.2
48	4	1600 / 1200	46500	11.8	16.0
60	5	1750 / 1200	56000	11.5	15.2

LEGEND
dB-Sound Levels (decibels)
db—Dry Bulb
SEER—Seasonal Energy Efficiency Ratio
wb—Wet Bulb
COP-Coefficient of Performance
* Air Conditioning, Heating & Refrigeration Institute.
**At “A” conditions-80°F (26.7°C) indoor db/67°F (19.4°C) indoor wb & 95°F (35°C) outdoor db.
†Rated in accordance with U.S. Government DOE Department of Energy) test procedures and/or AHRI Standards 210/240.
Notes:
1. Ratings are net values, reflecting the effects of circulating fan heat.
Ratings are based on:
Cooling Standard: 80°F (26.7°C) db, 67°F wb (19.4°C) indoor entering-air temperature and 95°F db (35°C) outdoor entering-air temperature.
2. Before purchasing this appliance, read important energy cost and efficiency information available from AHRIdirectory.org.

A-Weighted Sound Power Level (dBA)

Model Size	Sound Ratings (dBA)	TYPICAL OCTAVE BAND SPECTRUM (dBA without tone adjustment)						
		125	250	500	1000	2000	4000	8000
24	70	54.9	58.1	57.9	60.1	55.3	54.5	47.4
36	73	62.5	65.5	67.5	68.0	65.5	60.0	52.5
48	72	60.0	63.5	66.0	67.0	63.5	58.5	49.5
60	75	69.0	67.0	69.0	68.0	65.0	61.5	54.0

NOTE: Tested in compliance with AHRI 270 but not listed with AHRI.

Manufacturer reserves the right to change, at any time, specifications and designs without notice and without obligations.

Accessories

DESCRITPION		USED WITH	PART NO.
Flat Roof Curbs	14-in.	24	CPRFCURB011B00
		36-60	CPRFCURB013B00
Adapter Curb	Small Cabinet	24	CPADCURB001A00
	Large Cabinet	36-60	CPADCURB002A00
Gasket Kit for existing roof curb with new base rail unit		All	CPGSKTKIT001A00
Concentric Adapters for 18-in. round duct (use with curb CPRFCURB011B00)		Small Curb	NPCONADP001A00
Concentric Adapters for 18-in. round duct (use with curb CPRFCURB013B00)		Large Curb	NPCONADP002A00
Vertical Economizer with Jade Honeywell W7220 controller, Honeywell communicating actuator, and dry bulb sensor. (Contact MicroMetl Customer Service at 1-800-662-4822 to order.)		24	ECD-SDSML-JC2-ADB*
		36	ECD-SDLGS-JC2-ADB*
		48-60	ECD-SDLGB-JC2-ADB*
Horizontal Economizer with Jade Honeywell W7220 controller, Honeywell communicating actuator, and dry bulb sensor. (Contact MicroMetl Customer Service at 1-800-662-4822 to order.)		24	ECH-SDSML-JC2-ADB*
		36	ECH-SDLGS-JC2-ADB*
		48-60	ECH-SDLGB-JC2-ADB*
Manual Outside Air Damper - External w/Filter Rack and 1-in. filters		24	CPMANDPR007A00
		36	CPMANDPR008A00
		48-60	CPMANDPR009A00
Internal Filter Rack (includes 1-in. filters)		24	CPFILTRK007A00
		36	CPFILTRK008A00
		48-60	CPFILTRK009A00
Low Ambient Control		All	CPLOWAMB001A00
Five Minute Compressor Delay		All	NRTIMEGD001A00
Square-to-Round Duct Transitions (1 set of 2)		24-48	NPDUCFLG002A00
Compressor Start Kit		All Single Phase	NPHSTART002A00
240V Crankcase Heater		24-36 (208/230-1)	CPCRKHTR008A00
		36 (208/230-3)	Standard
		48 (208/230-1	CPCRKHTR004A00
		60 (208/230-1)	Standard
		48-60 208/230-3)	Standard
Dual Point Kit		All	CPDUALPT001A00

* Contact MicroMetl Customer Service at 1-800-662-4822 to order.

Physical Data

UNIT SIZE	24	36	48	60
NOMINAL CAPACITY (ton)	2	3	4	5
SHIPPING WEIGHT lb. SHIPPING WEIGHT (kg)	327 148.3	389 176.4	444 201.4	464 210.5
COMPRESSORS	2-Stage Scroll			
Quantity	1			
REFRIGERANT (R-410A) Quantity lb Quantity (kg)	7.05 3.2	8.1 3.7	10.8 4.9	12.1 5.5
REFRIGERANT METERING DEVICE	TXV			
OUTDOOR COIL Rows...Fins/in. Face Area (sq ft)	1...21 13.6	2...21 13.6	2...21 19.4	2...21 21.4
OUTDOOR FAN Nominal Cfm Diameter in. Diameter (mm) Motor Hp (Rpm)	2500 24 609.6 1/10 (810)	3000 26 660.4 1/5 (810)	3300 26 660.4 1/5 (810)	3600 26 660.4 1/5 (810)
INDOOR COIL Rows...Fins/in. Face Area (sq ft)	3...17 3.7	3...17 4.7	3...17 5.7	3...17 5.7
INDOOR BLOWER Nominal Low Stage Cooling Airflow (Cfm) Nominal High Stage Cooling Airflow (Cfm) Size in. Size (mm.) Motor HP (RPM)	600 800 10x10 254x254 1/2 (1050)	900 1200 11x10 279.4x254 3/4 (1000)	1200 1600 11x10 279.4x254 1.0 (1075)	1200 1750 11x10 279.4x254 1.0 (1075)
HIGH-PRESSURE SWITCH (psig) Cut-out Reset (Auto)	650 +/- 15 420 +/- 25			
LOW-PRESSURE SWITCH (psig) cut-out Reset (auto)	50 +/- 7 95 +/- 7			
DUCT RETURN-AIR FILTERS†} Throwaway Size in. Throwaway Size (mm)	20x20x1 508x508x25	24x30x1 610x762x25	24x36x1 610x914x25	

†Required filter sizes shown are based on the larger of the AHRI (Air Conditioning Heating and Refrigeration Institute) rated cooling airflow or the heating airflow velocity of 300 ft/minute for throwaway type or 450 ft/minute for high-capacity type. Air filter pressure drop for non-standard filters must not exceed 0.08 in. W.C.
‡If using accessory filter rack refer to the filter rack installation instructions for correct filter sizes and quantity.

Unit Dimensions - 24

COOLING CAPACITY	UNIT WT.		UNIT HEIGHT IN/MM	CENTER OF GRAVITY IN/MM		
	LB	KG	"A"	X	Y	Z
24	327	148.3	45-3/4 1121	20-1/2 520.7	15-3/4 400.1	16-5/8 422.3

UNIT	CORNER WEIGHT LB/KG				
	"1"	"2"	"3"	"4"	
24	39.2 [22.2	52.3 [29.7	78.5 [44.5	130.8 [51.9	

NOTE: 1. ALL TABLE DATA RELEVANT FOR ALL FACTORY INSTALLED OPTIONS EXCEPT ECONOMIZER.
2. * - INDICATES ALL FIOP CODES FOR THE MODELS LISTED.

REQUIRED CLEARANCES TO COMBUSTIBLE MATL.

	INCHES [MM]
TOP OF UNIT	14 [355.6]
SIDE OF UNIT	2 [50.8]
DUCT SUPPLY DUCTS	14 [355.6]
BOTTOM OF UNIT	0 [0.0]
ELECTRICAL PANEL	36 [914.4]

NEC. REQUIRED CLEARANCES.

	INCHES [MM]
BETWEEN UNITS, POWER ENTRY SIDE	42 [1066.8]
UNIT AND UNGROUNDED SURFACES, POWER ENTRY SIDE	36 [914.0]
UNIT AND BLOCK OR CONCRETE WALLS AND OTHER GROUNDED SURFACES, POWER ENTRY SIDE	42 [1066.8]

REQUIRED CLEARANCE FOR OPERATION AND SERVICING

	INCHES [MM]
EVAP. COIL ACCESS SIDE	36 [914.0]
POWER ENTRY SIDE (EXCEPT FOR NEC REQUIREMENTS)	42 [1066.8]
UNIT TOP	48 [1219.2]
SIDE OPPOSITE DUCTS	36 [914.0]
DUCT PANEL	12 [304.8]*

*MINIMUM DISTANCES-IF UNIT IS PLACED LESS THAN 12 [304.8] FROM WALL SYSTEM,THEN SYSTEM PERFORMANCE MAYBE COMPROMISED.

DIMENSIONS IN [] ARE IN MILLIMETERS

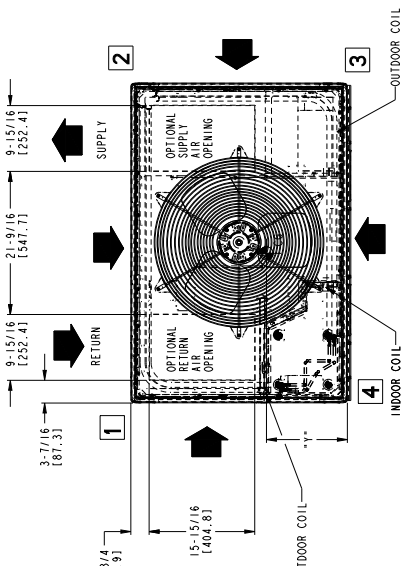

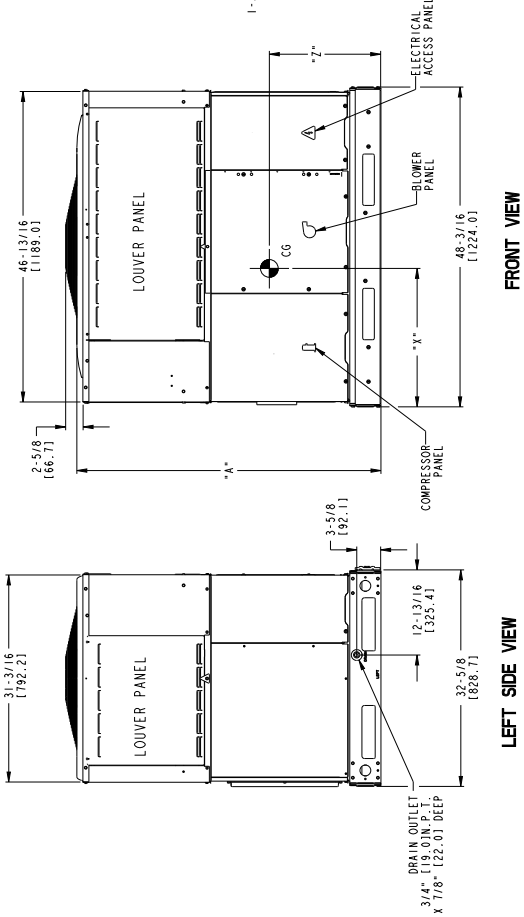

A230031

Unit Dimensions - 36-60

COOLING CAPACITY	UNIT WT.		UNIT HEIGHT IN/MM		CENTER OF GRAVITY IN/MM					
	LB	KG	"A"		X		Y		Z	
36	389	176.4	44-3/4	1137	20-1/4	514.4	17-1/2	444.5	17-5/8	447.7
48	444	201.4	50-3/4	1289	20-1/4	514.4	17-1/2	444.5	17-5/8	447.7
60	464	210.5	52-3/4	1340	20-1/4	514.4	17-1/2	444.5	18	457.2

UNIT	CORNER WEIGHTS LB/KG							
	"1"		"2"		"3"		"4"	
36	46.7	26.5	62.2	35.3	93.4	52.9	155.6	61.8
48	53.3	30.2	71.0	40.3	106.6	60.4	177.6	70.5
60	55.7	31.6	74.2	42.1	111.4	63.1	185.6	73.7

NOTE: 1. ALL TABLE DATA RELEVANT FOR ALL FACTORY INSTALLED OPTIONS EXCEPT ECONOMIZER.
2. * - INDICATES ALL FIOP CODES FOR THE MODELS LISTED.

REQUIRED CLEARANCES TO COMBUSTIBLE MATL.

	INCHES [MM]
TOP OF UNIT	14 [355.6]
DUCT SIDE OF UNIT	2 [50.8]
SIDE OPPOSITE DUCTS	14 [355.6]
BOTTOM OF UNIT	0 [0.0]
ELECTRICAL PANEL	36 [914.4]

NEC. REQUIRED CLEARANCES.

	INCHES [MM]
BETWEEN UNITS, POWER ENTRY SIDE	42 [1066.8]
UNIT AND UNGROUNDED SURFACES, POWER ENTRY SIDE	36 [914.0]
UNIT AND BLOCK OR CONCRETE WALLS AND OTHER GROUNDED SURFACES, POWER ENTRY SIDE	42 [1066.8]

REQUIRED CLEARANCE FOR OPERATION AND SERVICING

	INCHES [MM]
EVAP. COIL ACCESS SIDE	36 [914.0]
POWER ENTRY SIDE	42 [1066.8]
(EXCEPT FOR NEC REQUIREMENTS)	
UNIT TOP	48 [1219.2]
SIDE OPPOSITE DUCTS	36 [914.0]
DUCT PANEL	12 [304.8]*

*MINIMUM DISTANCES: IF UNIT IS PLACED LESS THAN 12 [304.8] FROM WALL SYSTEM, THEN SYSTEM PERFORMANCE MAY BE COMPROMISED.
DIMENSIONS IN [] ARE IN MM

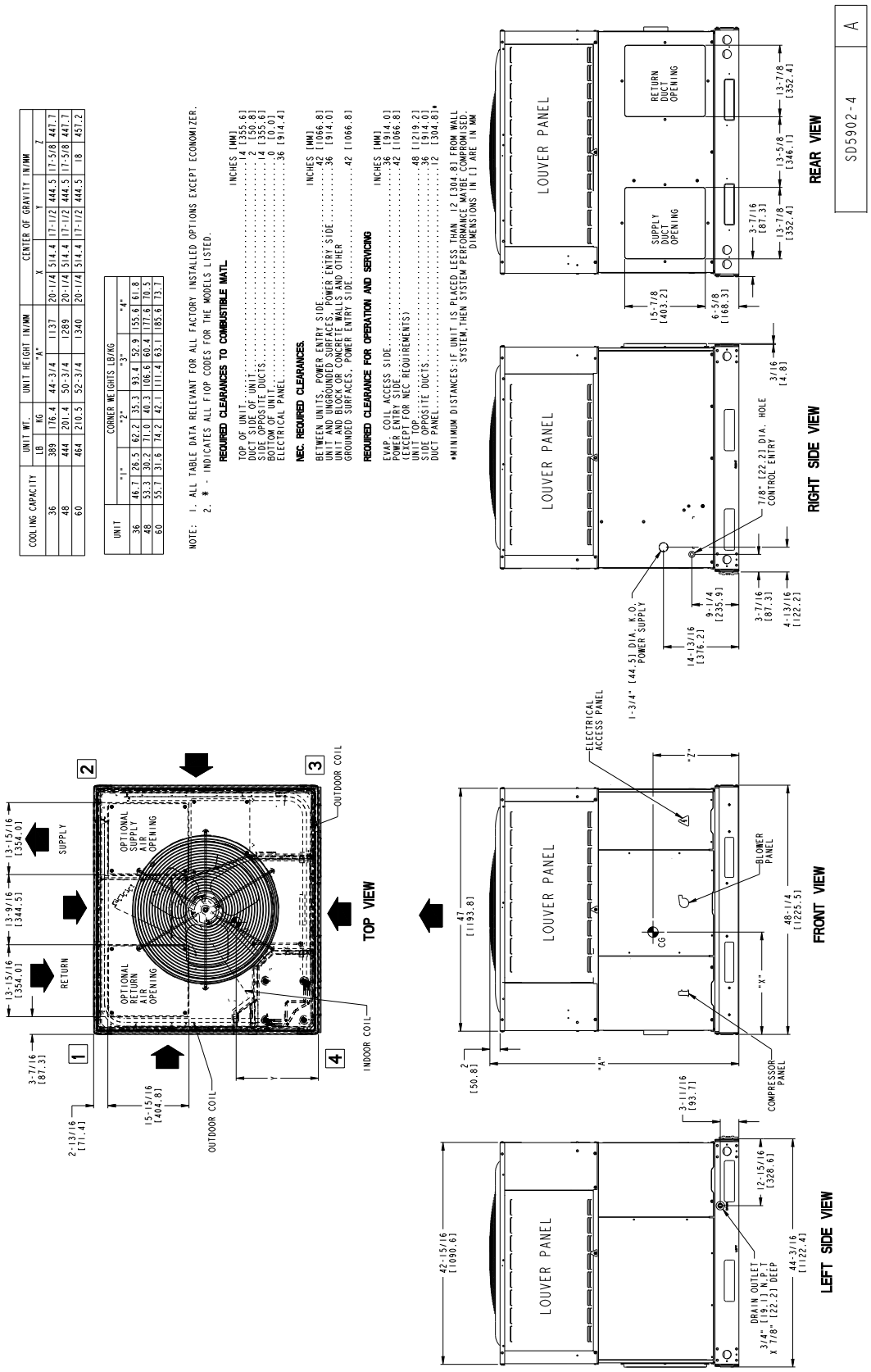

A230032

Roof Curb Accessory

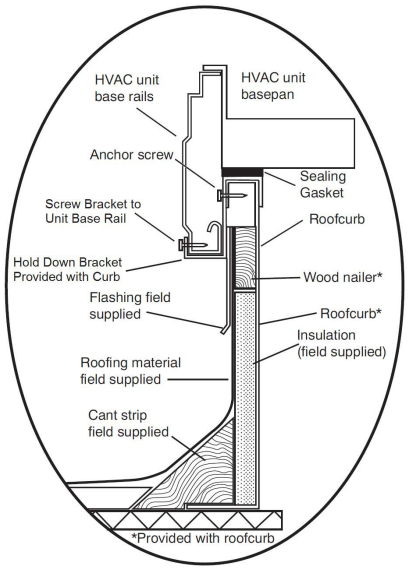

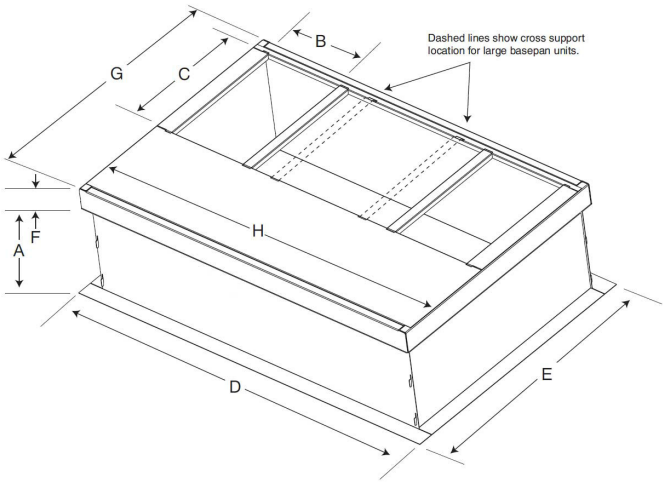

SMALL/COMMON CURB

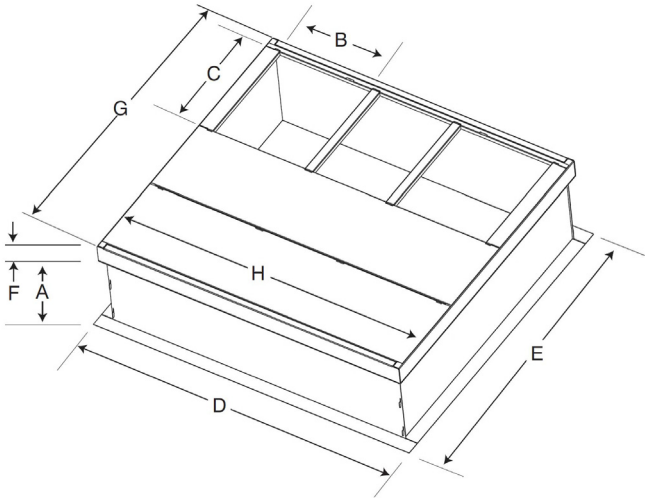

LARGE CURB

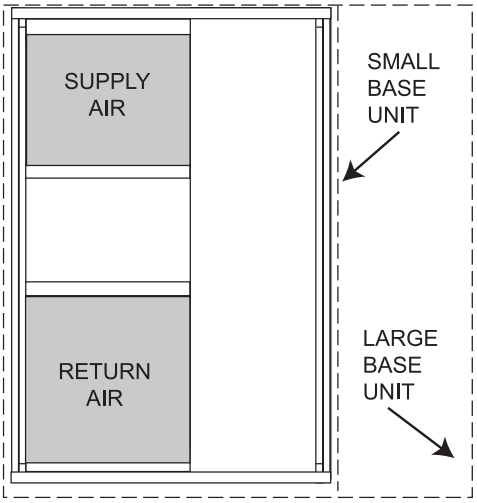

UNIT PLACEMENT ON COMMON CURB

SMALL OR LARGE BASE UNIT

A180216

UNIT SIZE	CATALOG NUMBER	A IN. (mm)	B (small/common base) IN. (mm)*	B (large base) IN. (mm)*	C IN. (mm)	D IN. (mm)	E IN. (mm)	F IN. (mm)	G IN. (mm)	H IN. (mm)
Small or Large	CPRFCURB011B00	14 (356)	10 (254)	14 (356)	16 (406)	47.8 (1214)	32.4 (822)	2.7 (69)	30.6 (778)	46.1 (1170)
Large	CPRFCURB013B00	14 (356)	14 (356)				43.9 (1116)		42.2 (1072)	

*. Part Number CPRCURB011B00 can be used on both small and large basepan units. The cross supports must be located based on whether the unit is a small basepan or a large basepan.

NOTES:
1. Roof curb must be set up for unit being installed.
2. Seal strip must be applied, as required, to unit being installed.
3. Roof curb is made of 16-gauge steel.
4. Attach ductwork to curb (flanges of duct rest on curb).
5. Insulated panels: 1-in. (25.4 mm) thick fiberglass 1 lb. density.

Manufacturer reserves the right to change, at any time, specifications and designs without notice and without obligations.

Selection Procedure (with example)

Determine cooling and heating requirements at design conditions:

Given:

Required Cooling Capacity (TC) ..... 34,000 Btuh

Sensible Heat Capacity (SHC) ..... 24,000 Btuh

Required Heating Capacity ..... 12,500 Btuh

Condenser Entering Air Temperature ..... 95°F(35°C)

Indoor-Air Temperature ..... 80°F (26°C) edb
..... 67°F (19°C) ewb

Evaporator Air Quantity ..... 1200 CFM

External Static Pressure ..... 0.20 IN. W.C.

Electrical Characteristics 208-1-60

Select unit based on required cooling capacity.

Enter Net Cooling Capacities table at condenser entering temperature of 95°F (35°C), indoor air entering at 1200 cfm and 67°F (19°C) ewb (entering wet bulb). The unit will provide a total capacity of 34,800 Btuh and a SHC of 26,310 Btuh.

Select electric heat.

The required heating capacity is 15,000 Btuh.

Determine additional electric heat capacity in kW.

$$\frac{15{,}000 \text{ Btuh}}{3414 \text{ Btuh/kW}} = 4.4 \text{ kW of heat required}$$

Enter the electric Heater Packages table for 208/240, single-phase, 36 unit. The 5 kW heater at 240v most closely satisfies the heating required. To calculate kW at the 208v, multiply the heater kW by multiplication factor 0.75 found in the Wattage Multiplication Factors table.

5 kW x 0.75 = 3.75 kW

3.75 kW x 3414 = 12802.50 Btuh

Determine fan speed and power requirements at design conditions.

Before entering the air delivery tables, calculate the total static pressure required. From the given example, the Wet Coil Pressure Drop Table, and the Filter Pressure Drop Table:

External Static Pressure	0.200 IN. W.C.
Filter	0.06 IN. W.C.
Wet Coil Pressure Drop	0.06 IN. W.C.
Total Static Pressure	0.320 IN. W.C.

Enter the table for Wet Coil Air Delivery—horizontal discharge. At 0.5 IN. W.C. ESP (external static pressure) and medium speed, the fan will deliver 1199 cfm.

Select unit that corresponds to power source available.

The Electrical Data Table shows that the unit is designed to operate at 208-1-60.

Performance Data

024 Low Cool

EVAPORATOR AIR		CONDENSER ENTERING AIR TEMPERATURES deg F																	
		75 (23.9)			85 (29.4)			95 (35)			105 (40.6)			115 (46.1)			125 (51.7)		
CFM	EWB	Capacity MBtuh		Total Syst KW	Capacity MBtuh		Total Syst KW	Capacity MBtuh		Total Syst KW	Capacity MBtuh		Total Syst KW	Capacity MBtuh		Total Syst KW	Capacity MBtuh		Total Syst KW
		Total	Sens		Total	Sens		Total	Sens		Total	Sens		Total	Sens		Total	Sens	
525	57 (13.8)	16.66	16.66	0.95	15.25	15.25	1.18	13.98	13.98	1.36	12.67	12.67	1.48	11.26	11.26	1.67	10.00	10.00	1.88
	62 (16.6)	17.31	16.52	0.95	15.67	15.39	1.18	14.38	14.38	1.36	13.02	13.02	1.48	11.57	11.57	1.67	10.27	10.27	1.88
	63* (17.2)	17.65	13.33	0.95	15.98	12.44	1.18	14.52	10.79	1.36	13.00	9.78	1.48	11.43	8.25	1.67	9.94	7.24	1.88
	67 (19.4)	18.98	13.89	0.96	17.18	12.96	1.19	15.60	11.24	1.37	13.98	10.18	1.48	12.29	8.60	1.67	10.68	7.54	1.88
	72 (22.2)	20.69	11.11	0.97	18.73	10.24	1.21	17.05	8.85	1.39	15.24	7.94	1.49	13.39	6.62	1.69	11.65	5.65	1.90
600	57 (13.8)	17.47	17.47	0.98	15.99	15.99	1.21	14.66	13.72	1.38	13.29	11.96	1.50	11.81	9.73	1.70	10.48	8.07	1.91
	62 (16.6)	17.66	17.17	0.98	15.99	15.99	1.21	14.67	13.72	1.38	13.29	11.96	1.50	11.81	9.73	1.70	10.48	8.07	1.91
	63* (17.2)	17.85	13.85	0.98	16.16	12.93	1.21	14.69	11.21	1.38	13.15	10.16	1.50	11.56	8.57	1.70	10.05	7.52	1.91
	67 (19.4)	19.20	14.43	0.99	17.38	13.47	1.22	15.78	11.68	1.40	14.14	10.58	1.50	12.43	8.93	1.70	10.81	7.83	1.91
	72 (22.2)	20.93	11.54	1.00	18.94	10.64	1.23	17.24	9.19	1.41	15.41	8.25	1.52	13.55	6.88	1.71	11.78	5.87	1.92
675	57 (13.8)	18.08	18.08	1.00	16.55	16.55	1.23	15.17	14.67	1.41	13.75	12.78	1.53	12.22	10.40	1.72	10.85	8.62	1.93
	62 (16.6)	18.28	18.28	1.00	16.55	16.55	1.23	15.19	14.67	1.41	13.75	12.78	1.53	12.22	10.40	1.72	10.85	8.62	1.93
	63* (17.2)	18.48	14.80	1.00	16.73	13.82	1.23	15.20	11.98	1.41	13.61	10.85	1.53	11.96	9.16	1.72	10.40	8.04	1.93
	67 (19.4)	19.87	15.42	1.01	17.99	14.39	1.24	16.33	12.48	1.42	14.63	11.31	1.53	12.86	9.55	1.72	11.18	8.37	1.93
	72 (22.2)	21.66	12.34	1.02	19.61	11.37	1.25	17.85	9.82	1.43	15.95	8.82	1.54	14.02	7.35	1.74	12.19	6.28	1.95

See Legend and Notes on page 14.

024 High Cool

EVAPORATOR AIR		CONDENSER ENTERING AIR TEMPERATURES °F (°C)																	
		75 (23.9)			85 (29.4)			95 (35)			105 (40.6)			115 (46.1)			125 (51.7)		
CFM	EWB °F (°C)	Capacity MBtuh		Total Sys KW	Capacity MBtuh		Total Sys KW	Capacity MBtuh		Total Sys KW	Capacity MBtuh		Total Sys KW	Capacity MBtuh		Total Sys KW	Capacity MBtuh		Total Sys KW
		Total	Sens		Total	Sens		Total	Sens		Total	Sens		Total	Sens		Total	Sens	
700	57 (13.8)	21.77	21.77	1.54	21.04	21.04	1.69	19.67	19.67	1.89	18.91	18.91	2.12	17.90	17.90	2.33	16.84	16.84	2.60
	62 (16.6)	22.62	21.24	1.54	21.62	20.83	1.69	20.23	19.24	1.89	19.43	18.32	2.12	18.39	16.78	2.33	17.30	15.35	2.60
	63* (17.2)	23.07	17.13	1.54	22.05	16.66	1.69	20.44	15.72	1.89	19.39	15.56	2.12	18.17	14.78	2.33	16.74	14.30	2.60
	67 (19.4)	24.80	17.85	1.56	23.71	17.36	1.71	21.95	16.37	1.91	20.85	16.21	2.12	19.54	15.39	2.33	18.00	14.90	2.60
	72 (22.2)	27.04	14.28	1.57	25.84	13.71	1.73	23.99	12.89	1.92	22.73	12.64	2.14	21.29	11.85	2.35	19.62	11.32	2.63
800	57 (13.8)	22.83	22.83	1.57	22.06	21.82	1.73	20.62	19.99	1.92	19.82	19.03	2.15	18.77	17.43	2.36	17.66	15.95	2.63
	62 (16.6)	23.08	22.07	1.57	22.06	21.64	1.73	20.65	19.99	1.92	19.82	19.03	2.15	18.77	17.43	2.36	17.66	15.95	2.63
	63* (17.2)	23.33	17.80	1.57	22.30	17.31	1.73	20.67	16.33	1.92	19.61	16.17	2.15	18.37	15.35	2.36	16.93	14.86	2.63
	67 (19.4)	25.09	18.54	1.59	23.98	18.03	1.74	22.20	17.01	1.94	21.09	16.84	2.15	19.76	15.99	2.36	18.20	15.48	2.63
	72 (22.2)	27.34	14.83	1.60	26.13	14.25	1.76	24.26	13.39	1.96	22.99	13.14	2.17	21.54	12.31	2.39	19.84	11.77	2.66
900	57 (13.8)	23.63	23.63	1.60	22.83	22.83	1.76	21.35	21.35	1.95	20.52	20.34	2.18	19.43	18.63	2.40	18.28	17.04	2.67
	62 (16.6)	23.89	23.83	1.60	22.83	22.83	1.76	21.37	21.36	1.95	20.52	20.34	2.18	19.43	18.63	2.40	18.28	17.04	2.67
	63* (17.2)	24.15	19.03	1.60	23.08	18.50	1.76	21.39	17.45	1.95	20.30	17.28	2.18	19.02	16.41	2.40	17.52	15.88	2.67
	67 (19.4)	25.96	19.82	1.62	24.82	19.27	1.78	22.98	18.18	1.97	21.83	18.00	2.18	20.45	17.09	2.40	18.84	16.55	2.67
	72 (22.2)	28.30	15.85	1.64	27.05	15.23	1.79	25.11	14.31	1.99	23.79	14.04	2.20	22.29	13.16	2.42	20.54	12.57	2.69

See Legend and Notes on page 14.

Manufacturer reserves the right to change, at any time, specifications and designs without notice and without obligations.

Performance Data (cont)

036 Low Cool

EVAPORATOR AIR		CONDENSER ENTERING AIR TEMPERATURES °F (°C)																	
		75 (23.9)			85 (29.4)			95 (35)			105 (40.6)			115 (46.1)			125 (51.7)		
CFM	EWB	Capacity MBtuh		Total Syst KW	Capacity MBtuh		Total Syst KW	Capacity MBtuh		Total Syst KW	Capacity MBtuh		Total Syst KW	Capacity MBtuh		Total Syst KW	Capacity MBtuh		Total Syst KW
		Total	Sens		Total	Sens		Total	Sens		Total	Sens		Total	Sens		Total	Sens	
775	57 (13.8)	25.49	25.49	1.44	23.33	23.33	1.79	21.39	21.39	2.06	19.39	19.39	2.24	17.23	17.23	2.53	15.30	15.30	2.85
	62 (16.6)	26.48	24.78	1.44	23.97	23.33	1.79	22.00	22.00	2.06	19.93	19.93	2.24	17.70	17.70	2.53	15.72	15.72	2.85
	63* (17.2)	27.01	19.99	1.44	24.45	18.66	1.79	22.22	16.19	2.06	19.89	14.66	2.24	17.48	12.38	2.53	15.20	10.85	2.85
	67 (19.4)	29.04	20.83	1.46	26.29	19.44	1.81	23.87	16.86	2.08	21.39	15.27	2.24	18.80	12.89	2.53	16.35	11.31	2.85
	72 (22.2)	31.66	16.66	1.47	28.66	15.36	1.83	26.09	13.27	2.10	23.31	11.91	2.26	20.49	9.93	2.56	17.82	8.48	2.88
900	57 (13.8)	27.16	27.16	1.48	24.86	24.83	1.83	22.79	20.91	2.10	20.66	18.22	2.28	18.35	14.84	2.57	16.30	12.29	2.89
	62 (16.6)	27.46	26.16	1.48	24.86	24.63	1.83	22.81	20.91	2.10	20.66	18.22	2.28	18.35	14.84	2.57	16.30	12.29	2.89
	63* (17.2)	27.76	21.11	1.48	25.13	19.70	1.83	22.84	17.09	2.10	20.44	15.48	2.28	17.97	13.07	2.57	15.62	11.46	2.89
	67 (19.4)	29.85	21.99	1.50	27.02	20.52	1.85	24.53	17.80	2.12	21.98	16.12	2.28	19.32	13.61	2.57	16.80	11.94	2.89
	72 (22.2)	32.53	17.59	1.51	29.45	16.21	1.87	26.81	14.01	2.14	23.96	12.58	2.30	21.06	10.48	2.60	18.31	8.95	2.92
1025	57 (13.8)	28.46	28.46	1.52	26.05	26.05	1.87	23.88	22.63	2.14	21.65	19.71	2.32	19.23	16.05	2.61	17.07	13.30	2.93
	62 (16.6)	28.77	28.61	1.52	26.05	26.05	1.87	23.90	22.63	2.14	21.65	19.71	2.32	19.23	16.05	2.61	17.07	13.30	2.93
	63* (17.2)	29.08	22.84	1.52	26.33	21.31	1.87	23.93	18.49	2.14	21.42	16.75	2.32	18.83	14.14	2.61	16.37	12.40	2.93
	67 (19.4)	31.27	23.79	1.54	28.31	22.20	1.89	25.70	19.26	2.16	23.03	17.45	2.32	20.24	14.73	2.61	17.60	12.91	2.93
	72 (22.2)	34.09	19.03	1.55	30.86	17.54	1.91	28.09	15.16	2.18	25.10	13.61	2.34	22.06	11.34	2.64	19.19	9.69	2.96

See Legend and Notes on page 14.

036 High Cool

EVAPORATOR AIR		CONDENSER ENTERING AIR TEMPERATURES °F (°C)																	
		75 (23.9)			85 (29.4)			95 (35)			105 (40.6)			115 (46.1)			125 (51.7)		
CFM	EWB °F (°C)	Capacity MBtuh		Total Sys KW	Capacity MBtuh		Total Sys KW	Capacity MBtuh		Total Sys KW	Capacity MBtuh		Total Sys KW	Capacity MBtuh		Total Sys KW	Capacity MBtuh		Total Sys KW
		Total	Sens		Total	Sens		Total	Sens		Total	Sens		Total	Sens		Total	Sens	
1050	57 (13.8)	33.53	33.53	2.37	32.37	32.37	2.61	30.83	30.83	2.91	29.02	29.02	3.26	27.43	27.43	3.59	25.76	25.76	4.01
	62 (16.6)	34.83	32.24	2.37	33.26	31.45	2.61	31.72	29.75	2.91	29.81	27.47	3.26	28.19	25.39	3.59	26.46	23.21	4.01
	63* (17.2)	35.52	26.01	2.37	33.92	25.16	2.61	32.03	24.31	2.91	29.76	23.34	3.26	27.84	22.37	3.59	25.60	21.64	4.01
	67 (19.4)	38.19	27.10	2.40	36.47	26.21	2.64	34.41	25.32	2.94	32.00	24.31	3.26	29.94	23.30	3.59	27.53	22.54	4.01
	72 (22.2)	41.63	21.68	2.42	39.76	20.71	2.66	37.61	19.93	2.97	34.88	18.96	3.30	32.63	17.94	3.63	30.00	17.13	4.05
1200	57 (13.8)	35.15	34.91	2.42	33.94	32.95	2.66	32.33	30.91	2.95	30.42	28.54	3.31	28.76	26.38	3.64	27.00	24.12	4.06
	62 (16.6)	35.54	33.50	2.42	33.94	32.68	2.66	32.36	30.91	2.95	30.42	28.54	3.31	28.76	26.38	3.64	27.00	24.12	4.06
	63* (17.2)	35.92	27.03	2.42	34.31	26.14	2.66	32.40	25.26	2.95	30.10	24.25	3.31	28.16	23.24	3.64	25.89	22.48	4.06
	67 (19.4)	38.63	28.15	2.45	36.89	27.23	2.69	34.80	26.31	2.98	32.36	25.26	3.31	30.28	24.21	3.64	27.84	23.42	4.06
	72 (22.2)	42.10	22.52	2.47	40.21	21.51	2.71	38.04	20.71	3.01	35.28	19.70	3.35	33.00	18.64	3.68	30.35	17.80	4.10
1350	57 (13.8)	36.38	36.38	2.47	35.12	35.12	2.71	33.46	33.04	3.00	31.49	30.50	3.36	29.77	28.20	3.69	27.95	25.78	4.11
	62 (16.6)	36.78	36.18	2.47	35.12	34.92	2.71	33.50	33.04	3.00	31.49	30.50	3.36	29.77	28.20	3.69	27.95	25.78	4.11
	63* (17.2)	37.18	28.88	2.47	35.51	27.94	2.71	33.53	26.99	3.00	31.15	25.91	3.36	29.14	24.83	3.69	26.80	24.02	4.11
	67 (19.4)	39.98	30.09	2.49	38.18	29.10	2.73	36.02	28.12	3.03	33.50	26.99	3.36	31.34	25.87	3.69	28.81	25.03	4.11
	72 (22.2)	43.58	24.07	2.52	41.62	22.99	2.76	39.37	22.13	3.06	36.51	21.06	3.39	34.16	19.92	3.72	31.41	19.02	4.15

See Legend and Notes on page 14.

Manufacturer reserves the right to change, at any time, specifications and designs without notice and without obligations.

Performance Data (cont)

048 Low Cool

EVAPORATOR AIR		CONDENSER ENTERING AIR TEMPERATURES °F (°C)																	
		75 (23.9)			85 (29.4)			95 (35)			105 (40.6)			115 (46.1)			125 (51.7)		
CFM	EWB	Capacity MBtuh		Total Syst KW	Capacity MBtuh		Total Syst KW	Capacity MBtuh		Total Syst KW	Capacity MBtuh		Total Syst KW	Capacity MBtuh		Total V KW	Capacity MBtuh		Total Syst KW
		Total	Sens		Total	Sens		Total	Sens		Total	Sens		Total	Sens		Total	Sens	
1050	57	35.30	35.30	1.93	32.30	32.30	2.40	29.61	29.61	2.76	26.85	26.85	3.00	23.85	23.85	3.39	21.18	21.18	3.82
	62	36.67	34.61	1.93	33.19	32.58	2.40	30.46	30.46	2.76	27.59	27.59	3.00	24.51	24.51	3.39	21.76	21.76	3.82
	63	37.40	27.92	1.93	33.85	26.06	2.40	30.76	22.60	2.76	27.54	20.48	3.00	24.21	17.29	3.39	21.05	15.16	3.82
	67	40.21	29.09	1.95	36.40	27.15	2.43	33.04	23.55	2.79	29.61	21.33	3.00	26.03	18.01	3.39	22.63	15.79	3.82
	72	43.83	23.27	1.97	39.68	21.45	2.45	36.12	18.53	2.82	32.28	16.64	3.03	28.37	13.86	3.43	24.67	11.84	3.86
1200	57	37.01	37.01	1.98	33.87	33.87	2.45	31.05	28.74	2.81	28.15	25.04	3.05	25.01	20.39	3.44	22.20	16.90	3.87
	62	37.41	35.96	1.98	33.87	33.85	2.45	31.08	28.74	2.81	28.15	25.04	3.05	25.01	20.39	3.44	22.20	16.90	3.87
	63	37.82	29.01	1.98	34.24	27.08	2.45	31.11	23.48	2.81	27.85	21.27	3.05	24.48	17.96	3.44	21.29	15.75	3.87
	67	40.67	30.22	2.00	36.81	28.20	2.48	33.42	24.46	2.84	29.95	22.16	3.05	26.32	18.71	3.44	22.89	16.40	3.87
	72	44.33	24.18	2.02	40.13	22.28	2.50	36.53	19.25	2.86	32.64	17.29	3.08	28.69	14.40	3.48	24.95	12.30	3.91
1350	57	38.30	38.30	2.03	35.06	35.06	2.50	32.13	30.72	2.85	29.14	26.76	3.10	25.88	21.79	3.49	22.98	18.06	3.92
	62	38.72	38.72	2.03	35.06	35.06	2.50	32.17	30.72	2.85	29.14	26.76	3.10	25.88	21.79	3.49	22.98	18.06	3.92
	63	39.14	31.00	2.03	35.44	28.94	2.50	32.20	25.10	2.85	28.83	22.74	3.10	25.34	19.19	3.49	22.03	16.83	3.92
	67	42.09	32.30	2.05	38.10	30.14	2.52	34.59	26.14	2.88	31.00	23.68	3.10	27.24	19.99	3.49	23.69	17.53	3.92
	72	45.88	25.84	2.07	41.53	23.81	2.55	37.81	20.58	2.91	33.79	18.47	3.13	29.70	15.39	3.52	25.82	13.15	3.96

See Legend and Notes on page 14.

048 High Cool

EVAPORATOR AIR		CONDENSER ENTERING AIR TEMPERATURES °F (°C)																	
		75 (23.9)			85 (29.4)			95 (35)			105 (40.6)			115 (46.1)			125 (51.7)		
CFM	EWB °F (°C)	Capacity MBtuh		Total Sys KW	Capacity MBtuh		Total Sys KW	Capacity MBtuh		Total Sys KW	Capacity MBtuh		Total Sys KW	Capacity MBtuh		Total Sys KW	Capacity MBtuh		Total Sys KW
		Total	Sens		Total	Sens		Total	Sens		Total	Sens		Total	Sens		Total	Sens	
1400	57 (13.8)	44.80	44.80	3.22	43.25	43.25	3.54	41.20	41.20	3.95	38.77	38.77	4.43	36.65	36.65	4.88	34.42	34.42	5.44
	62 (16.6)	46.54	44.19	3.22	44.44	43.11	3.54	42.38	40.78	3.95	39.84	37.65	4.43	37.66	34.80	4.88	35.36	31.82	5.44
	63* (17.2)	47.46	35.65	3.22	45.32	34.49	3.54	42.80	33.32	3.95	39.77	31.99	4.43	37.20	30.65	4.88	34.21	29.65	5.44
	67 (19.4)	51.03	37.14	3.26	48.74	35.92	3.58	45.98	34.71	3.99	42.76	33.32	4.43	40.00	31.93	4.88	36.78	30.89	5.44
	72 (22.2)	55.63	29.71	3.29	53.12	28.38	3.62	50.25	27.31	4.03	46.61	25.99	4.48	43.60	24.59	4.93	40.09	23.48	5.50
1600	57 (13.8)	46.97	46.97	3.29	45.35	45.16	3.61	43.20	42.37	4.01	40.65	39.12	4.50	38.43	36.16	4.94	36.08	33.06	5.51
	62 (16.6)	47.49	45.92	3.29	45.35	44.79	3.61	43.25	42.37	4.01	40.65	39.12	4.50	38.43	36.16	4.94	36.08	33.06	5.51
	63* (17.2)	48.00	37.04	3.29	45.84	35.83	3.61	43.29	34.62	4.01	40.22	33.23	4.50	37.62	31.85	4.94	34.60	30.81	5.51
	67 (19.4)	51.62	38.58	3.32	49.29	37.32	3.65	46.50	36.06	4.05	43.25	34.62	4.50	40.46	33.18	4.94	37.20	32.09	5.51
	72 (22.2)	56.26	30.87	3.35	53.73	29.48	3.68	50.82	28.38	4.09	47.14	27.00	4.54	44.10	25.54	4.99	40.55	24.39	5.56
1800	57 (13.8)	48.61	48.61	3.35	46.93	46.93	3.67	44.71	44.71	4.07	42.07	41.81	4.56	39.78	38.65	5.01	37.35	35.33	5.57
	62 (16.6)	49.15	49.15	3.35	46.93	46.93	3.67	44.76	44.76	4.07	42.07	41.81	4.56	39.78	38.65	5.01	37.35	35.33	5.57
	63* (17.2)	49.68	39.59	3.35	47.44	38.29	3.67	44.81	37.00	4.07	41.63	35.52	4.56	38.94	34.04	5.01	35.81	32.93	5.57
	67 (19.4)	53.42	41.24	3.39	51.02	39.89	3.71	48.13	38.54	4.11	44.76	37.00	4.56	41.87	35.46	5.01	38.50	34.30	5.57
	72 (22.2)	58.23	32.99	3.42	55.61	31.51	3.75	52.60	30.33	4.15	48.79	28.86	4.60	45.64	27.30	5.05	41.97	26.07	5.63

See Legend and Notes on page 14.

Manufacturer reserves the right to change, at any time, specifications and designs without notice and without obligations.

Performance Data (cont)

060 Low Cool

EVAPORATOR AIR		CONDENSER ENTERING AIR TEMPERATURES deg F																	
		75 (23.9)			85 (29.4)			95 (35)			105 (40.6)			115 (46.1)			125 (51.7)		
CFM	EWB	Capacity MBtuh		Total Syst KW	Capacity MBtuh		Total Syst KW	Capacity MBtuh		Total Syst KW	Capacity MBtuh		Total Syst KW	Capacity MBtuh		Total Syst KW	Capacity MBtuh		Total Syst KW
		Total	Sens		Total	Sens		Total	Sens		Total	Sens		Total	Sens		Total	Sens	
1050	57 (13.8)	40.34	40.34	2.28	36.92	36.92	2.83	33.84	33.84	3.25	30.68	30.68	3.53	27.26	26.92	3.99	24.20	23.90	4.49
	62 (16.6)	41.90	37.31	2.28	37.93	35.11	2.83	34.81	34.81	3.25	31.53	30.70	3.53	28.01	26.92	3.99	24.87	23.90	4.49
	63* (17.2)	42.74	30.10	2.28	38.69	28.09	2.83	35.16	24.36	3.25	31.47	22.07	3.53	27.66	18.63	3.99	24.06	16.34	4.49
	67 (19.4)	45.95	31.35	2.30	41.60	29.26	2.86	37.76	25.38	3.28	33.84	22.99	3.53	29.75	19.41	3.99	25.87	17.02	4.49
	72 (22.2)	50.09	25.08	2.33	45.34	23.12	2.89	41.28	19.97	3.31	36.89	17.93	3.56	32.42	14.94	4.03	28.19	12.76	4.54
1200	57 (13.8)	42.29	40.39	2.33	38.71	36.78	2.87	35.48	30.98	3.29	32.17	26.99	3.58	28.58	21.98	4.04	25.38	18.21	4.54
	62 (16.6)	42.76	38.76	2.33	38.71	36.48	2.87	35.52	30.98	3.29	32.17	26.99	3.58	28.58	21.98	4.04	25.38	18.21	4.54
	63* (17.2)	43.22	31.27	2.33	39.13	29.18	2.87	35.56	25.31	3.29	31.83	22.93	3.58	27.98	19.36	4.04	24.33	16.97	4.54
	67 (19.4)	46.48	32.57	2.35	42.07	30.40	2.90	38.19	26.37	3.33	34.23	23.89	3.58	30.08	20.16	4.04	26.16	17.68	4.54
	72 (22.2)	50.66	26.06	2.37	45.86	24.02	2.93	41.75	20.75	3.36	37.31	18.63	3.61	32.79	15.53	4.08	28.51	13.26	4.59
1350	57 (13.8)	43.77	43.16	2.37	40.06	39.31	2.92	36.72	33.11	3.34	33.30	28.85	3.63	29.58	23.49	4.09	26.26	19.46	4.59
	62 (16.6)	44.26	41.86	2.37	40.06	38.99	2.92	36.76	33.11	3.34	33.30	28.85	3.63	29.58	23.49	4.09	26.26	19.46	4.59
	63* (17.2)	44.74	33.42	2.37	40.50	31.19	2.92	36.80	27.05	3.34	32.94	24.51	3.63	28.96	20.69	4.09	25.18	18.14	4.59
	67 (19.4)	48.10	34.81	2.40	43.55	32.49	2.95	39.53	28.18	3.37	35.42	25.53	3.63	31.14	21.55	4.09	27.08	18.90	4.59
	72 (22.2)	52.43	27.85	2.42	47.47	25.67	2.98	43.21	22.18	3.41	38.61	19.91	3.66	33.94	16.59	4.13	29.51	14.17	4.63

See Legend and Notes on page 14.

060 High Cool

EVAPORATOR AIR		CONDENSER ENTERING AIR TEMPERATURES °F (°C)																	
		75 (23.9)			85 (29.4)			95 (35)			105 (40.6)			115 (46.1)			125 (51.7)		
CFM	EWB °F (°C)	Capacity MBtuh		Total Sys KW	Capacity MBtuh		Total Sys KW	Capacity MBtuh		Total Sys KW	Capacity MBtuh		Total Sys KW	Capacity MBtuh		Total Sys KW	Capacity MBtuh		Total Sys KW
		Total	Sens		Total	Sens		Total	Sens		Total	Sens		Total	Sens		Total	Sens	
1600	57 (13.8)	51.83	51.83	3.84	50.94	50.94	4.22	48.99	48.99	4.69	47.09	47.09	5.26	44.59	43.26	5.79	40.92	39.47	6.46
	62 (16.6)	53.92	51.75	3.84	52.43	49.58	4.22	50.47	46.90	4.69	48.46	42.40	5.26	45.89	37.85	5.79	42.12	34.54	6.46
	63* (17.2)	55.03	41.75	3.84	53.50	39.66	4.22	51.00	38.32	4.69	48.40	36.02	5.26	45.34	33.34	5.79	40.76	32.19	6.46
	67 (19.4)	59.17	43.49	3.88	57.52	41.31	4.26	54.78	39.92	4.74	52.04	37.52	5.26	48.76	34.73	5.79	43.83	33.53	6.46
	72 (22.2)	64.49	34.79	3.91	61.53	32.64	4.30	56.35	31.41	4.78	56.73	29.27	5.32	53.15	26.74	5.85	47.77	25.48	6.52
1750	57 (13.8)	55.04	55.04	3.88	54.10	52.07	4.26	52.02	48.86	4.74	50.01	44.17	5.31	47.35	39.43	5.84	43.46	35.98	6.51
	62 (16.6)	55.64	53.91	3.88	54.10	51.64	4.26	52.08	48.86	4.74	50.01	44.17	5.31	47.35	39.43	5.84	43.46	35.98	6.51
	63* (17.2)	56.25	43.49	3.88	54.68	41.31	4.26	52.14	39.92	4.74	49.48	37.52	5.31	46.35	34.73	5.84	41.66	33.53	6.51
	67 (19.4)	60.48	45.30	3.92	58.80	43.04	4.31	56.00	41.58	4.79	53.20	39.09	5.31	49.84	36.17	5.84	44.80	34.93	6.51
	72 (22.2)	65.92	36.24	3.96	64.09	34.00	4.35	61.21	32.72	4.83	57.99	30.49	5.36	54.33	27.85	5.90	48.83	26.54	6.57
2000	57 (13.8)	56.61	56.61	3.96	55.64	55.64	4.34	53.51	53.04	4.82	51.44	47.95	5.39	48.70	42.81	5.92	44.70	39.06	6.59
	62 (16.6)	57.23	57.23	3.96	55.64	55.64	4.34	53.57	53.04	4.82	51.44	47.95	5.39	48.70	42.81	5.92	44.70	39.06	6.59
	63* (17.2)	57.85	47.22	3.96	56.25	44.86	4.34	53.63	43.34	4.82	50.89	40.74	5.39	47.68	37.70	5.92	42.85	36.40	6.59
	67 (19.4)	62.21	49.18	4.00	60.48	46.72	4.39	57.60	45.14	4.87	54.72	42.44	5.39	51.26	39.28	5.92	46.08	37.92	6.59
	72 (22.2)	67.81	39.35	4.04	65.92	36.91	4.43	62.96	35.53	4.91	59.64	33.10	5.44	55.88	30.24	5.98	50.23	28.82	6.65

See Legend and Notes on page 14.

Manufacturer reserves the right to change, at any time, specifications and designs without notice and without obligations.

Performance Data (cont)

* At 75°F (24°C) entering dry bulb-Tennessee Valley Authority (TVA) rating conditions; all others at 80°F (27°C) dry bulb.
LEGEND
BF— Bypass Factor
edb— Entering Dry-Bulb
Ewb— Entering Wet-Bulb
kW — Total Unit Power Input
SHC— Sensible Heat Capacity (1000 Btuh)
TC — Total Capacity (1000 Btuh) (net)
rh—Relative Humidity
COOLING NOTES:
1. Ratings are net; they account for the effects of the evaporator-fan motor power and heat.
2. Direct interpolation is permissible. Do not extrapolate.
3. The following formulas may be used:

$$^{t}ldb = {}^{t}edb - \frac{\text{Sensible capacity (Btuh)}}{1.10 \times \text{CFM}}$$

$$^{t}lwb = \text{Wet-bulb temperature corresponding to enthalpy air leaving evaporator coil } ({}^{h}lwb)$$

$$^{h}lwb = {}^{h}ewb - \frac{\text{total capacity (Btuh)}}{(4.5 \times \text{CFM})}$$

Where: ^{h}ewb = Enthalpy of air entering evaporator coil

4. The SHC is based on 80° F (26.6°C) edb temperature of air entering evaporator coil. Below 80°F (26.6°C) edb, subtract (corr factor x cfm) from SHC. Above 80° F (26.6°C) edb, add (corr factor x cfm) to SHC.
Correction Factor = 1.10 x (1 + BF) x (edb - 80).
5. Integrated capacity is maximum (instantaneous) capacity less the effect of frost on the outdoor coil and the heat required to defrost it.

Multiplication Factors

HEATER kW RATING	VOLTAGE DISTRIBUTION V/3/60	MULTIPLICATION FACTOR
240	200	0.69
	208	0.75
	230	0.92
	240	1.00

Dry Coil Air Delivery* - Horizontal and Downflow Discharge 208/230V Models Sizes 24-60

Unit Size	Motor Speed	Tap		ESP (in. W.C.)									
				0.1	0.2	0.3	0.4	0.5	0.6	0.7	0.8	0.9	1.0
24	Low	Blue	CFM	747	663	575	473	370	289	179	NA	NA	NA
			BHP	0.10	0.11	0.11	0.12	0.12	0.13	0.13	NA	NA	NA
	Med-Low†	Pink	CFM	805	721	641	565	471	383	274	146	NA	NA
			BHP	0.11	0.12	0.13	0.13	0.13	0.14	0.14	0.15	NA	NA
	Medium**	Red	CFM	1094	1035	975	913	851	785	713	638	566	472
			BHP	0.24	0.25	0.25	0.26	0.27	0.27	0.28	0.28	0.29	0.29
	Med-High	Orange	CFM	1180	1118	1059	1002	943	885	827	766	707	643
			BHP	0.27	0.28	0.29	0.30	0.30	0.31	0.32	0.32	0.33	0.34
	High	Black	CFM	1369	1308	1255	1204	1152	1105	1052	999	909	806
			BHP	0.40	0.41	0.41	0.42	0.43	0.44	0.45	0.46	0.44	0.42
36	Low†	Blue	CFM	1028	964	901	838	774	711	647	588	532	484
			BHP	0.12	0.13	0.14	0.15	0.15	0.16	0.17	0.18	0.19	0.19
	Med-Low	Pink	CFM	1164	1107	1051	995	939	882	824	767	711	656
			BHP	0.16	0.17	0.18	0.19	0.20	0.21	0.22	0.22	0.23	0.24
	Medium	Red	CFM	1391	1340	1294	1247	1199	1151	1104	1054	1003	946
			BHP	0.25	0.26	0.27	0.28	0.29	0.30	0.31	0.32	0.33	0.34
	Med-High**	Orange	CFM	1423	1377	1331	1288	1240	1192	1147	1097	1047	998
			BHP	0.26	0.27	0.28	0.29	0.30	0.32	0.33	0.34	0.35	0.36
	High	Black	CFM	1511	1466	1420	1378	1338	1293	1245	1200	1156	1109
			BHP	0.30	0.31	0.33	0.34	0.35	0.36	0.37	0.38	0.39	0.40
48	Low	Blue	CFM	945	885	820	757	696	638	579	527	480	429
			BHP	0.11	0.12	0.12	0.13	0.14	0.15	0.16	0.16	0.17	0.18
	Med-Low†	Pink	CFM	1297	1253	1207	1163	1115	1066	1018	974	931	888
			BHP	0.23	0.24	0.24	0.26	0.27	0.27	0.28	0.29	0.30	0.31
	Medium**	Red	CFM	1799	1759	1725	1676	1625	1584	1546	1509	1473	1437
			BHP	0.50	0.51	0.52	0.54	0.55	0.57	0.58	0.59	0.61	0.62
	Med-High	Orange	CFM	1936	1901	1864	1831	1798	1767	1736	1702	1670	1633
			BHP	0.63	0.64	0.65	0.66	0.68	0.69	0.70	0.71	0.73	0.74
	High	Black	CFM	1966	1933	1903	1872	1842	1811	1782	1751	1718	1619
			BHP	0.67	0.68	0.70	0.71	0.73	0.74	0.75	0.77	0.78	0.74
60	Low†	Blue	CFM	945	885	820	757	696	638	579	527	480	429
			BHP	0.11	0.12	0.12	0.13	0.14	0.15	0.16	0.16	0.17	0.18
	Med-Low†	Pink	CFM	1297	1253	1207	1163	1115	1066	1018	974	931	888
			BHP	0.23	0.24	0.24	0.26	0.27	0.27	0.28	0.29	0.30	0.31
	Medium	Red	CFM	1683	1648	1615	1579	1536	1497	1462	1427	1393	1355
			BHP	0.45	0.46	0.47	0.49	0.50	0.51	0.52	0.53	0.54	0.55
	Med-High**	Orange	CFM	1943	1905	1867	1818	1787	1743	1705	1664	1624	1587
			BHP	0.63	0.64	0.66	0.67	0.68	0.69	0.70	0.71	0.73	0.74
	High	Black	CFM	1966	1933	1903	1872	1842	1811	1782	1751	1718	1619
			BHP	0.67	0.68	0.70	0.71	0.73	0.74	0.75	0.77	0.78	0.74

Shaded areas indicate acceptable Dehum. Speeds (Dehum. Mode is High Stage Only, 208/230 VAC Models Only).

* Air delivery values are without air filter and are for dry coil (See Wet Coil Pressure Drop table).

†Factory-shipped low stage cooling speed.

**Factory-shipped high stage cooling speed.

NA - Not Allowed for particular heating speed.

Note: Deduct field-supplied air filter pressure drop and wet coil pressure drop to obtain external static pressure available for ducting.

Wet Coil Pressure Drop (IN. W.C.)

Unit Size	Standard CFM (SCFM)																	
	500	600	700	800	900	1000	1100	1200	1300	1400	1500	1600	1700	1800	1900	2000	2100	2200
24	0.02	0.03	0.04	0.04	0.05	0.06												
36				0.03	0.04	0.05	0.05	0.06	0.07	0.08	0.08	0.09	0.10	0.11				
48						0.03	0.04	0.04	0.05	0.06	0.06	0.07	0.08	0.09	0.10	0.11	0.12	0.12
60						0.03	0.04	0.04	0.05	0.06	0.06	0.07	0.08	0.09	0.10	0.11	0.12	0.12

Economizer with 1-in. Filter Pressure Drop (IN. W.C.)

Filter Size in. (mm)	Cooling Tons	Standard CFM (SCFM)																	
		500	600	700	800	900	1000	1100	1200	1300	1400	1500	1600	1700	1800	1900	2000	2100	2200
600-1400 CFM 12x20x1+12x20x1 (305x508x25+305x508x25)	2.0	0.04	0.05	0.07	0.09	0.14	0.16	0.18	0.25	-	-	-	-	-	-	-	-	-	-
1200-1800 CFM 16x24x1+14x24x1 (406x610x25+356x610x25)	3.0	-	-	-	0.04	0.06	0.07	0.08	0.10	0.11	0.12	0.13	0.14	0.16	0.16	-	-	-	-
1500-2200 CFM 16x24x1+18x24x1 (406x610x25+457x610x25)	4.0	-	-	-	-	-	-	0.08	0.10	0.11	0.13	0.15	0.17	0.18	0.20	0.21	0.22	-	-
1500-2200 CFM 16x24x1+18x24x1 (406x610x25+457x610x25)	5.0	-	-	-	-	-	-	0.08	0.10	0.11	0.13	0.15	0.17	0.18	0.20	0.21	0.22	0.23	0.23

Filter Pressure Drop Table (IN. W.C.)

Filter Size in. (mm)	Cooling Tons	Standard CFM (SCFM)																	
		500	600	700	800	900	1000	1100	1200	1300	1400	1500	1600	1700	1800	1900	2000	2100	2200
600-1400 CFM 12x20x1+12x20x1 (305x508x25+305x508x25)	2.0	0.02	0.03	0.05	0.06	0.08	0.10	0.11	0.13	-	-	-	-	-	-	-	-	-	-
1200-1800 CFM 16x24x1+14x24x1 (406x610x25+356x610x25)	3.0	-	-	-	0.03	0.03	0.04	0.05	0.06	0.07	0.08	0.09	0.09	0.10	0.11	-	-	-	-
1500-2200 CFM 16x24x1+18x24x1 (406x610x25+457x610x25)	4.0	-	-	-	-	-	-	0.02	0.03	0.03	0.04	0.04	0.06	0.08	0.10	0.11	0.13	-	-
1500-2200 CFM 16x24x1+18x24x1 (406x610x25+457x610x25)	5.0	-	-	-	-	-	-	0.02	0.03	0.03	0.04	0.04	0.06	0.08	0.10	0.11	0.13	0.14	0.15

Manufacturer reserves the right to change, at any time, specifications and designs without notice and without obligations.

Electric Heat Pressure Drop Tables (IN. W.C.)

Small Cabinet: 24

STATIC	CFM											
	500	600	700	800	900	1000	1100	1200	1300	1400	1500	1600
5 kW	0.00	0.00	0.00	0.00	0.00	0.00	0.00	0.00	0.02	0.04	0.06	0.07
10 kW	0.00	0.00	0.00	0.00	0.00	0.02	0.04	0.06	0.07	0.09	0.10	0.11
15 kW	0.00	0.00	0.00	0.02	0.04	0.06	0.08	0.10	0.12	0.14	0.16	0.18
20 kW	0.00	0.00	0.02	0.04	0.06	0.08	0.09	0.11	0.13	0.15	0.17	0.19

Large Cabinet: 36-60

STATIC	CFM														
	1100	1200	1300	1400	1500	1600	1700	1800	1900	2000	2100	2200	2300	2400	2500
5 kW	0.00	0.00	0.00	0.01	0.02	0.03	0.04	0.05	0.06	0.07	0.08	0.09	0.10	0.11	0.12
10 kW	0.00	0.00	0.01	0.02	0.03	0.04	0.05	0.06	0.07	0.08	0.09	0.10	0.11	0.12	0.13
15 kW	0.00	0.02	0.03	0.04	0.05	0.06	0.07	0.08	0.09	0.10	0.11	0.12	0.13	0.14	0.15
20 kW	0.02	0.03	0.04	0.05	0.06	0.07	0.08	0.09	0.10	0.11	0.12	0.13	0.14	0.15	0.16

*Refer to Price Page for application detail.
Contact MicroMetl Customer Service at 1-800-662-4822 to order.
NOTE: If installing an accessory heater, the thermostat must have capablility to energize “G” (fan) on a call for “W” (strip heat).

Minimum Airflow for Safe Electric Heater Operation (CFM)

SIZE	24	30	36	42	48	60
Cfm	800	1000	1200	1400	1600	1750

Typical Piping and Wiring

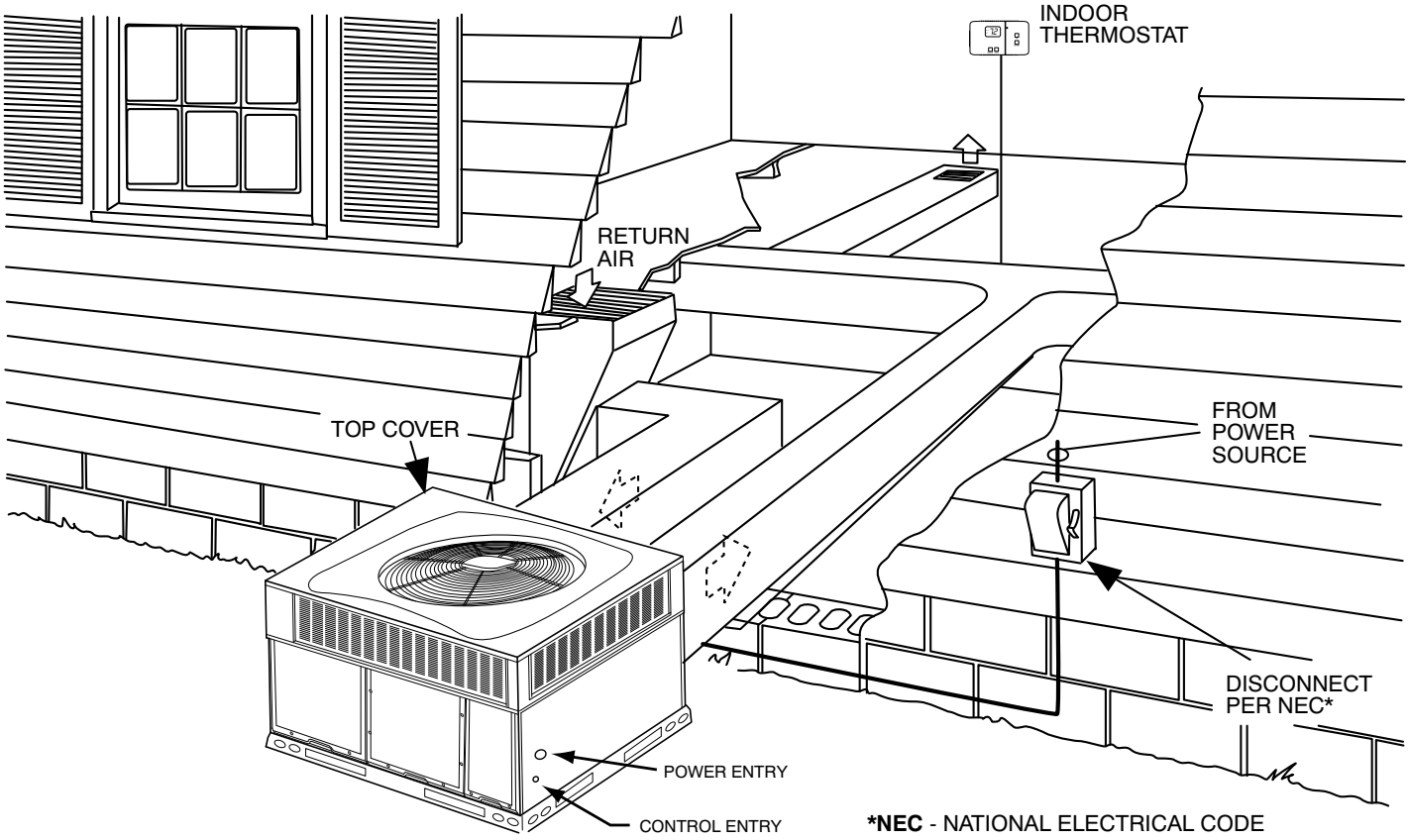

A09238

Application Data

Condensate trap — A 2-in. (50.8 mm) condensate trap must be field supplied.

Ductwork — Secure downflow discharge ductwork to roof curb. For horizontal discharge applications, attach ductwork to unit with flanges.

To convert a unit to downflow discharge — Units are equipped with factory-installed inserts in the downflow openings. Removal of the inserts is similar to removing an electrical knock-out.

Maximum cooling airflow — To minimize the possibility of condensate blow-off from the evaporator, airflow through the units should not exceed 450 cfm per ton.

Minimum cooling airflow — Minimum cooling airflow is 350 cfm per ton.

Minimum ambient cooling operation temperature — All standard units have a minimum ambient operating temperature of 40°F (4°C). With accessory low ambient temperature kit, units can operate at temperatures down to 0°F (-17°C).

Electrical Data

MODEL	NOMINAL V-PH-HZ	VOLTAGE RANGE		COMPRESSOR		OFM	IFM	NOMINAL ELECTRIC HEAT	POWER SUPPLY		
		MIN	MAX	RLA	LRA	FLA	FLA	kW	FLA	MCA	MOCP
24	208/230-1-60	197	253	10.9	61	0.6	3.9	-/-	-/-	18.1	25
								3.8/5	18.1/20.8	27.5/30.9	30/35
								5.4/7.2	25.9/30	37.3/42.4	40/45
								7.5/10	36.1/41.7	50/57	50/60
36	208/230-1-60	197	253	15.3	83	1.05	6.1	-/-	-/-	26.3	40
								3.8/5	18.1/20.8	30.3/33.6	40/40
								5.4/7.2	25.9/30	40/45.1	40/50
								7.5/10	36.1/41.7	52.8/59.8	60/60
								11.3/15	54.2/62.5	75.4/85.8	80/90
	208/230-3-60	197	253	11.6	73	1.05	6.1	-/-	-/-	21.7	30
								3.8/5	10.4/12	21.7/22.6	30/30
								5.4/7.2	20.8/24.1	33.6/37.8	35/40
								11.3/15	31.2/36.1	46.6/52.8	50/60
48	208/230-1-60	197	253	21.2	104	1.05	7.6	-/-	-/-	35.2	50
								3.8/5	18.1/20.8	35.2/35.5	50/50
								5.4/7.2	25.9/30	41.9/47	50/50
								7.5/10	36.1/41.7	54.6/61.6	60/70
								11.3/15	54.2/62.5	77.3/87.6	80/90
								15/20	72.2/83.3	99.8/113.6	100/125
	208/230-3-60	197	253	14	83.1	1.05	7.6	-/-	-/-	26.2	40
								3.8/5	10.4/12	26.2/26.2	40/40
								5.4/7.2	20.8/24.1	35.5/39.6	40/40
								11.3/15	31.2/36.1	48.5/54.6	50/60
								15/20	41.4/47.9	61.3/69.4	70/70
60	208/230-1-60	197	253	28.8	152.9	1.05	7.6	-/-	-/-	44.7	60
								3.8/5	18.1/20.8	44.7/44.7	60/60
								5.4/7.2	25.9/30	44.7/47	60/60
								7.5/10	36.1/41.7	54.6/61.6	60/70
								11.3/15	54.2/62.5	77.3/87.6	80/90
								15/20	72.2/83.3	99.8/113.6	100/125
	208/230-3-60	197	253	16.2	110	1.05	7.6	-/-	-/-	29	40
								3.8/5	10.4/12	29/29	40/40
								5.4/7.2	20.8/24.1	35.5/39.5	40/40
								11.3/15	31.2/36.1	48.5/54.6	50/60
								15/20	41.4/47.9	61.3/69.4	70/70

LEGEND

FLA - Full Load Amps
IDM - Inducer Motor
IFM - Indoor Fan Motor
LRA -Locked Rotor Amps
MCA - Minimum Circuit Amps
MOCP - Maximum Over Current Protection
OFM - Outdoor Fan Motor
RLA - Rated Load Amps

NOTES:

1. In compliance with NEC (National Electrical Code) requirements for multimotor and combination load equipment (refer to NEC Articles 430 and 440), the overcurrent protective device for the unit shall be Power Supply fuse or circuit breaker.
2. Minimum wire size is based on 60 C copper wire. If other than 60 C wire is used, or if length exceeds wire length in table, determine size from NEC.
3. Unbalanced 3-Phase Supply Voltage
   Never operate a motor where a phase imbalance in supply voltage is greater than 2%. Use the following formula to determine the percentage of voltage imbalance

   % Voltage imbalance

   $$= 100 \times \frac{\text{max voltage deviation from average voltage}}{\text{average voltage}}$$

EXAMPLE: Supply voltage is 230-3-60.

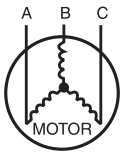

AB = 228 v
BC = 231 v
AC = 227 v

$$\text{Average Voltage} = \frac{228 + 231 + 227}{3} = \frac{686}{3} = 229$$

Determine maximum deviation from average voltage.
(AB) 229 - 228 = 1 v
(BC) 231 - 229 = 2 v
(AC) 229 - 227 = 2 v

Maximum deviation is 2 v.

Determine percent of voltage imbalance

$$\% \text{ Voltage Imbalance} = 100 \times \frac{2}{229} = 0.8\%$$

This amount of phase imbalance is satisfactory as it is below the maximum allowable 2%.

IMPORTANT: If the supply voltage phase imbalance is more than 2%, contact your local electric utility company immediately.

A06564

Connection Wiring Schematic 208/230-1-60

CONNECTION WIRING DIAGRAM

DANGER: ELECTRICAL SHOCK HAZARD DISCONNECT POWER BEFORE SERVICING

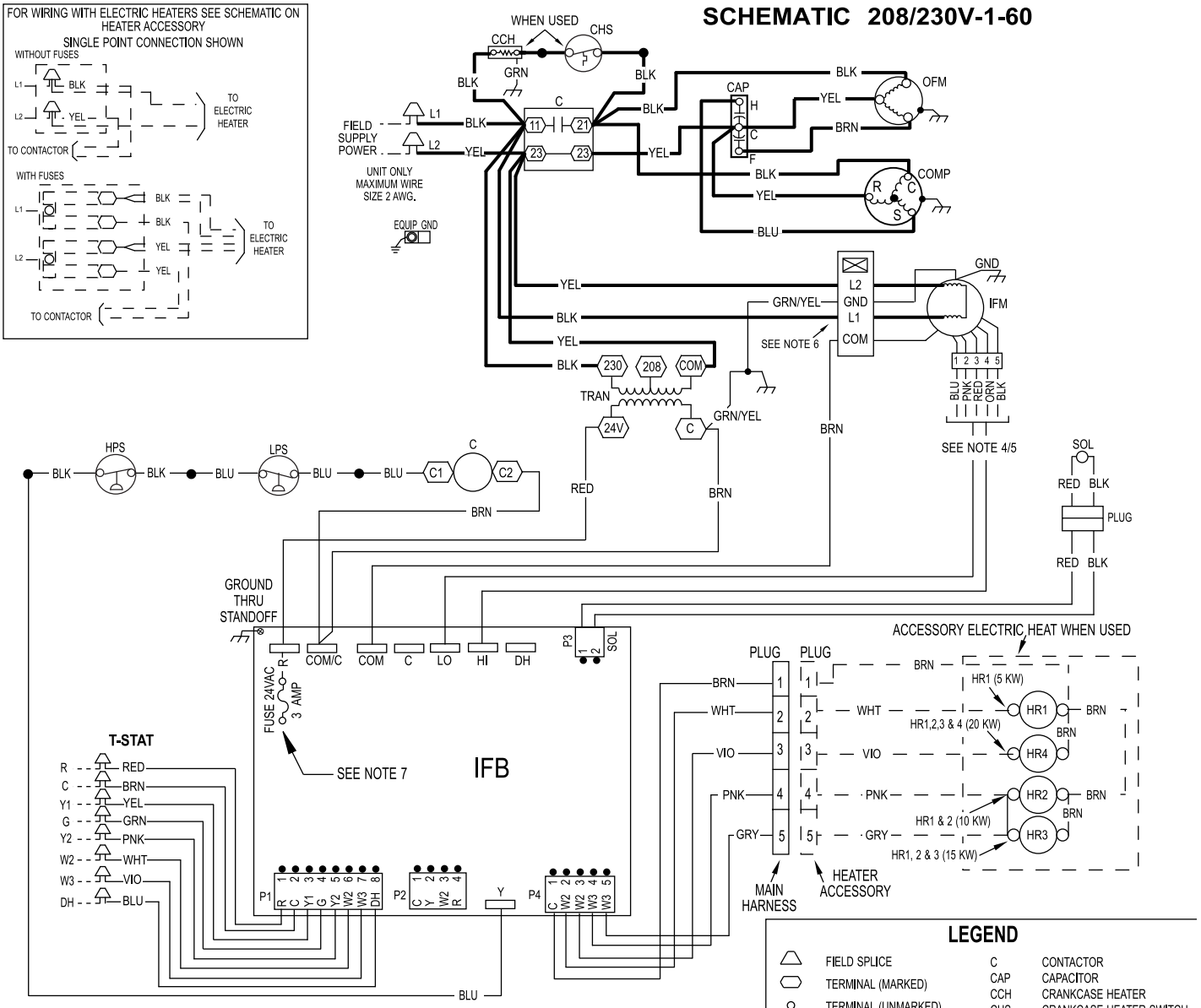

LEGEND

△	FIELD SPLICE	C	CONTACTOR
⬡	TERMINAL (MARKED)	CAP	CAPACITOR
○	TERMINAL (UNMARKED)	CCH	CRANKCASE HEATER
●	SPLICE	CHS	CRANKCASE HEATER SWITCH
⬡•	SPLICE (MARKED)	COMP	COMPRESSOR MOTOR
——	FACTORY LO VOLTAGE	CTD	COMPRESSOR TIME DELAY
– –	FIELD CONTROL WIRING	DH	DEHUM
—·—	FIELD POWER WIRING	GND	GROUND
– · –	ACCESSORY OR OPTIONAL WIRING	HPS	HIGH PRESSURE SWITCH
▬	FACTORY HI VOLTAGE	HR	HEATER RELAY
		IFB	INDOOR FAN BOARD
		IFM	INDOOR FAN MOTOR
		LPS	LOW PRESSURE SWITCH
		OFM	OUTDOOR FAN MOTOR
		SOL	COMPRESSOR SOLENOID
		TRAN	TRANSFORMER
		T-STAT	THERMOSTAT

NOTES:

1. IF ANY OF THE ORIGINAL WIRES FURNISHED ARE REPLACED IT MUST BE REPLACED WITH THE SAME OR IT'S EQUIVALENT.
2. SEE PRE SALE LITERATURE FOR THERMOSTATS.
3. USE 75 DEGREES C COPPER CONDUCTORS FOR FIELD INSTALLATION.
4. REFER TO INSTALLATION INSTRUCTIONS FOR CORRECT SPEED SELECTION FOR IFM.
5. RELOCATION OF SPEED TAPS MAY BE REQUIRED WHEN USING FIELD INSTALLED ELECTRIC HEATERS. CONSULT INSTALLATION INSTRUCTIONS TO DETERMINE CORRECT SPEED TAP SETTING.
6. "DO NOT DISCONNECT PLUG UNDER LOAD".
7. THIS FUSE IS MANUFACTURED BY LITTLE FUSE, P/N 287003.

A12572

Ladder Wiring Diagram 208/230-1-60

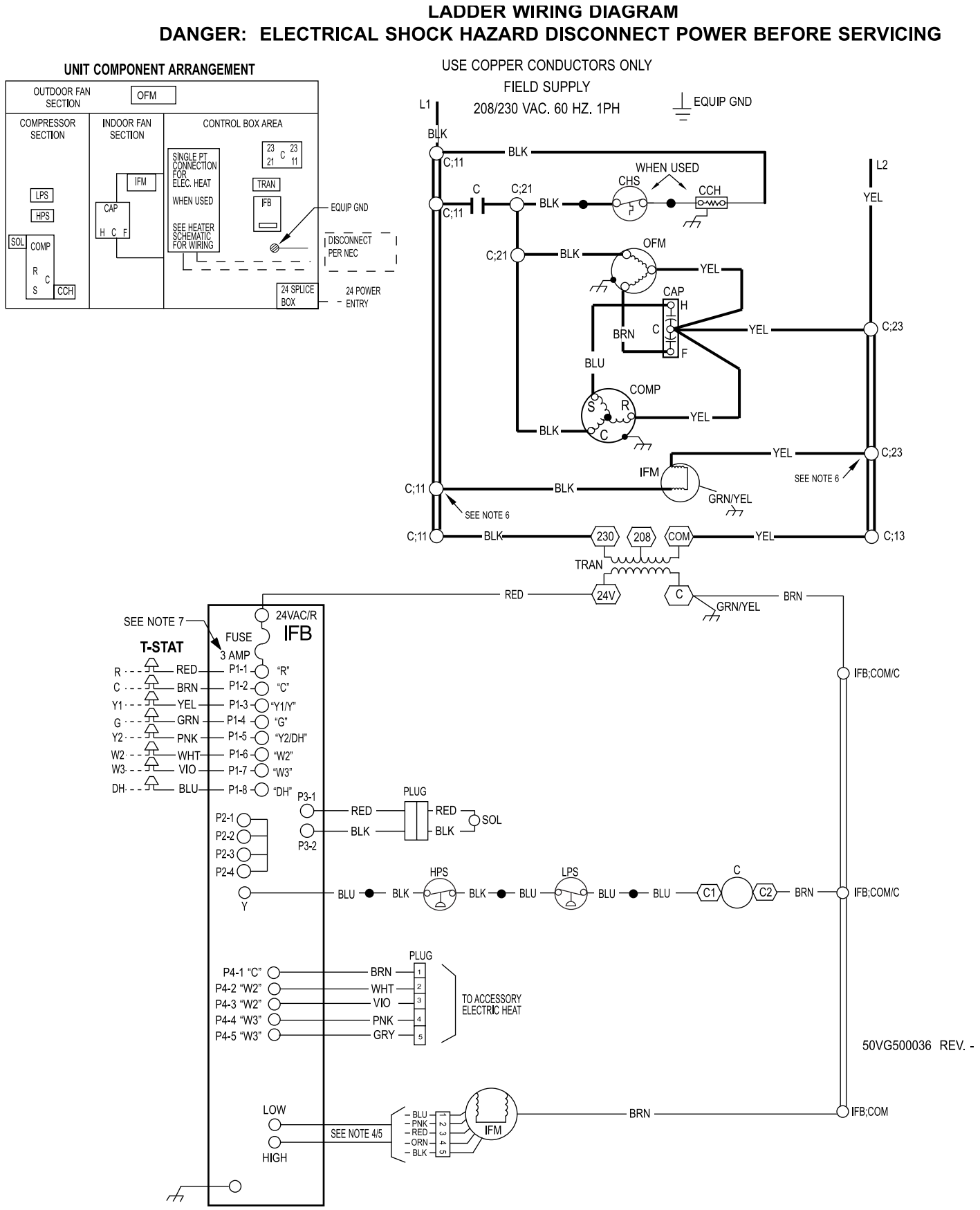

Connection Wiring Diagram 208/230-3-60

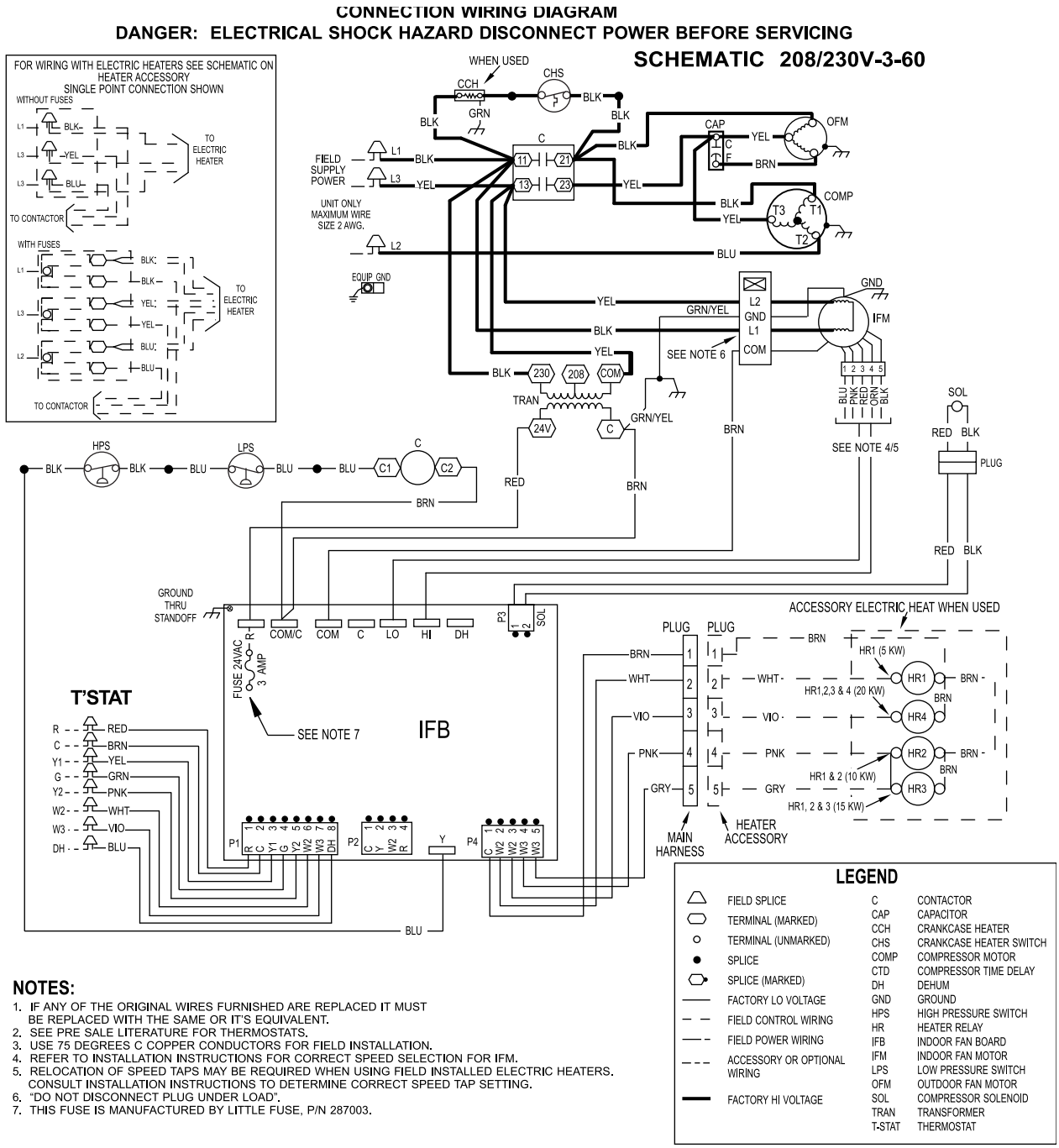

NOTES:

1. IF ANY OF THE ORIGINAL WIRES FURNISHED ARE REPLACED IT MUST BE REPLACED WITH THE SAME OR IT'S EQUIVALENT.
2. SEE PRE SALE LITERATURE FOR THERMOSTATS.
3. USE 75 DEGREES C COPPER CONDUCTORS FOR FIELD INSTALLATION.
4. REFER TO INSTALLATION INSTRUCTIONS FOR CORRECT SPEED SELECTION FOR IFM.
5. RELOCATION OF SPEED TAPS MAY BE REQUIRED WHEN USING FIELD INSTALLED ELECTRIC HEATERS. CONSULT INSTALLATION INSTRUCTIONS TO DETERMINE CORRECT SPEED TAP SETTING.
6. "DO NOT DISCONNECT PLUG UNDER LOAD".
7. THIS FUSE IS MANUFACTURED BY LITTLE FUSE, P/N 287003.

Ladder Wiring Diagram 208/230-3-60

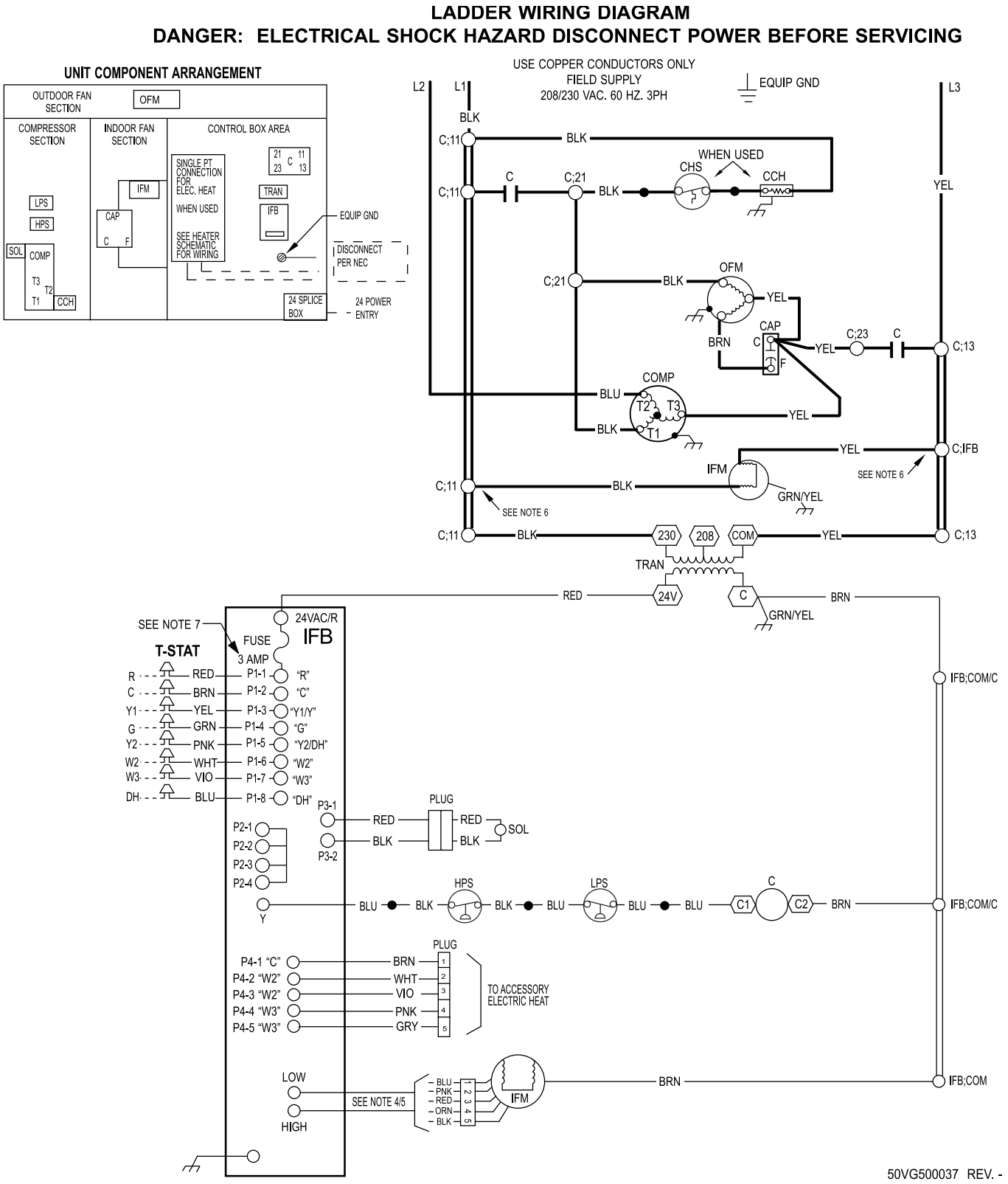

A12575

Controls

Cooling Sequence of Operation

1. Continuous Fan
   a. Thermostat closes circuit R to G energizing the blower motor for continuous fan. The indoor fan is energized on low speed.
2. Cooling Mode
   a. Low Stage: Thermostat closes R to G, R to Y1. The compressor and indoor fan are energized on low speed. The outdoor fan is also energized
   b. High Stage: Thermostat closes R to G, R to Y1, R to Y2. The compressor and indoor fan are energized on high speed. The outdoor fan is also energized.
3. Electric Heating Mode
   a. Thermostat closes circuit R to W2 or W3, and R to G. There are no on or off delays.

NOTE: On units with a compressor delay device: Once the compressor has started and then stopped, it cannot be restarted again until 5 minutes have elapsed.

Guide Specifications

Packaged Air Conditioner System
Constant Volume Application
HVAC Guide Specifications

Size Range: **2 to 5 Tons, Nominal Cooling**

Part 1 — General

SYSTEM DESCRIPTION

Outdoor rooftop mounted or ground mounted, electric cooling unit utilizing a hermetic 2-stage scroll compressor for cooling duty. Unit shall discharge supply air vertically or horizontally as shown on contract drawings. Condenser fan/coil section shall have a draw-thru design with vertical discharge for minimum sound levels.

QUALITY ASSURANCE

- Unit shall be rated in accordance with AHRI Standards 210/240 and 270.
- Unit shall be designed in accordance with UL Standard 1995.
- Unit shall be manufactured in a facility registered to ISO 9001 manufacturing quality standard.
- Unit shall be UL listed and c-UL certified as a total package for safety requirements.
- Roof curb shall be designed to conform to NRCA Standards.
- Insulation and adhesives shall meet NFPA 90A requirements for flame spread and smoke generation.
- Cabinet insulation shall meet ASHRAE Standard 62P.

DELIVERY, STORAGE AND HANDLING

Unit shall be stored and handled per manufacturer's recommendations.

Part 2 — Products

EQUIPMENT

1. General:
   Factory-assembled, single-piece, heating and cooling unit. Contained within the enclosure shall be all factory wiring, piping, controls, refrigerant charge with R-410A refrigerant, and special features required prior to field start-up.
2. Unit Cabinet:
   a. Unit cabinet shall be constructed of phosphated, zinc-coated, pre-painted steel capable of with-standing 500 hours in salt spray.
   b. Normal service shall be through a single removable cabinet panel.
   c. The unit shall be constructed on a rust proof unit base that has an externally trapped, integrated sloped drain.
   d. Evaporator fan compartment top surface shall be insulated with a minimum 1/2-in. (12.7 mm) thick, flexible fiberglass insulation, coated on the air side and retained by adhesive and mechanical means. The evaporator wall sections will be insulated with a minimum semi-rigid foil-faced board capable of being wiped clean. Aluminum foil-faced fiberglass insulation shall be used in the entire indoor air cavity section.
   e. Unit shall have a field-supplied condensate trap.
3. Fans:
   a. The evaporator fan shall be a multi-speed ECM Blower Motor.
   b. Fan wheel shall be made from steel, be double-inlet type with forward curved blades with corrosion resistant finish. Fan wheel shall be dynamically balanced.
   c. Condenser fan shall be direct drive propeller type with aluminum blades riveted to corrosion resistant steel spiders, be dynamically balanced, and discharge air vertically.
4. Compressor:
   a. Fully hermetic compressors with factory-installed vibration isolation.
   b. 2-Stage scroll compressor shall be standard on all units.
5. Coils:
   Tin plated copper tubes on indoor coil. Copper tubes on outdoor coil.
6. Refrigerant Components:
   Refrigerant expansion device shall be of the TXV (thermostatic expansion valve) type.
7. Filters:
   Filter section shall consist of field-installed, throwaway, 1-in. (25 mm) thick fiberglass filters of commercially available sizes.
8. Controls and Safeties:
   a. Unit controls shall be complete with a self-contained low voltage control circuit.
   b. Compressors shall incorporate a solid-state compressor protector that provides reset capability.
9. Operating Characteristics:
   a. Unit shall be capable of starting and running at 125°F (51°C) ambient outdoor temperature per maximum load criteria of AHRI Standard 210.
   b. Compressor with standard controls shall be capable of operation down to 40°F (4°C) ambient outdoor temperature.
   c. Units shall be provided with fan time delay to prevent cold air delivery before the heat exchanger warms up.
   d. Unit shall be provided with 90-second fan time delay after the thermostat is satisfied.
10. Electrical Requirements:
    All unit power wiring shall enter the unit cabinet at a single location.
11. Motors:
    a. Compressor motors shall be of the refrigerant-cooled type with line-break thermal and current overload protection.
    b. All fan motors shall have permanently lubricated bearings, and inherent, automatic reset, thermal overload protection.
12. Special Options/Kits Available:
    a. Coil Options:
       Base unit with tin plated indoor coil hairpins.
    b. Compressor Start Kit (single phase units only):
       Shall provide additional starting torque for single-phase compressors.
    c. Corporate Thermostat:
       To provide for one-stage heating and cooling in addition manual or automatic changeover and indoor fan control.
    d. Crankcase Heater Kit:
       Shall provide anti-floodback protection for low-load cooling applications.
    e. Economizer for 2-stage operation:
       (Horizontal and Vertical with Jade Honeywell W7220 controller, Honeywell communicating actuator, and dry bulb sensor. (Contact MicroMetl Customer Service at 1-800-662-4822 to order.)

NOTE: The enhanced dehumidification feature on high stage cooling does not support use of an economizer.

(1.) Economizer controls capable of providing free cooling using outside air.
(2.) Equipped with low leakage dampers not to exceed 3% leakage, at 1.0 IN. W.C. pressure differential.
(3.) Spring return motor shuts off outdoor damper on power failure.

Guide Specifications (cont)

f. Electric Heaters:
   (1.) Electric heater shall be available as a field-installed option.
   (2.) Heater elements shall be open wire type, adequately supported and insulated with ceramic bushings.
   (3.) Electric heater packages must provide single point power connection capability.

g. Filter Rack Option or Kit:
   Shall provide filter mounting for downflow applications. Offered as an accessory.

h. Flat Roof Curb Kit:
   Curbs shall have seal strip and a wood nailer for flashing and shall be installed per manufacturer's instructions.

i. Low Ambient Package Kit:
   Shall consist of a solid-state control and condenser coil temperature sensor for controlling condenser-fan motor operation, which shall allow unit to operate down to 0°F (-17.7°C) outdoor ambient temperature when properly installed.

j. Manual Outdoor Air Damper Kit:
   Package shall consist of damper, birdscreen, and rainhood which can be preset to admit outdoor air for year-round ventilation.

k. Square-To-Round Duct Transitions Kit (24-48 size):
   Shall have the ability to convert the supply and return openings from rectangular to round.

l. Cabinet air leakage of 2.0% or less at .5 in. W.C. when tested in accordance with ASHRAE standard 193. Available as a factory installed option.

m. Dual Point Electric Heaters Kit
   Allows you to power the electric heater and unit contactor separately by having two individual field power supply circuits connected respectively.

© 2023 Carrier. All rights reserved.

Manufacturer reserves the right to change, at any time, specifications and designs without notice and without obligations.