F96VTN
Two-Stage, Variable Speed, Non-Communicating, 4-Way Multipoise, 35-in. (889 mm) Tall Condensing Gas Furnace

Arcoaire® Air Conditioning & Heating

Product Specifications

A200418

Illustrations and photographs are only representative. Some product models may vary.

⚠ WARNING

CARBON MONOXIDE POISONING AND FIRE HAZARD

Failure to follow this warning could result in personal injury, death, and/or property damage.

This furnace is not designed for use in recreation vehicles, manufactured (mobile) homes or outdoors.

Failure to follow this warning could result in personal injury, death, and/or property damage.

Use of the AHRI Certified TM Mark indicates a manufacturer's participation in the program. For verification of certification for individual products, go to www.ahridirectory.org .

ISO 9001 Quality

A200326

EASIER TO SELL

- Up to 96% AFUE in upflow and horizontal positions 95% AFUE in downflow position
- Two-stage heating operation
- Variable-speed, constant torque ECM blower for extra SEER boost with select cooling equipment
- Supports single-stage and two-stage cooling units
- Dehumidification feature in cooling
- NOx emissions less than 40ng/J; can be installed in air quality management districts with a 40 ng/J NOx emissions requirement.
- Cabinet air leakage less than 2.0% at 1.0 in. W.C. and cabinet air leakage less than 1.4% at 0.5 in. W.C. when tested in accordance with ASHRAE standard 193

TOUGHER

- Flame roll-out sensors standard
- Adjustable heating blower OFF delay
- Factory set blower ON delay
- RPJ® primary heat exchanger
- Stainless steel secondary heat exchanger
- High temperature limit control designed to prevent overheating
- Direct ignition with Silicon Nitride ignitor

QUIETER

- Operates quieter at lower heating rates
- Two-speed induced draft combustion blower
- Variable speed, constant torque ECM blower motor
- Fully insulated steel cabinet

EASIER TO INSTALL AND SERVICE

- Direct vent (2-pipe), single-pipe venting or ventilated combustion air
- Electronic Air Cleaner and Humidifier terminals
- 35" (889mm) high, for ease of installation
- Quarter turn knobs for easy door removal and secure attachment
- Factory shipped for natural gas, with propane gas conversion kits available
- Four position - upflow/downflow/horizontal (left/right) installation
- Twelve different venting configurations
- Through the casing flue pipe for counterflow or horizontal applications with accessory (order separately)
- Concentric vent available
- Slide out heat exchanger assembly and blower assembly
- Twinning capable (model sizes 0601714, 0801716, 0802120, 1002120, 1202422)
- 5 ton sizes (sizes 0802120, 1002120) allow 15 Amp breaker with acccessory (order separately)
- Compatible with 24V thermostats

LIMITED WARRANTY *

- 5 year No Hassle Replacementt limited warranty
- Lifetime heat exchanger limited warranty with timely registration
- 5 year parts limited warranty
  - With timely registration, an additional 5 year parts limited warranty
  - * For residential applications only. See warranty certificate for complete details and restrictions, including warranty coverage for other applications.

Model Number	Input (BTUH)	Efficiency AFUE		ENERGY STAR®	Cooling Capacity CFM range @ .5 in. w.c. (125 Pa)	Dimensions H x W x D Inches (Millimeters)	SHIP WT. LB (KG)
		Upflow/Hz	Downflow				
F96VTN0401410	40,000	96%	95%	Yes	445 - 1030	35 x 14-3/16 x 29-1/2 (889 x 361 x 750)	123 (55.8)
F96VTN0401712	40,000	96%	95%	Yes	400 - 1105	35 x 17-1/2 x 29-1/2 (889 x 445 x 750)	133 (60.3)
F96VTN0601412	60,000	95%	95%	Yes	445 - 1115	35 x 14-3/16 x 29-1/2 (889 x 361 x 750)	132 (59.9)
F96VTN0601714	60,000	96%	95%	Yes	210 - 1475	35 x 17-1/2 x 29-1/2 (889 x 445 x 750)	139 (63.0)
F96VTN0801716	80,000	96%	95%	Yes	360 - 1655	35 x 17-1/2 x 29-1/2 (889 x 445 x 750)	147 (66.7)
F96VTN0802120	80,000	96%	95%	Yes	440 - 2005	35 x 21 x 29-1/2 (889 x 533 x 750)	156 (70.7)
F96VTN1002120	100,000	96%	95%	Yes	405 - 2005	35 x 21 x 29-1/2 (889 x 533 x 750)	170 (77.1)
F96VTN1002122	100,000	96%	95%	Yes	975 - 2275	35 x 21 x 29-1/2 (889 x 533 x 750)	171 (77.6)
F96VTN1202422	120,000	96%	95%	Yes	505 - 2190	35 x 24-1/2 x 29-1/2 (889 x 622 x 750)	190 (86.2)

DIMENSIONAL DRAWING

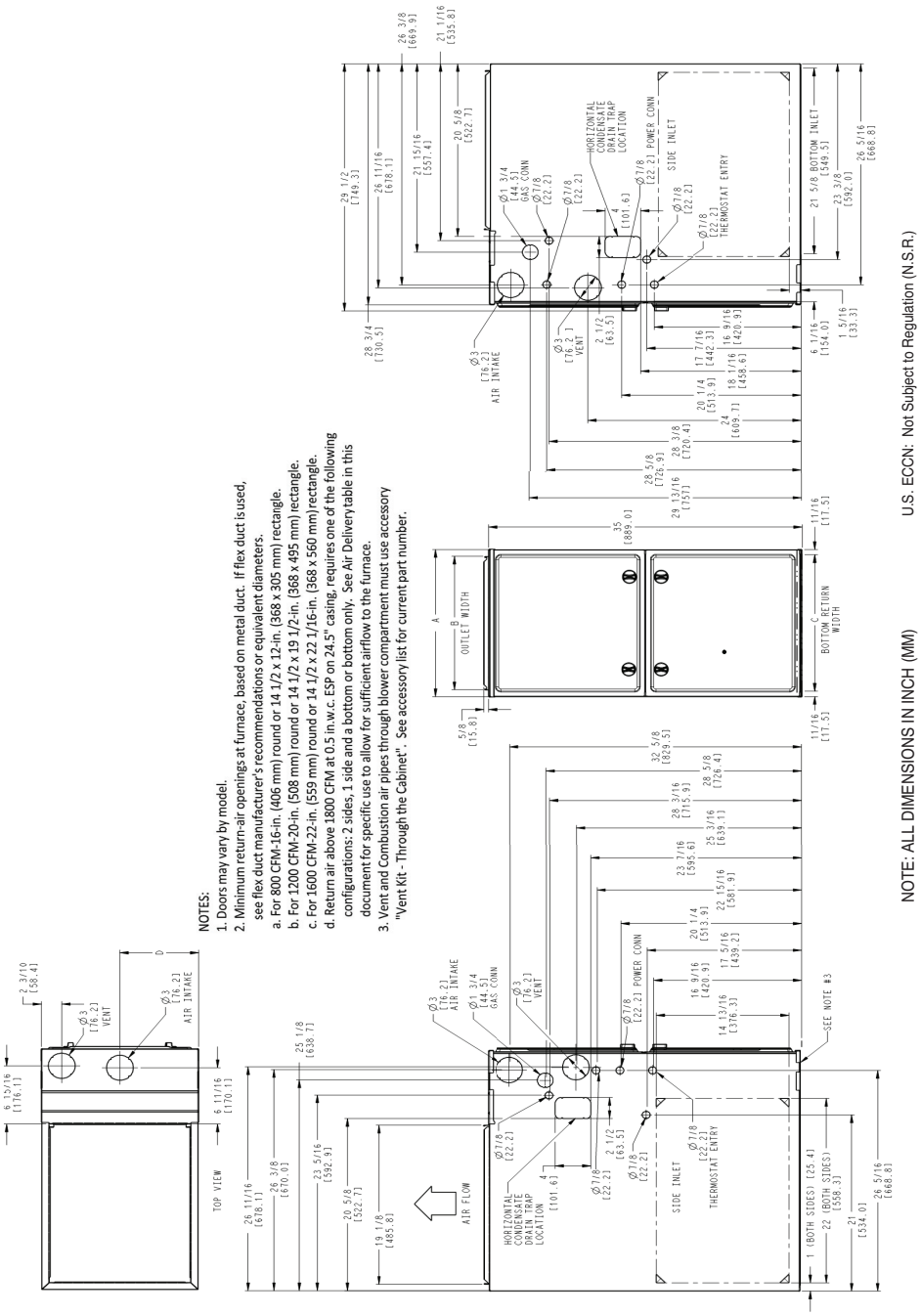

A200327

FURNACE SIZE	A	B	C	D	SHIP WT.
	CABINET WIDTH	OUTLET WIDTH	BOTTOM INLET WIDTH	AIR INTAKE	LB (KG)
F96VTN0401410	14-3/16 (361)	12-1/2 (319)	12-9/16 (322)	7-1/8 (181)	123 (55.8)
F96VTN0401712	17-1/2 (445)	15-7/8 (403)	16 (406)	8-3/4 (222)	133 (60.3)
F96VTN0601412	14-3/16 (361)	12-1/2 (319)	12-9/16 (322)	7-1/8 (181)	132 (59.9)
F96VTN0601714	17-1/2 (445)	15-7/8 (403)	16 (406)	8-3/4 (222)	139 (63.0)
F96VTN0801716	17-1/2 (445)	15-7/8 (403)	16 (406)	8-3/4 (222)	147 (66.7)
F96VTN0802120	21 (533)	19-3/8 (492)	19-1/2 (495)	10-1/2 (267)	156 (70.7)
F96VTN1002120	21 (533)	19-3/8 (492)	19-1/2 (495)	10-1/2 (267)	170 (77.1)
F96VTN1002122	21 (533)	19-3/8 (492)	19-1/2 (495)	10-1/2 (267)	171 (77.6)
F96VTN1202422	24-1/2 (622)	22-7/8 (581)	23 (584)	12-1/4 (311)	190 (86.2)

Manufacturer reserves the right to change, at any time, specifications and designs without notice and without obligations.

MODEL NUMBER NOMENCLATURE

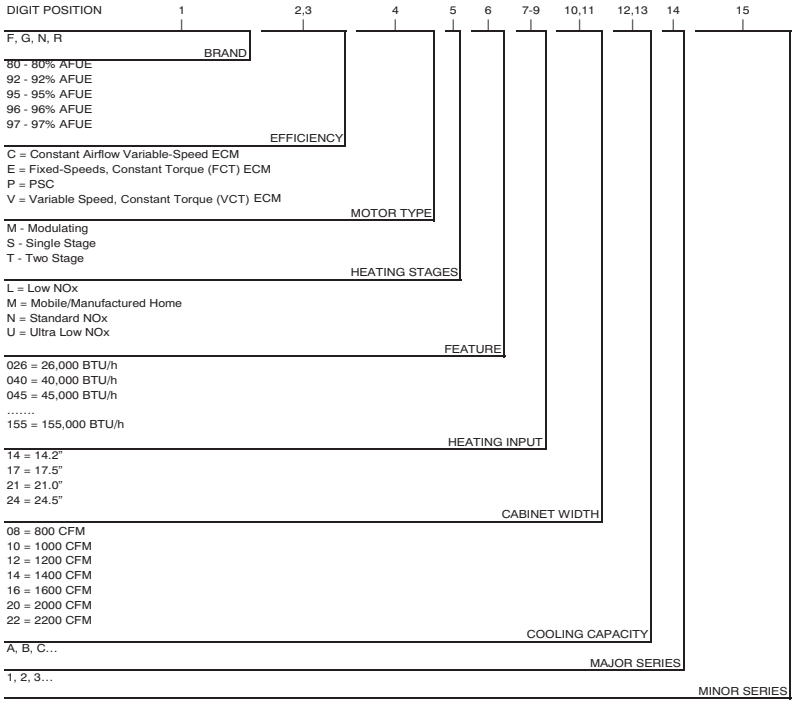

A190043

FURNACE COMPONENTS

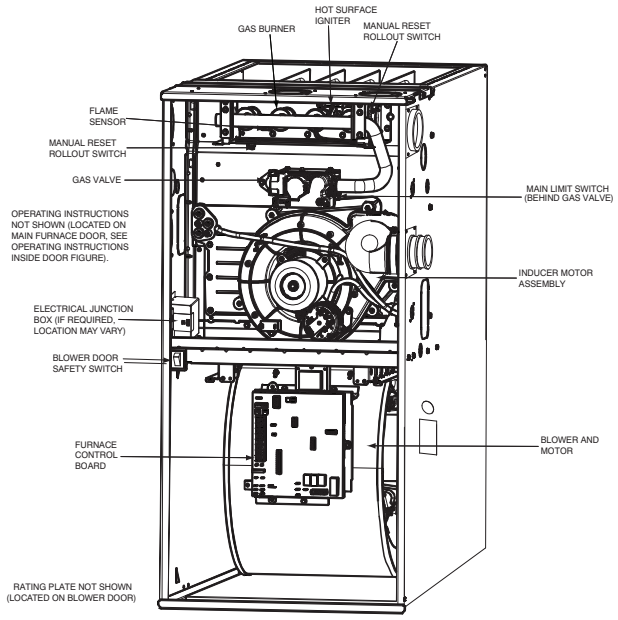

A190145

MINIMUM CLEARANCES TO COMBUSTIBLE MATERIALS FOR ALL UNITS

POSITION	CLEARANCE in.(mm)
REAR	0
FRONT (Combustion air openings in furnace and in structure)	1 (25)
Required for service*	24 (610)
All Sides of Supply Plenum*	1 (25)
Sides	0
Vent	0
Top of Furnace	1 (25)

*. Consult your local building codes

PHYSICAL DATA

Heating Capacity and Efficiency			0401410	0401712	0601412	0601714	0801716	0802120	1002120	1002122	1202422
Input	High Heat	(BTUH)	40,000	40,000	60,000	60,000	80,000	80,000	100,000	100,000	120,000
	Low Heat	(BTUH)	26,000	26,000	39,000	39,000	52,000	52,000	65,000	65,000	78,000
Output	High Heat	(BTUH)	39,000	39,000	58,000	58,000	78,000	78,000	97,000	97,000	117,000
	Low Heat	(BTUH)	25,000	25,000	38,000	38,000	50,000	51,000	63,000	63,000	76,000
Certified Temperature Rise Range °F (ºC)		High Heat	40 - 70 (22 - 39)	40 - 70 (22 - 39)	40 - 70 (22 - 39)	40 - 70 (22 - 39)	40 - 70 (22 - 39)	40 - 70 (22 - 39)	40 - 70 (22 - 39)	40 - 70 (22 - 39)	40 - 70 (22 - 39)
		Low Heat	30 - 60 (17 - 33)	30 - 60 (17 - 33)	30 - 60 (17 - 33)	30 - 60 (17 - 33)	30 - 60 (17 - 33)	30 - 60 (17 - 33)	30 - 60 (17 - 33)	30 - 60 (17 - 33)	30 - 60 (17 - 33)
Airflow Capacity and Blower Data											
Rated External Static Pressure (in. w.c.)		Heating	0.10	0.10	0.12	0.12	0.15	0.15	0.20	0.20	0.20
		Cooling	0.50	0.50	0.50	0.50	0.50	0.50	0.50	0.50	0.50
Airflow Delivery @ Rated ESP (CFM)		High Heat	800	850	1110	1135	1450	1555	1865	1765	2120
		Low Heat	560	625	770	860	1130	1200	1435	1350	1625
		Cooling	1030	1105	1115	1475	1655	2005	2005	2275	2190
Cooling Capacity (tons) @ 400, 350 CFM/ton		400 CFM/ton	2	2.5	2.5	3.5	4	5	5	5.5	5
		350 CFM/ton	2.5	3	3	4	4.5	5.5	5.5	6	6
Direct-Drive Motor Type			Electronically Commutated Motor (ECM)								
Direct-Drive Motor HP			1/2	1/2	1/2	3/4	3/4	1	1	1	1
Motor Full Load Amps Default / Low Amp Kit*			6.3	6.5	6.3	10.1	9.2	13.9/10.4	13.9/10.4	10.4	11.7
RPM Range			600 - 2000	400 - 1200	600 - 2000	400 - 1200	400 - 1200	400 - 1200	400 - 1200	400 - 1300	400 - 1200
Speed Selections			Variable (PWM)								
Blower Wheel Dia x Width		in.	11 x 7	11 x 8	11 x 7	11 x 8	11 x 8	11 x 10	11 x 10	11 x 10	11 x 11
Air Filtration System			Field Supplied Filter								
Filter Used for Certified Watt Data			325531-40*								
Electrical Data											
Input Voltage		Volts-Hertz-Phase	115-60-1								
Operating Voltage Range		Min-Max	104-127								
Maximum Input Amps Default / Low Amp Kit{		Amps	7.0	7.2	7.1	10.9	10.0	14.7/11.3	14.7/11.3	12.6	12.6
Unit Ampacity Default / Low Amp Kit{		Amps	9.7	9.8	9.7	14.6	13.4	19.3/14.9	19.4/15.0	16.7	16.7
Minimum Wire Size Default / Low Amp Kit{		AWG	14	14	14	14	14	12/14	12/14	12	12
Maximum Wire Length @ Minimum Wire Size Default / Low Amp Kit{		Feet	38	37	38	25	27	29/24	29/24	34	34
		(M)	(11.7)	(11.5)	(11.7)	(7.7)	(8.4)	(9.0/7.5)	(9.0/7.5)	(10.5)	(10.5)
Maximum Fuse/Ckt Bkr (Time-Delay Type Recommended)Default / Low Amp Kit{		Amps	15	15	15	15	15	20/15	20/15	20	20
Transformer Capacity (24vac output)			VA								
External Control Power Available		Heating	24.3 VA								
		Cooling	34.6 VA								
Controls											
Gas Connection Size			1/2" - NPT								
Burners (Monoport)			2	2	3	3	4	4	5	5	6
Gas Valve (Redundant)		Manufacturer	White Rodgers								
Minimum Inlet Gas pressure (in. wc)			4.50								
Maximum Inlet Gas pressure (in. wc)			13.60								
Manufactured (Mobile) Home Kit			not approved for MH use								
Ignition Device			Silicon Nitride								
Heating Blower Control (Heating Off-Delay)			Adjustable: 90, 120, 150, 180 seconds								
Cooling Blower Control (Time Delay Relay)			90 seconds								
Communication System			None								
Thermostat Connections			R, W/W1, W2 Y/Y2, Y1, G, Com 24V, DHUM								
Accessory Connections			EAC (115vac); HUM (24vac); 1-stg. AC (via Y/Y2)								

*. Low Amp Kit (NAHA00101PC) allows select furnaces to be installed with a 15 Amp Breaker and 14 AWG wire within the listed wire length. Affected data shown as Default Value/Value with Lower Amp Kit.

AIR DELIVERY

Air Delivery - CFM (With Filter)

(SW1-5 and SW2-2 set to OFF, except as indicated. See notes 1 and 2.)

Unit Size: 0401410A	Clg/CF Switch settings			External Static Pressure (ESP)									
Clg Switches:	**SW2-8**	**SW2-7**	**SW2-6**	**0.1**	**0.2**	**0.3**	**0.4**	**0.5**	**0.6**	**0.7**	**0.8**	**0.9**	**1.0**
Clg Default:	OFF	OFF	OFF	1125	1105	1080	1055	1030	1005	975	955	930	905
Cooling (SW2-8,7,6)	OFF	OFF	ON	605	565	525	485	445	See Note 4				
	OFF	ON	OFF	760	730	695	655	625	590	555	525	490	455
	OFF	ON	ON	950	925	900	870	840	810	785	760	730	705
	ON	OFF	OFF	1125	1105	1080	1055	1030	1005	975	955	930	905
	ON	OFF	ON	1130	1105	1080	1055	1030	1005	980	955	930	905
	ON	ON	OFF	1130	1105	1080	1055	1030	1005	980	955	930	905
	ON	ON	ON	1130	1105	1080	1055	1030	1005	980	955	930	905
	Maximum Clg Airflow[2]			1130	1105	1080	1055	1030	1005	980	955	930	905
CF Switches	**SW2-5**	**SW2-4**	**SW2-3**										
Low-Clg Default:	OFF	OFF	OFF	605	565	525	485	445	See Note 4				
Low-Cooling (SW2-5,4,3)	OFF	OFF	ON	605	565	525	485	445	See Note 4				
	OFF	ON	OFF	760	730	695	655	625	590	555	525	490	455
	OFF	ON	ON	950	925	900	870	840	810	785	760	730	705
	ON	OFF	OFF	1125	1105	1080	1055	1030	1005	975	955	930	905
	ON	OFF	ON	1130	1105	1080	1055	1030	1005	980	955	930	905
	ON	ON	OFF	1130	1105	1080	1055	1030	1005	980	955	930	905
	ON	ON	ON	1130	1105	1080	1055	1030	1005	980	955	930	905
Cont. Fan Default:	OFF	OFF	OFF	385	335	See Note 4							
Continuous Fan (SW2-5,4,3)	OFF	OFF	ON	245	180	See Note 4							
	OFF	ON	OFF	310	245	See Note 4							
	OFF	ON	ON	385	335	See Note 4							
	ON	OFF	OFF	385	335	See Note 4							
	ON	OFF	ON	385	335	See Note 4							
	ON	ON	OFF	385	335	See Note 4							
	ON	ON	ON	385	335	See Note 4							
Heating (SW1)	High Heat Airflow[3]			800	770	730	700	665	635	605	570	540	510
	Low Heat Airflow[3]			560	520	470	425	390	See Note 4				

Unit Size: 0401712A	Clg/CF Switch settings			External Static Pressure (ESP)									
Clg Switches:	**SW2-8**	**SW2-7**	**SW2-6**	**0.1**	**0.2**	**0.3**	**0.4**	**0.5**	**0.6**	**0.7**	**0.8**	**0.9**	**1.0**
Clg Default:	OFF	OFF	OFF	1240	1210	1180	1145	1105	1060	1005	950	895	835
Cooling (SW2-8,7,6)	OFF	OFF	ON	585	540	490	445	400	360	315	265	210	155
	OFF	ON	OFF	780	740	695	655	620	580	545	510	480	445
	OFF	ON	ON	975	945	910	870	835	805	775	740	710	680
	ON	OFF	OFF	1170	1140	1115	1085	1050	1020	985	945	890	835
	ON	OFF	ON	1240	1210	1180	1145	1105	1060	1005	950	895	835
	ON	ON	OFF	1240	1210	1180	1145	1105	1060	1005	950	895	835
	ON	ON	ON	1240	1210	1180	1145	1105	1060	1005	950	895	835
	Maximum Clg Airflow[2]			1240	1210	1180	1145	1105	1060	1005	950	895	835
CF Switches	**SW2-5**	**SW2-4**	**SW2-3**										
Low-Clg Default:	OFF	OFF	OFF	585	540	490	445	400	See Note 4				
Low-Cooling (SW2-5,4,3)	OFF	OFF	ON	585	540	490	445	400	See Note 4				
	OFF	ON	OFF	780	740	695	655	620	580	545	510	480	445
	OFF	ON	ON	975	945	910	870	835	805	775	740	710	680
	ON	OFF	OFF	1170	1140	1115	1085	1050	1020	985	945	890	835
	ON	OFF	ON	1240	1210	1180	1145	1105	1060	1005	950	895	835
	ON	ON	OFF	1240	1210	1180	1145	1105	1060	1005	950	895	835
	ON	ON	ON	1240	1210	1180	1145	1105	1060	1005	950	895	835
Cont. Fan Default:	OFF	OFF	OFF	585	540	490	445	400	See Note 4				
Continuous Fan (SW2-5,4,3)	OFF	OFF	ON	305	235	See Note 4							
	OFF	ON	OFF	470	410	350	See Note 4						
	OFF	ON	ON	585	540	490	445	400	See Note 4				
	ON	OFF	OFF	585	540	490	445	400	See Note 4				
	ON	OFF	ON	585	540	490	445	400	See Note 4				
	ON	ON	OFF	585	540	490	445	400	See Note 4				
	ON	ON	ON	585	540	490	445	400	See Note 4				
Heating (SW1)	High Heat Airflow[3]			850	810	770	730	700	660	630	595	560	530
	Low Heat Airflow[3]			625	580	535	490	445	405	365	320	270	220

Air Delivery - CFM (With Filter) (Continued)

(SW1-5 and SW2-2 set to OFF, except as indicated. See notes 1 and 2.)

Unit Size: 0601412A	Clg/CF Switch settings			External Static Pressure (ESP)									
Clg Switches:	**SW2-8**	**SW2-7**	**SW2-6**	**0.1**	**0.2**	**0.3**	**0.4**	**0.5**	**0.6**	**0.7**	**0.8**	**0.9**	**1.0**
Clg Default:	OFF	OFF	OFF	1180	1150	1130	1100	1075	1045	1020	995	965	935
Cooling (SW2-8,7,6)	OFF	OFF	ON	625	585	540	495	445	See Note 4				
	OFF	ON	OFF	820	785	745	710	670	635	595	560	525	490
	OFF	ON	ON	1000	970	935	905	875	845	815	785	755	725
	ON	OFF	OFF	1180	1150	1130	1100	1075	1045	1020	995	965	935
	ON	OFF	ON	1220	1195	1170	1140	1115	1090	1065	1035	1010	985
	ON	ON	OFF	1220	1195	1170	1140	1115	1090	1065	1035	1010	985
	ON	ON	ON	1220	1195	1170	1140	1115	1090	1065	1035	1010	985
	Maximum Clg Airflow[2]			1220	1195	1170	1140	1115	1090	1065	1035	1010	985
CF Switches	**SW2-5**	**SW2-4**	**SW2-3**										
Low-Clg Default:	OFF	OFF	OFF	625	585	540	495	445	See Note 4				
Low-Cooling (SW2-5,4,3)	OFF	OFF	ON	625	585	540	495	445	See Note 4				
	OFF	ON	OFF	820	785	745	710	670	635	595	560	525	490
	OFF	ON	ON	1000	970	935	905	875	845	815	785	755	725
	ON	OFF	OFF	1180	1150	1130	1100	1075	1045	1020	995	965	935
	ON	OFF	ON	1220	1195	1170	1140	1115	1090	1065	1035	1010	985
	ON	ON	OFF	1220	1195	1170	1140	1115	1090	1065	1035	1010	985
	ON	ON	ON	1220	1195	1170	1140	1115	1090	1065	1035	1010	985
Cont. Fan Default:	OFF	OFF	OFF	375	315	See Note 4							
Continuous Fan (SW2-5,4,3)	OFF	OFF	ON	200	125	See Note 4							
	OFF	ON	OFF	285	215	See Note 4							
	OFF	ON	ON	375	315	See Note 4							
	ON	OFF	OFF	375	315	See Note 4							
	ON	OFF	ON	375	315	See Note 4							
	ON	ON	OFF	375	315	See Note 4							
	ON	ON	ON	375	315	See Note 4							
Heating (SW1)	High Heat Airflow3			1115	1090	1060	1035	1010	980	955	930	905	875
	Low Heat Airflow3			780	740	695	655	615	575	530	490	450	405

Unit Size: 0601714A	Clg/CF Switch settings			External Static Pressure (ESP)									
Clg Switches:	**SW2-8**	**SW2-7**	**SW2-6**	**0.1**	**0.2**	**0.3**	**0.4**	**0.5**	**0.6**	**0.7**	**0.8**	**0.9**	**1.0**
Clg Default:	OFF	OFF	OFF	1330	1295	1260	1220	1190	1150	1110	1075	1045	1005
Cooling (SW2-8,7,6)	OFF	OFF	ON	725	600	435	280	210	See Note 4				
	OFF	ON	OFF	780	725	660	615	540	See Note 4				
	OFF	ON	ON	975	925	875	835	785	750	690	655	610	570
	ON	OFF	OFF	1160	1120	1090	1045	1010	970	920	885	840	800
	ON	OFF	ON	1330	1295	1260	1220	1190	1150	1110	1075	1045	1005
	ON	ON	OFF	1705	1650	1595	1545	1475	1415	1340	1275	1200	1105
	ON	ON	ON	1705	1650	1595	1545	1475	1415	1340	1275	1200	1105
	Maximum Clg Airflow[2]			1705	1650	1595	1545	1475	1415	1340	1275	1200	1105
CF Switches	**SW2-5**	**SW2-4**	**SW2-3**										
Low-Clg Default:	OFF	OFF	OFF	725	600	435	280	210	See Note 4				
Low-Cooling (SW2-5,4,3)	OFF	OFF	ON	725	600	435	280	210	See Note 4				
	OFF	ON	OFF	780	725	660	615	540	See Note 4				
	OFF	ON	ON	975	925	875	835	785	750	690	655	610	570
	ON	OFF	OFF	1160	1120	1090	1045	1010	970	920	885	840	800
	ON	OFF	ON	1330	1295	1260	1220	1190	1150	1110	1075	1045	1005
	ON	ON	OFF	1705	1650	1595	1545	1475	1415	1340	1275	1200	1105
	ON	ON	ON	1705	1650	1595	1545	1475	1415	1340	1275	1200	1105
Cont. Fan Default:	OFF	OFF	OFF	725	600	435	280	210	See Note 4				
Continuous Fan (SW2-5,4,3)	OFF	OFF	ON	725	600	435	280	210	See Note 4				
	OFF	ON	OFF	780	725	660	615	540	See Note 4				
	OFF	ON	ON	975	925	875	835	785	750	690	655	610	570
	ON	OFF	OFF	975	925	875	835	785	750	690	655	610	570
	ON	OFF	ON	975	925	875	835	785	750	690	655	610	570
	ON	ON	OFF	975	925	875	835	785	750	690	655	610	570
	ON	ON	ON	975	925	875	835	785	750	690	655	610	570
Heating (SW1)	High Heat Airflow[3]			1145	1105	1075	1030	995	955	905	870	825	785
	Low Heat Airflow[3]			870	820	760	720	655	620	560	525	470	435

Air Delivery - CFM (With Filter) (Continued)

(SW1-5 and SW2-2 set to OFF, except as indicated. See notes 1 and 2.)

Unit Size: 0801716A	**Clg/CF Switch settings**			**External Static Pressure (ESP)**									
Clg Switches:	**SW2-8**	**SW2-7**	**SW2-6**	**0.1**	**0.2**	**0.3**	**0.4**	**0.5**	**0.6**	**0.7**	**0.8**	**0.9**	**1.0**
Clg Default:	OFF	OFF	OFF	1595	1560	1530	1500	1470	1440	1405	1370	1340	1290
Cooling (SW2-8,7,6)	OFF	OFF	ON	625	555	495	425	360	300	See Note 4			
	OFF	ON	OFF	810	755	700	645	595	540	480	425	380	330
	OFF	ON	ON	1040	995	950	900	860	815	770	725	680	630
	ON	OFF	OFF	1215	1175	1135	1095	1055	1015	975	935	900	860
	ON	OFF	ON	1390	1355	1320	1285	1245	1210	1175	1140	1105	1070
	ON	ON	OFF	1595	1560	1530	1500	1470	1440	1405	1370	1340	1290
	ON	ON	ON	1790	1760	1735	1700	1655	1610	1570	1485	1395	1295
	Maximum Clg Airflow[2]			1790	1760	1735	1700	1655	1610	1570	1485	1395	1295
CF Switches	**SW2-5**	**SW2-4**	**SW2-3**										
Low-Clg Default:	OFF	OFF	OFF	625	555	495	425	360	300	See Note 4			
Low-Cooling (SW2-5,4,3)	OFF	OFF	ON	625	555	495	425	360	300	See Note 4			
	OFF	ON	OFF	810	755	700	645	595	540	480	425	380	330
	OFF	ON	ON	1040	995	950	900	860	815	770	725	680	630
	ON	OFF	OFF	1215	1175	1135	1095	1055	1015	975	935	900	860
	ON	OFF	ON	1390	1355	1320	1285	1245	1210	1175	1140	1105	1070
	ON	ON	OFF	1595	1560	1530	1500	1470	1440	1405	1370	1340	1290
	ON	ON	ON	1790	1760	1735	1700	1655	1610	1570	1485	1395	1295
Cont. Fan Default:	OFF	OFF	OFF	625	555	495	425	360	300	See Note 4			
Continuous Fan (SW2-5,4,3)	OFF	OFF	ON	465	390	300	See Note 4						
	OFF	ON	OFF	625	555	495	425	360	300	See Note 4			
	OFF	ON	ON	690	630	570	510	445	385	See Note 4			
	ON	OFF	OFF	690	630	570	510	445	385	See Note 4			
	ON	OFF	ON	690	630	570	510	445	385	See Note 4			
	ON	ON	OFF	690	630	570	510	445	385	See Note 4			
	ON	ON	ON	690	630	570	510	445	385	See Note 4			
Heating (SW1)	High Heat Airflow[3]			1470	1435	1400	1365	1330	1295	1260	1225	1190	1155
	Low Heat Airflow[3]			1150	1110	1070	1030	990	950	910	870	830	790

Unit Size: 0802120A	**Clg/CF Switch settings**			**External Static Pressure (ESP)**									
Clg Switches:	**SW2-8**	**SW2-7**	**SW2-6**	**0.1**	**0.2**	**0.3**	**0.4**	**0.5**	**0.6**	**0.7**	**0.8**	**0.9**	**1.0**
Clg Default:	OFF	OFF	OFF	1905	1870	1825	1785	1750	1700	1665	1625	1560	1460
Cooling (SW2-8,7,6)	OFF	OFF	ON	950	770	620	515	440	365	See Note 4			
	OFF	ON	OFF	1015	935	880	825	765	690	625	580	See Note 4	
	OFF	ON	ON	1155	1105	1040	990	920	875	815	755	710	645
	ON	OFF	OFF	1335	1290	1245	1190	1145	1085	1040	990	930	890
	ON	OFF	ON	1520	1485	1435	1390	1340	1300	1255	1200	1160	1115
	ON	ON	OFF	1905	1870	1825	1785	1750	1700	1665	1625	1560	1460
	ON	ON	ON	2290	2230	2160	2085	2005	1915	1820	1730	1640	1525
	Maximum Clg Airflow[2]			2290	2230	2160	2085	2005	1915	1820	1730	1640	1525
CF Switches	**SW2-5**	**SW2-4**	**SW2-3**										
Low-Clg Default:	OFF	OFF	OFF	950	770	620	515	440	365	See Note 4			
Low-Cooling (SW2-5,4,3)	OFF	OFF	ON	645	540	435	See Note 4						
	OFF	ON	OFF	950	770	620	515	440	365	See Note 4			
	OFF	ON	ON	1015	935	880	825	765	690	625	580	See Note 4	
	ON	OFF	OFF	1155	1105	1040	990	920	875	815	755	710	645
	ON	OFF	ON	1335	1290	1245	1190	1145	1085	1040	990	930	890
	ON	ON	OFF	1520	1485	1435	1390	1340	1300	1255	1200	1160	1115
	ON	ON	ON	1905	1870	1825	1785	1750	1700	1665	1625	1560	1460
Cont. Fan Default:	OFF	OFF	OFF	950	770	620	515	440	365	See Note 4			
Continuous Fan (SW2-5,4,3)	OFF	OFF	ON	645	540	435	See Note 4						
	OFF	ON	OFF	950	770	620	515	440	365	See Note 4			
	OFF	ON	ON	1015	935	880	825	765	690	625	580	See Note 4	
	ON	OFF	OFF	1155	1105	1040	990	920	875	815	755	710	645
	ON	OFF	ON	1335	1290	1245	1190	1145	1085	1040	990	930	890
	ON	ON	OFF	1520	1485	1435	1390	1340	1300	1255	1200	1160	1115
	ON	ON	ON	1520	1485	1435	1390	1340	1300	1255	1200	1160	1115
Heating (SW1)	High Heat Airflow[3]			1575	1535	1485	1445	1400	1350	1310	1260	1215	1170
	Low Heat Airflow[3]			1230	1170	1125	1065	1015	955	900	855	795	755

Air Delivery - CFM (With Filter) (Continued)

(SW1-5 and SW2-2 set to OFF, except as indicated. See notes 1 and 2.)

Unit Size: 1002120A	Clg/CF Switch settings			External Static Pressure (ESP)									
Clg Switches:	**SW2-8**	**SW2-7**	**SW2-6**	**0.1**	**0.2**	**0.3**	**0.4**	**0.5**	**0.6**	**0.7**	**0.8**	**0.9**	**1.0**
Clg Default:	OFF	OFF	OFF	1890	1845	1800	1755	1700	1655	1610	1560	1510	1460
Cooling (SW2-8,7,6)	OFF	OFF	ON	1015	825	630	485	405	325	See Note 4			
	OFF	ON	OFF	1080	895	815	740	690	615	555	475	See Note 4	
	OFF	ON	ON	1155	1080	1020	940	890	825	785	710	660	590
	ON	OFF	OFF	1310	1260	1195	1140	1075	1025	970	925	875	810
	ON	OFF	ON	1520	1475	1425	1365	1315	1255	1210	1155	1110	1055
	ON	ON	OFF	1890	1845	1800	1755	1700	1655	1610	1560	1510	1460
	ON	ON	ON	2290	2230	2160	2085	2005	1915	1820	1730	1640	1525
	Maximum Clg Airflow[2]			2290	2230	2160	2085	2005	1915	1820	1730	1640	1525
CF Switches	**SW2-5**	**SW2-4**	**SW2-3**										
Low-Clg Default:	OFF	OFF	OFF	1015	825	630	485	405	325	See Note 4			
Low-Cooling (SW2-5,4,3)	OFF	OFF	ON	745	640	535	See Note 4						
	OFF	ON	OFF	1015	825	630	485	405	325	See Note 4			
	OFF	ON	ON	1080	895	815	740	690	615	555	475	See Note 4	
	ON	OFF	OFF	1155	1080	1020	940	890	825	785	710	660	590
	ON	OFF	ON	1310	1260	1195	1140	1075	1025	970	925	875	810
	ON	ON	OFF	1520	1475	1425	1365	1315	1255	1210	1155	1110	1055
	ON	ON	ON	1890	1845	1800	1755	1700	1655	1610	1560	1510	1460
Cont. Fan Default:	OFF	OFF	OFF	1015	825	630	485	405	325	See Note 4			
Continuous Fan (SW2-5,4,3)	OFF	OFF	ON	745	640	535	See Note 4						
	OFF	ON	OFF	1015	825	630	485	405	325	See Note 4			
	OFF	ON	ON	1080	895	815	740	690	615	555	475	See Note 4	
	ON	OFF	OFF	1155	1080	1020	940	890	825	785	710	660	590
	ON	OFF	ON	1155	1080	1020	940	890	825	785	710	660	590
	ON	ON	OFF	1155	1080	1020	940	890	825	785	710	660	590
	ON	ON	ON	1155	1080	1020	940	890	825	785	710	660	590
Heating (SW1)	High Heat Airflow[3]			1905	1865	1825	1775	1730	1685	1640	1590	1545	1490
	Low Heat Airflow[3]			1480	1435	1375	1330	1265	1215	1160	1115	1060	1005

Unit Size: 1002122A	Clg/CF Switch settings			External Static Pressure (ESP)									
Clg Switches:	**SW2-8**	**SW2-7**	**SW2-6**	**0.1**	**0.2**	**0.3**	**0.4**	**0.5**	**0.6**	**0.7**	**0.8**	**0.9**	**1.0**
Clg Default:	OFF	OFF	OFF	1990	1945	1905	1865	1820	1780	1735	1695	1650	1600
Cooling (SW2-8,7,6)	OFF	OFF	ON	885	800	700	See Note 4						
	OFF	ON	OFF	1105	1035	955	870	See Note 4					
	OFF	ON	ON	1255	1190	1125	1055	975	See Note 4				
	ON	OFF	OFF	1445	1390	1330	1270	1210	1140	1075	See Note 4		
	ON	OFF	ON	1655	1610	1560	1505	1455	1400	1345	1285	See Note 4	
	ON	ON	OFF	1990	1945	1905	1865	1820	1780	1735	1695	1650	1600
	ON	ON	ON	2135	2095	2060	2025	1985	1945	1905	1865	1820	1780
	Maximum Clg Airflow[2]			2440	2405	2365	2320	2275	2230	2180	2135	2080	2030
CF Switches	**SW2-5**	**SW2-4**	**SW2-3**										
Low-Clg Default:	OFF	OFF	OFF	885	800	700	See Note 4						
Low-Cooling (SW2-5,4,3)	OFF	OFF	ON	740	630	See Note 4							
	OFF	ON	OFF	885	800	700	See Note 4						
	OFF	ON	ON	1105	1035	955	870	See Note 4					
	ON	OFF	OFF	1255	1190	1125	1055	975	See Note 4				
	ON	OFF	ON	1445	1390	1330	1270	1210	1140	1075	See Note 4		
	ON	ON	OFF	1655	1610	1560	1505	1455	1400	1345	1285	See Note 4	
	ON	ON	ON	1990	1945	1905	1865	1820	1780	1735	1695	1650	1600
Cont. Fan Default:	OFF	OFF	OFF	885	800	700	See Note 4						
Continuous Fan (SW2-5,4,3)	OFF	OFF	ON	740	630	See Note 4							
	OFF	ON	OFF	885	800	700	See Note 4						
	OFF	ON	ON	1105	1035	955	870	See Note 4					
	ON	OFF	OFF	1255	1190	1125	1055	975	See Note 4				
	ON	OFF	ON	1445	1390	1330	1270	1210	1140	1075	See Note 4		
	ON	ON	OFF	1655	1610	1560	1505	1455	1400	1345	1285	See Note 4	
	ON	ON	ON	1655	1610	1560	1505	1455	1400	1345	1285	See Note 4	
Heating (SW1)	High Heat Airflow[3]			1810	1765	1720	1675	1625	1575	1525	1475	1425	1375
	Low Heat Airflow[3]			1405	1350	1290	1225	1160	1100	See Note 4			

Air Delivery - CFM (With Filter) (Continued)

(SW1-5 and SW2-2 set to OFF, except as indicated. See notes 1 and 2.)													
Unit Size: 1202422A	**Clg/CF Switch settings**			**External Static Pressure (ESP)**									
Clg Switches:	**SW2-8**	**SW2-7**	**SW2-6**	**0.1**	**0.2**	**0.3**	**0.4**	**0.5**	**0.6**	**0.7**	**0.8**	**0.9**	**1.0**
Clg Default:	OFF	OFF	OFF	2060	2015	1975	1930	1885	1840	1790	1750	1705	1630
Cooling (SW2-8,7,6)	OFF	OFF	ON	865	775	690	595	505	425	See Note 4			
	OFF	ON	OFF	1080	1005	935	860	785	705	625	555	490	425
	OFF	ON	ON	1285	1220	1150	1085	1020	960	895	820	750	690
	ON	OFF	OFF	1465	1410	1350	1285	1230	1175	1115	1060	1000	935
	ON	OFF	ON	1685	1635	1585	1530	1475	1420	1375	1325	1270	1225
	ON	ON	OFF	2060	2015	1975	1930	1885	1840	1790	1750	1705	1630
	ON	ON	ON	2265	2225	2180	2145	2100	2060	2010	1895	1770	1645
	Maximum Clg Airflow[2]			2320	2310	2270	2230	2190	2135	2020	1895	1770	1645
CF Switches	**SW2-5**	**SW2-4**	**SW2-3**										
Low-Clg Default:	OFF	OFF	OFF	865	775	690	595	505	425	See Note 4			
Low-Cooling (SW2-5,4,3)	OFF	OFF	ON	585	470	See Note 4							
	OFF	ON	OFF	865	775	690	595	505	425	See Note 4			
	OFF	ON	ON	1080	1005	935	860	785	705	625	555	490	425
	ON	OFF	OFF	1285	1220	1150	1085	1020	960	895	820	750	690
	ON	OFF	ON	1465	1410	1350	1285	1230	1175	1115	1060	1000	935
	ON	ON	OFF	1685	1635	1585	1530	1475	1420	1375	1325	1270	1225
	ON	ON	ON	2060	2015	1975	1930	1885	1840	1790	1750	1705	1630
Cont. Fan Default:	OFF	OFF	OFF	865	775	690	595	505	425	See Note 4			
Continuous Fan (SW2-5,4,3)	OFF	OFF	ON	585	470	See Note 4							
	OFF	ON	OFF	730	630	See Note 4							
	OFF	ON	ON	865	775	690	595	505	425	See Note 4			
	ON	OFF	OFF	865	775	690	595	505	425	See Note 4			
	ON	OFF	ON	865	775	690	595	505	425	See Note 4			
	ON	ON	OFF	865	775	690	595	505	425	See Note 4			
	ON	ON	ON	865	775	690	595	505	425	See Note 4			
Heating (SW1)	High Heat Airflow[3]			2165	2120	2075	2030	1985	1940	1895	1850	1770	1645
	Low Heat Airflow[3]			1675	1625	1575	1525	1475	1425	1375	1325	1275	1225

NOTES for Cooling and Heating Air Delivery - CFM (Bottom Return with Filter)

1. Nominal 350 CFM/ton cooling airflow is delivered with SW1-5 and SW2-2 set to OFF.
   Set both SW1-5 and SW2-2 to ON for +7% airflow (nominal 370 CFM/ton)
   Set SW1-5 to ON and SW2-2 to OFF for +15% airflow (nominal 400 CFM/ton)
   Set SW1-5 to OFF and SW2-2 to ON for -7% airflow (nominal 325 CFM/ton)
   The above adjustments in airflow are subject to motor horsepower range/capacity
   This applies to Cooling and Low-Cooling airflow, but does not affect continuous fan airflow.
2. Maximum cooling airflow is achieved when switches SW2-6, SW2-7, SW2-8 and SW1-5 are set to ON, and SW2-2 is set to OFF.
3. All heating CFM's are when comfort/efficiency adjustment switch SW1-4 is set to OFF.
4. Ductwork must be sized for high-heating CFM within the operational range of ESP. Operation within the blank areas of the chart is not recommended because high-heat operation will be above 1.0 ESP.
5. All airflows on 21" (533 mm) casing size furnaces are 5% less on side-return only installations.
6. Side returns for 24.5" (622 mm) casing sizes require two sides, or a side and bottom to allow sufficient airflow at the return of the furnace.
7. Airflows over 1800 CFM require bottom return, two-side return, or bottom and side return or excessive watt draw may result. A minimum filter size of 20x25" (508 x 635 mm) is required.

FURNACE SETUP SWITCH DESCRIPTION

DIP SWITCH CONFIGURATION

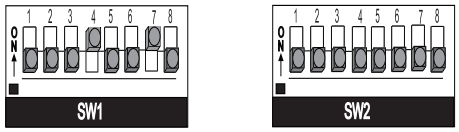

SW1

Switch	Description		Factory
1	**Status Code Recovery** - Turn ON to retrieve status codes.	See manual for use.	OFF
2	**Low Heat Only** - SW1 - 2 OFF allows two-stage operation SW1 - 2 ON for two-stage operation using two-stage TSTAT.	using single stage TSTAT (Adaptive Heat Mode).	OFF
3	**Not used**		OFF
4	**Comfort/Efficiency Adjust** - Turn ON to decrease low- approximately 10% for maximum comfort.	heat airflow by approximately 7% and high-heat	ON
5	**CFM per Ton Adjust** - See Airflow Tables in manual for	desired settings. Also see SW2 - 2.	OFF
6	**Component Self Test** - Turn ON to initiate Component disconnected. Turn OFF when Self Test is completed.	Self Test for troubleshooting assistance when R TSTAT lead is	OFF
7 & 8	**Blower Off Delay** - See manual or unit wiring diagram for Factory default is 120 Seconds.	settings. Adjustable 90 - 180 seconds.	7-ON 8-OFF

SW2

Switch	Description		Factory
1	**Twinning** - When Twinned furnace setup is required. SW2 - 1 SW2-1 ON selects the secondary furnace unit. See kit instructions	OFF selects the main furnace unit. for further details.	OFF
2	**CFM per Ton Adjust** - See Airflow Tables in manual for	desired settings. Also see SW1 - 5.	OFF
3-5	**CF Setup Switches** - The Continuous Fan setup switch selects airflow. See Cooling Air Delivery Tables and Continuous Fan delivery	desired CF and low-stage cooling (two-stage A/C units) Tables (when present) for specific switch settings.	ALL OFF
6-8	**A/C Setup Switches** - The Air Conditioning setup switch units) airflow. See Cooling Air Delivery Tables in manual for specific	selects desired cooling or high-stage cooling (two-stage switch settings.	ALL OFF

A190148

A/C OR CF AIRFLOW BASED ON COOLING UNIT TONNAGE (FOR PWM MODELS)

CF								
AC								
MODEL SIZE								
2.5T-40	DEF	1.5T(2)	2T	2.5T	2.5T(1)	2.5T	2.5T	2.5T
3T-40	DEF	1.5T(2)	2T	2.5T	3T(1)	3T	3T	3T
3T-60	DEF	1.5T(2)	2T	2.5T	3T	3T(1)	3T	3T
3.5T-60	DEF	1.5T(2)	2T	2.5T	3T	3.5T(1)	3.5T	3.5T
4T- 80	DEF	1.5T(2)	2T	2.5T	3T	3.5T	4T(1)	4T
5T-80, 100	DEF	2T(2)	2.5T	3T	3.5T	4T	5T(1)	5T
120	DEF	2T	2.5T(2)	3T	3.5T	4T	5T(1)	5.5T

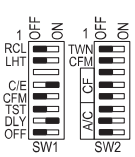

1. Default A/C airflow when A/C setup switches are in OFF position.
2. Default Low-Stage A/C airflow when CF switches are in OFF position

A190048

ACCESSORIES

PART NUMBER	COMPONENT NAME	DESCRIPTION	0401410	0601714	0601412	0601714
NAHB001101CT	EXTERNAL TRAP KIT	CONDENSATE TRAP	X	X	X	X
NAHA00110DA	DRAIN ACCESSORY	1/2” CPVC TO 3/4” PVC (10 PACK)	X	X	X	X
NAHA002CV	VENT TERMINATION KIT	2” CONCENTRIC VENT	X	X	X	X
NAHA001CV		3” CONCENTRIC VENT		X	-	X
NAHA00101VC	INTERNAL VENT KIT	THROUGH THE CABINET	X	X	X	X
NAHA00301VT	DIRECT VENT TERMINATION KIT	2” BRACKET	X	X	X	X
NAHA00401VT		3” BRACKET	-	X	-	X
NAHA00101CK	INLET AIR PIPE COUPLING	COUPLING FOR POLYPROPYLENE VENT SYSTEMS	X	X	X	X
NAHA00101HV	HORIZONTAL INSTALLATION KIT	TRAP GROMMET (DIRECT VENT APPLICATION ONLY)	X	X	X	X
NAHA00101HH	FREEZE PROTECT KIT	CONDENSATE DRAIN LINE - TAPE	X	X	X	X
NAHA00201HH	CONDENSATE FREEZE PROTECT KIT	CONDENSATE TRAP WITH HEAT PAD	X	X	X	X
NAHA01101SB	FLOOR BASE KIT	COMBUSTIBLE FLOOR	X	X	X	X
AGAGC9NPS01B*	GAS CONVERSION KIT	NATURAL TO PROPANE	X	X	X	X
AGAGC9PNS01B*		PROPANE TO NATURAL	X	X	X	X
1188594†	GAS VALVE TOWER PORT ADAPTER KIT	ADAPTER FOR GAS VALVE	X	X	X	X
325531-402†	WASHABLE FILTER	3/4” X 16” X 25” WASHABLE FILTER	X	X	X	X
FHG1425-2†	EXTERNAL BOTTOM FILTER RACK	14”-1/2 X 25” WASHABLE FILTER INCLUDED	X	-	X	-
FHG1625-2†		16” X 25” WASHABLE FILTER INCLUDED	-	X	-	X
NAHB00101CA	COIL ADAPTER KIT	WITH NO OFFSET	X	X	X	X
NAHB00201CA		WITH SINGLE OFFSET	X	X	X	X
NAHB00301CA		WITH DOUBLE OFFSET	X	X	X	X
NAHA01401RA	RETURN AIR KIT	14-3/16” WIDE	X	-	X	-
NAHA01701RA		17-1/2” WIDE	-	X	-	X
NAHA001NK	CONDENSATE NEUTRALIZER KIT	NEUTRALIZES CONDENSATE	X	X	X	X
AGATWNPME01B	TWINNING KIT	TWO FURNACES OF SAME MODEL & SERIES	-	-	-	X

*. Factory authorized and field installed. Gas conversion kits are CSA recognized.
†. Order through FAST Parts.
X = Accessory available

ACCESSORIES (continued)

PART NUMBER	COMPONENT NAME	DESCRIPTION	0801716	0802120	1002120	1002122	1202422
NAHB001101CT	EXTERNAL TRAP KIT	CONDENSATE TRAP	X	X	X	X	X
NAHA00110DA	DRAIN ACCESSORY	1/2” CPVC to 3/4” PVC (10 PACK)	X	X	X	X	X
NAHA002CV	VENT TERMINATION KIT	2” CONCENTRIC VENT	X	X	X	X	-
NAHA001CV		3” CONCENTRIC VENT	X	X	X	X	X
NAHA00101VC	INTERNAL VENT KIT	THROUGH THE CABINET	X	X	X	X	X
NAHA00301VT	DIRECT VENT TERMINATION KIT	2” BRACKET	X	X	X	X	-
NAHA00401VT		3” BRACKET	X	X	X	X	X
NAHA00101CK	INLET AIR PIPE COUPLING	COUPLING FOR POLYPROPYLENE VENT SYSTEMS	X	X	X	X	X
NAHA00101HV	HORIZONTAL INSTALLATION KIT	TRAP GROMMET (direct Vent application only)	X	X	X	X	X
NAHA00101HH	FREEZE PROTECT KIT	CONDENSATE DRAIN LINE - Tape	X	X	X	X	X
NAHA00201HH	CONDENSATE FREEZE PROTECT KIT	CONDENSATE TRAP WITH HEAT PAD	X	X	X	X	X
NAHA01101SB	FLOOR BASE KIT	COMBUSTIBLE FLOOR	X	X	X	X	X
AGAGC9NPS01B*	GAS CONVERSION KIT	NATURAL TO PROPANE	X	X	X	X	X
AGAGC9PNS01B*		PROPANE TO NATURAL	X	X	X	X	X
1188594†	GAS VALVE TOWER PORT ADAPTER KIT	ADAPTER FOR GAS VALVE	X	X	X	X	X
325531-402†	WASHABLE FILTER	3/4” X 16” x 25” WASHABLE FILTER	X	-	-	-	-
325531-403†		3/4” X 20 X 25” WASHABLE FILTER INCLUDED	-	X	X	X	-
325531-404†		3/4” X 24 X 25” WASHABLE FILTER INCLUDED	-	-	X	-	X
FHG1625-2†	EXTERNAL BOTTOM FILTER RACK	17-1/2” X 25” WASHABLE FILTER INCLUDED	X	-	-	-	-
FHG2025-2†		21” X 25” WASHABLE FILTER INCLUDED	-	X	X	X	-
FHG2424-2†		24-1/2” X 25” WASHABLE FILTER INCLUDED	-	-	-	-	X
NAHB00101CA	COIL ADAPTER KIT	WITH NO OFFSET	X	X	X	X	X
NAHB00201CA		WITH SINGLE OFFSET	X	X	X	X	X
NAHB00301CA		WITH DOUBLE OFFSET	X	X	X	X	X
NAHA01701RA	RETURN AIR KIT	17-1/2” wide	X	-	-	-	-
NAHA02101RA		21” wide	-	X	X	X	-
NAHA02401RA		24-1/2” wide	-	-	-	-	X
AGATWNPME01A	TWINNING KIT	TWO FURNACES OF SAME MODEL & SERIES	X	X	X	-	X
NAHA001NK	CONDENSATE NEUTRALIZER KIT	NEUTRALIZES CONDENSATE	X	X	X	X	X
NAHA00101PC	LOWER AMP KIT	ALLOWS 15 AMP BREAKER	-	X	X	-	-

*. Factory authorized and field installed. Gas conversion kits are CSA recognized.
†. Order through FAST Parts.
X = Accessory available

ORIFICES

DESCRIPTION		
Gas Orifice Kit - #42 (Nat Gas)	1185612	See Installation Instructions for model, altitude, and heat value usages.
Gas Orifice Kit - #43 (Nat Gas)	1176928	
Gas Orifice Kit - #44 (Nat Gas)	1185574	
Gas Orifice Kit - #45 (Nat Gas)	1177213	
Gas Orifice Kit - #46 (Nat Gas)	1183809	
Gas Orifice Kit - #47 (Nat Gas)	1185613	
Gas Orifice Kit - #48 (Nat Gas)	1185614	
Gas Orifice Kit - 1.25mm (LP)	1185617	

© 2020 Carrier. All rights reserved.

Manufacturer reserves the right to change, at any time, specifications and designs without notice and without obligations.