F96CTN
Up to 96.7% AFUE, Communicating Two-Stage Gas Furnace

Arcoaire® Air Conditioning & Heating

Product Specifications

SYST0101CW
Recommended
(sold separately)

A200355

⚠ WARNING

CARBON MONOXIDE POISONING AND FIRE HAZARD

Failure to follow this warning could result in personal injury, death, and/or property damage.

This furnace is not designed for use in recreation vehicles, manufactured (mobile) homes or outdoors.

Failure to follow this warning could result in personal injury, death, and/or property damage.

Use of the AHRI Certified TM Mark indicates a manufacturer's participation in the program. For verification of certification for individual products, go to www.ahridirectory.org .

ISO 9001 Quality

A200326

EASIER TO SELL

- Up to 96.7% AFUE in upflow and horizontal positions 95% AFUE in downflow position
- Two-stage heating operation
- ION™ Communicating Control System
- Variable-speed, constant airflow ECM blower motor for extra SEER boost with select cooling equipment
- Supports single-stage, two-stage, and variable speed cooling units
- Dehumidification feature in cooling
- All sizes can be installed in air quality management districts with a 40 ng/J NOx emissions requirement
- Cabinet air leakage less than 2.0% at 1.0 in. W.C. and cabinet air leakage less than 1.4% at 0.5 in. W.C. when tested in accordance with ASHRAE standard 193

TOUGHER

- Flame roll-out sensors standard
- Adjustable heating blower OFF delay
- Factory set blower ON delay
- RPJ® primary heat exchanger
- Stainless steel secondary heat exchanger
- High temperature limit control designed to prevent overheating
- Direct ignition with Silicon Nitride ignitor

QUIETER

- Operates quieter at lower heating rates
- Two-speed induced draft combustion blower
- Variable speed, constant airflow ECM blower motor
- Fully insulated steel cabinet

EASIER TO INSTALL AND SERVICE

- Direct vent (2-pipe), single-pipe venting or ventilated combustion air
- 24 VAC humidifier terminal
- Electronic air cleaner terminal
- 35” (889mm) high, for ease of installation
- Quarter turn knobs for easy door removal and secure attachment
- Convertible to propane with gas conversion accessory kit
- Four position - upflow/downflow/horizontal (left/right) installation
- At least twelve different venting configurations
- Through the casing flue pipe for counterflow or horizontal applications with accessory (order separately)
- Self-configuring and communicating control
- Concentric vent available
- Slide out heat exchanger assembly and blower assembly

LIMITED WARRANTY *

- 10 year No Hassle Replacement™ limited warranty
- Lifetime heat exchanger limited warranty with timely registration
- 5 year parts limited warranty

-With timely registration, an additional 5 year parts limited warranty

*For residential applications only. See warranty certificate for complete details and restrictions, including warranty coverage for other applications.

Model Number	Input (BTUH)	Efficiency AFUE		ENERGY STAR®	Cooling Capacity CFM range @ .5 in. w.c. (125 Pa)	Dimensions H x W x D Inches (Millimeters)	Shipping Wt. Lbs (Kg)
		Upflow/Hz	Downflow				
F96CTN0601714	60,000	96.3%	95%	X	530 - 1280	35 x 17-1/2 x 29-1/2 (889 x 445 x 750)	151.0 (68.5)
F96CTN0801714	80,000	96.2%	95%	X	520 - 1310	35 x 17-1/2 x 29-1/2 (889 x 445 x 750)	152.5 (69.2)
F96CTN0802120	80,000	96.7%	95%	X	750 - 1945	35 x 21 x 29-1/2 (889 x 533 x 750)	171.5 (77.8)
F96CTN1002122	100,000	96.1%	95%	X	715 - 2160	35 x 21 x 29-1/2 (889 x 533 x 750)	179.0 (81.2)
F96CTN1202422	120,000	96.5%	95%	X	705 - 2135	35 x 24-1/2 x 29-1/2 (889 x 622 x 750)	195.0 (88.4)

DIMENSIONAL DRAWING

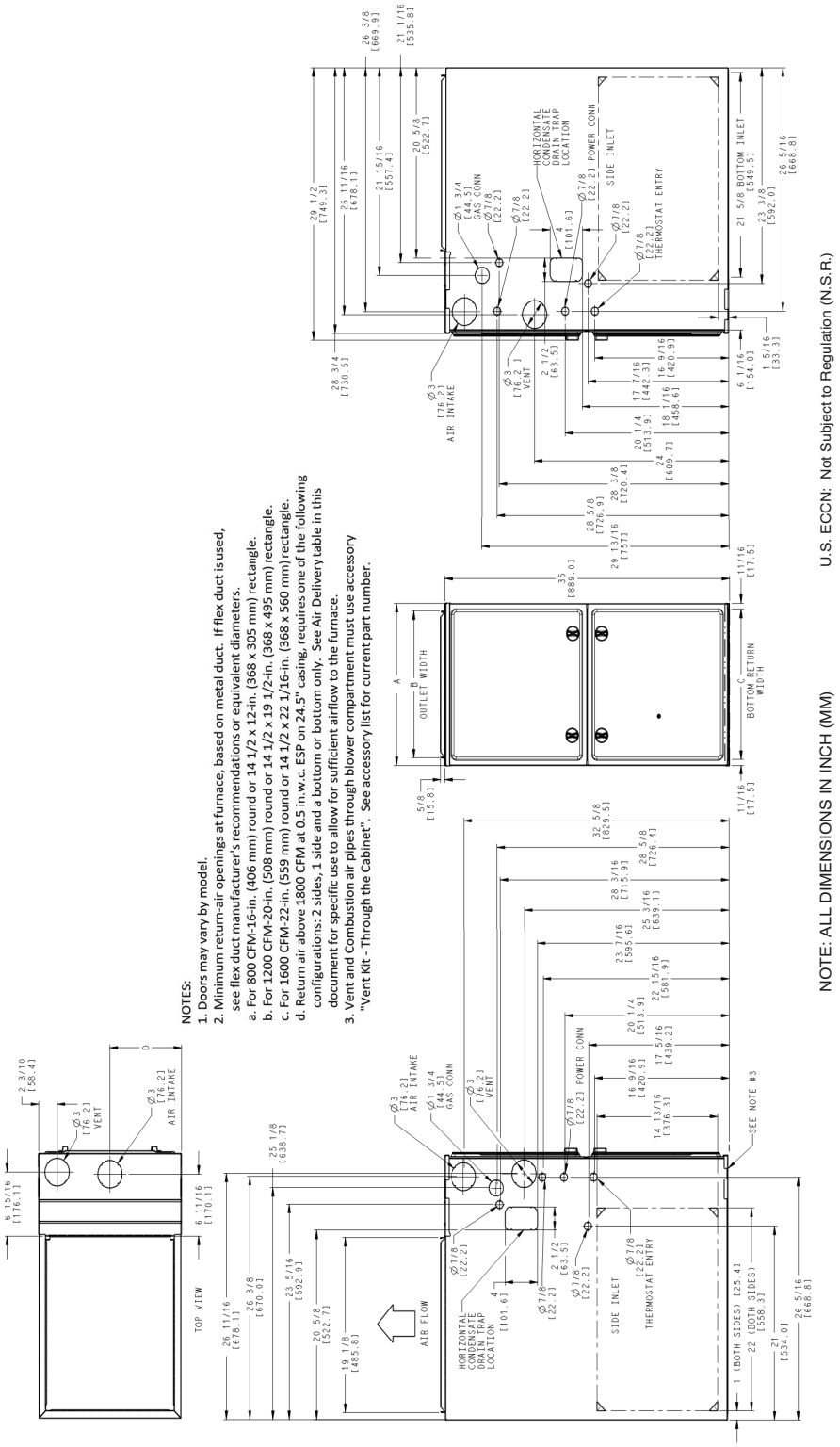

A200327

FURNACE SIZE	A	B	C	D	SHIP WT.
	CABINET WIDTH	OUTLET WIDTH	BOTTOM INLET WIDTH	AIR INTAKE	LB (KG)
F96CTN0601714	17-1/2 (445)	15-7/8 (403)	16 (406)	8-3/4 (222)	151.0 (68.5)
F96CTN0801714	17-1/2 (445)	15-7/8 (403)	16 (406)	8-3/4 (222)	152.5 (69.2)
F96CTN0802120	21 (533)	19-3/8 (492)	19-1/2 (495)	10-1/2 (267)	171.5 (77.8)
F96CTN1002122	21 (533)	19-3/8 (492)	19-1/2 (495)	10-1/2 (267)	179 (81.2)
F96CTN1202422	24-1/2 (622)	22-7/8 (581)	23 (584)	12-1/4 (311)	195 (88.4)

Manufacturer reserves the right to change, at any time, specifications and designs without notice and without obligations.

MODEL NUMBER IDENTIFICATION GUIDE

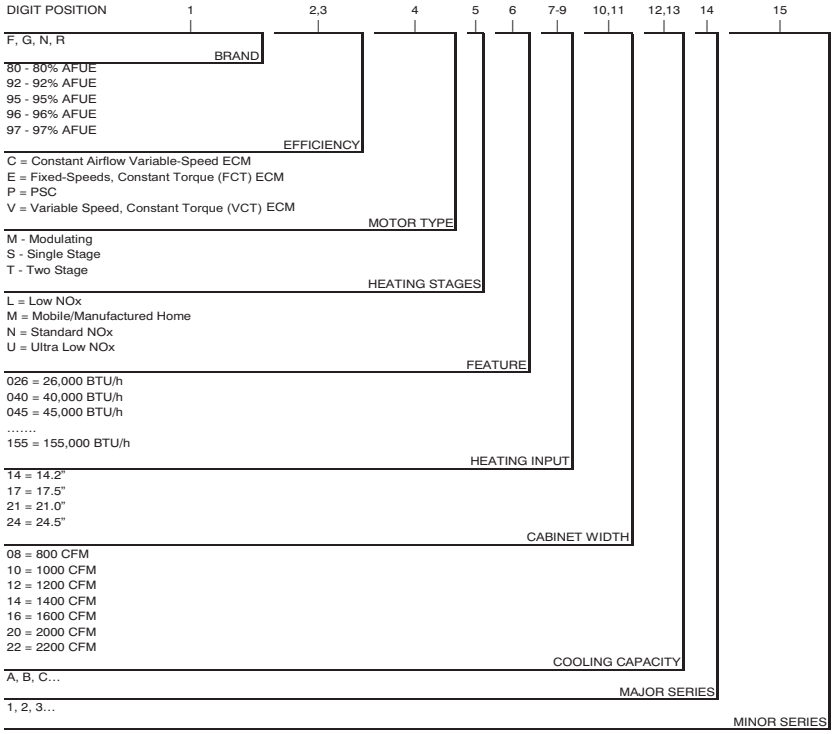

A190043

For California Residents:
For installation in SCAQMD only: This furnace does not meet the SCAQMD Rule 1111 14 ng/J NOx emission limit, and thus is subject to a mitigation fee of up to $450. This furnace is not eligible for the Clean Air Furnace Rebate Program: www.CleanAirFurnaceRebate.com

FURNACE COMPONENTS

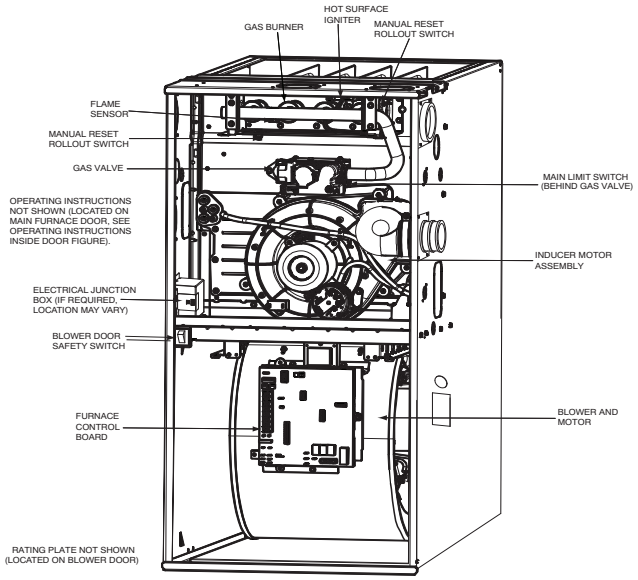

A190145

MINIMUM CLEARANCES TO COMBUSTIBLE MATERIALS FOR ALL UNITS

POSITION	CLEARANCE in.(mm)
REAR	0
FRONT (Combustion air openings in furnace and in structure)	1 (25)
Required for service	*24 (610)
All Sides of Supply Plenum	*1 (25)
Sides	0
Vent	0
Top of Furnace	1 (25)

*. Consult your local building codes.

PHYSICAL DATA

FURNACE SIZE			0601714	0801714	0802120	1002122	1202422
HEATING CAPACITY AND EFFICIENCY							
Input	High Heat	(BTUH)	60,000	80,000	80,000	100,000	120,000
	Low Heat	(BTUH)	39,000	52,000	52,000	65,000	78,000
Output	High Heat	(BTUH)	58,000	78,000	78,000	98,000	117,000
	Low Heat	(BTUH)	38,000	50,000	51,000	63,000	76,000
Certified Temperature Rise Range °F (ºC)			35 - 65 (19 - 36)	40 - 70 (22 - 39)	40 - 70 (22 - 39)	45 - 75 (25 - 42)	45 - 75 (25 - 42)
			30 - 60 (17 - 33)	30 - 60 (17 - 33)	30 - 60 (17 - 33)	30 - 60 (17 - 33)	30 - 60 (17 - 33)
AIRFLOW CAPACITY AND BLOWER DATA							
Rated External Static Pressure (in. w.c.)		Heating	0.12	0.15	0.15	0.20	0.20
		Cooling	0.50	0.50	0.50	0.50	0.50
Airflow Delivery @ Rated ESP (CFM)		High Heat	1055	1240	1345	1575	1820
		Low Heat	755	1008	1095	1385	1555
		Cooling	1280	1310	1945	2160	2135
Cooling Capacity (tons)		400 CFM/ton	3	3.50	4.50	5	5.50
		350 CFM/ton	3.50	4	5.50	6	6
Direct-Drive Motor Type			Electronically Commutated Motor (ECM)				
Direct-Drive Motor HP			1/2	1/2	1	1	1
Motor Full Load Amps			8.50	8.50	12.80	12.80	12.80
RPM Range			300 - 1300				
Speed Selections			Variable (Communicating)				
Blower Wheel Dia x Width		in.	11 x 8	11 x 8	11x10	11 x 10	11 x 11
Air Filtration System			Field Supplied Filter				
Filter Used for Certified Watt Data*			325531-40*				
ELECTRICAL DATA							
Input Voltage		Volts-Hertz-Phase	115-60-1				
Operating Voltage Range		Min-Max	104-127				
Maximum Input Amps		Amps	9.30	9.30	13.60	13.70	13.70
Unit Ampacity		Amps	12.60	12.60	17.90	18.00	18.00
Minimum Wire Size		AWG	14	14	12	12	12
Maximum Wire Length @ Minimum Wire Size		Feet	29	29	32	31	31
		(M)	(9.0)	(9.0)	(9.8)	(9.7)	(9.7)
Maximum Fuse/Ckt Bkr (Time-Delay Type Recommended)		Amps	15	15	20	20	20
Transformer Capacity (24vac output)			40 VA				
External Control Power Available		Heating	24.3 VA				
		Cooling	34.6 VA				
CONTROLS							
Gas Connection Size			1/2" - NPT				
Burners (Monoport)			3	4	4	5	6
Gas Valve (Redundant)		Manufacturer	White Rogers				
Minimum Inlet Gas pressure (in. wc)			4.50				
Maximum Inlet Gas pressure (in. wc)			13.60				
Manufactured (Mobile) Home Kit			Not approved for Modular (Mobile Home) use				
Ignition Device			Silicon Nitride				
Heating Blower Control (Heating Off-Delay)			Adjustable: 90, 120, 150, 180 seconds				
Cooling Blower Control (Time Delay Relay)			90 seconds				
Communication System			ION™ Communicating SYST0101CW				
Thermostat Connections			R, W/W1, W2 Y/Y2, Y1, G, Com 24V, DHUM				
Accessory Connections			EAC (115vac); HUM (24vac); 1-stg AC (via Y/Y2)				

*. See Accessory List for part numbers available.

DIP SWITCH DESCRIPTION

DIP SWITCH CONFIGURATION

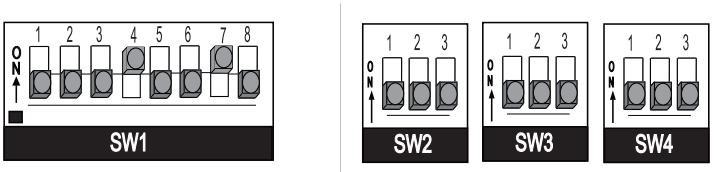

SW1

Switch	Description		Factory
1	**Status Code Recovery -** Turn ON to retrieve status codes.	See manual for use.	OFF
2	**Low Heat Only -** SW1 - 2 OFF allows two-stage operation SW1 - 2 ON for two-stage operation using two-stage TSTAT.	using single stage TSTAT (Adaptive Heat Mode).	OFF
3	**Not Used**		OFF
4	**Comfort/Efficiency Adjust -** Turn ON to decrease low- & high-heat airflow 15% for 90%+ models or 10% for 80%	heat airflow 20% for 90%+ models or 16% for 80% models models	ON
5	**CFM per Ton Adjust -** See Airflow Tables in manual for	desired settings. Also see SW4 - 3.	OFF
6	**Component Self Test -** Turn ON to initiate Component disconnected. Turn OFF when Self Test is completed.	Self Test for troubleshooting assistance when R TSTAT lead is	OFF
7 & 8	**Blower Off Delay -** See manual or unit wiring diagram for Factory default is 120 Seconds.	settings. Adjustable 90 - 180 seconds.	7 - ON 8 - OFF

SW2

Switch	Description		Factory
1 - 3	**A/C Setup Switches -** The Air Conditioning setup switch (two-stage units) airflow. See Cooling Air Delivery Tables in	selects desired cooling or high-stage cooling manual for specific switch settings.	ALL OFF

SW3

Switch	Description		Factory
1 - 3	**CF Setup Switches -** The Continuous Fan setup switch airflow. See Cooling Air Delivery Tables and Continuous Fan	selects desired CF and low-stage cooling (two-stage A/C units) Air Delivery Tables (when present) for specific switch settings.	ALL OFF

SW4

Switch	Description		Factory
1	**Future Use -** Switch should remain in OFF position.		OFF
2	**Not Used**		OFF
3	**CFM per Ton Adjust -** See Airflow Tables for desired	settings. Also SW1 - 5.	OFF

A190155

AIR DELIVERY - CFM

AIR DELIVERY - CFM (with filter)

Cooling[4] and Heating Air Delivery - CFM continued (Bottom Return[5] with Filter)

(SW1-5 and SW4-3 set to OFF, except as indicated. See notes 1 and 2.)

Unit Size: 0601714	Clg/CF Switch settings			External Static Pressure (ESP)									
Clg Switches	**SW2-3**	**SW2-2**	**SW2-1**	**0.1**	**0.2**	**0.3**	**0.4**	**0.5**	**0.6**	**0.7**	**0.8**	**0.9**	**1.0**
Clg Default:	OFF	OFF	OFF	1115	1120	1125	1120	1120	1115	1110	1100	1095	1085
CF Switches	**SW3-3**	**SW3-2**	**SW3-1**										
Low-Clg Default:	OFF	OFF	OFF	565	565	555	540	530	See note 4				
Cooling Airflow (SW2) Low-Cooling Airflow (SW3)	OFF	OFF	ON	565	565	555	540	530	See note 4				
	OFF	ON	OFF	695	710	715	710	705	700	695	685	680	675
	OFF	ON	ON	940	945	940	935	935	930	920	900	890	875
	ON	OFF	OFF	1115	1120	1125	1120	1120	1115	1110	1100	1095	1085
	ON	OFF	ON	1285	1290	1295	1295	1285	1250	1220	1185	1155	1120
	ON	ON	OFF	1400	1370	1340	1310	1280	1245	1215	1185	1150	1115
	ON	ON	ON	1400	1370	1340	1310	1280	1245	1215	1185	1150	1115
	Maximum Clg Airflow[2]			1400	1370	1340	1310	1280	1245	1215	1185	1150	1115
CF Switches	**SW3-3**	**SW3-2**	**SW3-1**										
Cont. Fan Default:	OFF	OFF	OFF	565	565	555	540	530	See note 4				
Continuous Fan Airflow (SW3)	OFF	OFF	ON	565	565	555	540	530	See note 4				
	OFF	ON	OFF	695	710	715	710	705	700	695	685	680	675
	OFF	ON	ON	940	945	940	935	935	930	920	900	890	875
	ON	OFF	OFF	1115	1120	1125	1120	1120	1115	1110	1100	1095	1085
	ON	OFF	ON	1115	1120	1125	1120	1120	1115	1110	1100	1095	1085
	ON	ON	OFF	1115	1120	1125	1120	1120	1115	1110	1100	1095	1085
	ON	ON	ON	1115	1120	1125	1120	1120	1115	1110	1100	1095	1085
Heating (SW1)	High Heat Airflow[3]			1055	1060	1065	1065	1055	1050	1040	1035	1025	1010
	Low Heat Airflow[3]			750	770	775	775	770	765	755	745	740	735

AIR DELIVERY - CFM (continued)

AIR DELIVERY - CFM (with filter)													
Cooling[4] and Heating Air Delivery - CFM continued (Bottom Return[5] with Filter)													
(SW1-5 and SW4-3 set to OFF, except as indicated. See notes 1 and 2.)													
Unit Size: 0801714	**Clg/CF Switch settings**			**External Static Pressure (ESP)**									
Clg Switches	**SW2-3**	**SW2-2**	**SW2-1**	**0.1**	**0.2**	**0.3**	**0.4**	**0.5**	**0.6**	**0.7**	**0.8**	**0.9**	**1.0**
Clg Default:	OFF	OFF	OFF	1085	1095	1095	1100	1100	1095	1090	1095	1085	1080
CF Switches	**SW3-3**	**SW3-2**	**SW3-1**										
Low-Clg Default:	OFF	OFF	OFF	550	550	545	535	520	See note 4				
Cooling Airflow (SW2) Low-Cooling Airflow (SW3)	OFF	OFF	ON	550	550	545	535	520	See note 4				
	OFF	ON	OFF	705	710	710	710	700	See note 4				
	OFF	ON	ON	885	900	910	910	910	905	900	895	885	875
	ON	OFF	OFF	1085	1095	1095	1100	1100	1095	1090	1095	1085	1080
	ON	OFF	ON	1255	1265	1265	1270	1275	1275	1255	1220	1190	1160
	ON	ON	OFF	1420	1410	1375	1345	1310	1280	1255	1220	1190	1160
	ON	ON	ON	1420	1410	1375	1345	1310	1280	1255	1220	1190	1160
	Maximum Clg Airflow[2]			1445	1410	1375	1345	1310	1275	1255	1220	1190	1160
CF Switches	**SW3-3**	**SW3-2**	**SW3-1**										
Cont. Fan Default:	OFF	OFF	OFF	550	550	545	535	520	See note 4				
Continuous Fan Airflow (SW3)	OFF	OFF	ON	430	410	390	370	350	See note 4				
	OFF	ON	OFF	485	475	455	440	420	See note 4				
	OFF	ON	ON	550	550	545	535	520	See note 4				
	ON	OFF	OFF	550	550	545	535	520	See note 4				
	ON	OFF	ON	550	550	545	535	520	See note 4				
	ON	ON	OFF	550	550	545	535	520	See note 4				
	ON	ON	ON	550	550	545	535	520	See note 4				
Heating (SW1)	High Heat Airflow[3]			1235	1245	1250	1255	1255	1260	1255	1220	1190	1160
	Low Heat Airflow[3]			1005	1010	1015	1015	1020	1000	995	990	980	970
Unit size: 0802120	**Clg/CF Switch settings**			**External Static Pressure (ESP)**									
Clg Switches	**SW2-3**	**SW2-2**	**SW2-1**	**0.1**	**0.2**	**0.3**	**0.4**	**0.5**	**0.6**	**0.7**	**0.8**	**0.9**	**1.0**
Clg Default:	OFF	OFF	OFF	1745	1755	1755	1760	1755	1750	1745	1725	1705	1685
CF Switches	**SW3-3**	**SW3-2**	**SW3-1**										
Low-Clg Default:	OFF	OFF	OFF	700	710	750	725	750	See note 4				
Cooling Airflow (SW2) Low-Cooling Airflow (SW3)	OFF	OFF	ON	700	710	750	725	750	See note 4				
	OFF	ON	OFF	830	860	870	890	960	See note 4				
	OFF	ON	ON	1045	1045	1060	1070	1070	1070	1095	1090	1080	1070
	ON	OFF	OFF	1215	1220	1245	1240	1235	1235	1225	1220	1235	1235
	ON	OFF	ON	1370	1370	1390	1390	1400	1395	1400	1390	1390	1385
	ON	ON	OFF	1745	1755	1755	1760	1755	1750	1745	1725	1705	1685
	ON	ON	ON	1745	1755	1755	1760	1755	1750	1745	1725	1705	1685
	Maximum Clg Airflow[2]			1920	1920	1945	1945	1945	1960	1950	1940	1915	1900
CF Switches	**SW3-3**	**SW3-2**	**SW3-1**										
Cont. Fan Default:	OFF	OFF	OFF	700	710	750	725	750	See note 4				
Continuous Fan Airflow (SW3)	OFF	OFF	ON	700	710	750	725	750	See note 4				
	OFF	ON	OFF	830	860	870	890	960	See note 4				
	OFF	ON	ON	1045	1045	1060	1070	1070	1070	1095	1090	1080	1070
	ON	OFF	OFF	1215	1220	1245	1240	1235	1235	1225	1220	1235	1235
	ON	OFF	ON	1215	1220	1245	1240	1235	1235	1225	1220	1235	1235
	ON	ON	OFF	1215	1220	1245	1240	1235	1235	1225	1220	1235	1235
	ON	ON	ON	1215	1220	1245	1240	1235	1235	1225	1220	1235	1235
Heating (SW1)	High Heat Airflow[3]			1340	1355	1370	1385	1380	1385	1400	1400	1385	1380
	Low Heat Airflow[3]			1080	1115	1115	1120	1125	1135	1125	1120	1125	1110

AIR DELIVERY - CFM (continued)

AIR DELIVERY - CFM (with filter)													
Cooling[4] and Heating Air Delivery - CFM continued (Bottom Return[5] with Filter)													
(SW1-5 and SW4-3 set to OFF, except as indicated. See notes 1 and 2.)													
Unit size: 1002122	**Clg/CF Switch settings**			**External Static Pressure (ESP)**									
Clg Switches	**SW2-3**	**SW2-2**	**SW2-1**	**0.1**	**0.2**	**0.3**	**0.4**	**0.5**	**0.6**	**0.7**	**0.8**	**0.9**	**1.0**
Clg Default:	OFF	OFF	OFF	1820	1825	1840	1845	1840	1835	1825	1805	1780	1770
CF Switches	**SW3-3**	**SW3-2**	**SW3-1**										
Low-Clg Default:	OFF	OFF	OFF	750	740	745	730	715	See note 4				
Cooling Airflow (SW2) Low-Cooling Airflow (SW3)	OFF	OFF	ON	750	740	745	730	715	See note 4				
	OFF	ON	OFF	900	900	915	910	905	See note 4				
	OFF	ON	ON	1070	1075	1095	1095	1090	1085	1095	1080	1065	1070
	ON	OFF	OFF	1280	1285	1305	1305	1310	1305	1295	1300	1290	1285
	ON	OFF	ON	1440	1445	1465	1465	1470	1485	1480	1485	1475	1460
	ON	ON	OFF	1820	1825	1840	1845	1840	1835	1825	1805	1780	1770
	ON	ON	ON	2135	2140	2140	2135	2140	2130	2115	2100	2070	2015
	Maximum Clg Airflow[2]			2160	2165	2175	2170	2160	2150	2135	2120	2065	2020
CF Switches	**SW3-3**	**SW3-2**	**SW3-1**										
Cont. Fan Default:	OFF	OFF	OFF	750	740	745	730	715	See note 4				
Continuous Fan Airflow (SW3)	OFF	OFF	ON	750	740	745	730	715	See note 4				
	OFF	ON	OFF	900	900	915	910	905	See note 4				
	OFF	ON	ON	1070	1075	1095	1095	1090	1085	1095	1080	1065	1070
	ON	OFF	OFF	1070	1075	1095	1095	1090	1085	1095	1080	1065	1070
	ON	OFF	ON	1070	1075	1095	1095	1090	1085	1095	1080	1065	1070
	ON	ON	OFF	1070	1075	1095	1095	1090	1085	1095	1080	1065	1070
	ON	ON	ON	1070	1075	1095	1095	1090	1085	1095	1080	1065	1070
Heating (SW1)	High Heat Airflow[3]			1570	1575	1595	1595	1600	1605	1600	1600	1590	1575
	Low Heat Airflow[3]			1365	1385	1395	1395	1395	1400	1400	1405	1395	1380
Unit size: 1202422	**Clg/CF Switch settings**			**External Static Pressure (ESP)**									
Clg Switches	**SW2-3**	**SW2-2**	**SW2-1**	**0.1**	**0.2**	**0.3**	**0.4**	**0.5**	**0.6**	**0.7**	**0.8**	**0.9**	**1.0**
Clg Default:	OFF	OFF	OFF	1845	1840	1835	1835	1825	1820	1810	1800	1785	1775
CF Switches	**SW3-3**	**SW3-2**	**SW3-1**										
Low-Clg Default:	OFF	OFF	OFF	895	915	915	915	915	See note 4				
Cooling Airflow (SW2) Low-Cooling Airflow (SW3)	OFF	OFF	ON	715	725	720	710	705	See note 4				
	OFF	ON	OFF	895	915	915	915	915	See note 4				
	OFF	ON	ON	1070	1090	1105	1115	1115	1110	1115	1120	1120	1110
	ON	OFF	OFF	1240	1265	1280	1295	1295	1305	1305	1305	1315	1315
	ON	OFF	ON	1520	1520	1515	1505	1495	1490	1480	1465	1455	1445
	ON	ON	OFF	1845	1840	1835	1835	1825	1820	1810	1800	1785	1775
	ON	ON	ON	2150	2145	2140	2145	2135	2130	2115	2100	2065	1985
	Maximum Clg Airflow[2]			2150	2145	2140	2145	2135	2130	2115	2100	2065	1985
CF Switches	**SW3-3**	**SW3-2**	**SW3-1**										
Cont. Fan Default:	OFF	OFF	OFF	895	915	915	915	915	See note 4				
Continuous Fan Airflow (SW3)	OFF	OFF	ON	715	725	720	710	705	See note 4				
	OFF	ON	OFF	805	820	815	810	810	See note 4				
	OFF	ON	ON	895	915	915	915	915	See note 4				
	ON	OFF	OFF	895	915	915	915	915	See note 4				
	ON	OFF	ON	895	915	915	915	915	See note 4				
	ON	ON	OFF	895	915	915	915	915	See note 4				
	ON	ON	ON	895	915	915	915	915	See note 4				
Heating (SW1)	High Heat Airflow[3]			1825	1820	1815	1800	1800	1795	1785	1775	1760	1745
	Low Heat Airflow[3]			1555	1555	1550	1550	1545	1525	1520	1505	1495	1485

NOTES following table.

1. Nominal 350 CFM/ton cooling airflow is delivered with SW1-5 and SW4-3 set to OFF.
   Set SW1-5 to ON for nominal 400 CFM/ton (+15% airflow).
   Set SW4-3 to ON for nominal 325 CFM/ton (-7% airflow).
   Set both SW1-5 and SW4-3 to ON for nominal 370 CFM/ton (+7% airflow).
   This applies to Cooling and Low-Cooling airflows, but does not affect continuous fan airflows.
2. The above adjustments in airflow are subject to motor horsepower range/capacity
3. Maximum cooling airflow is achieved when switches SW2-1, SW2-2, SW2-3 and SW1-5 are set to ON, and SW4-3 is set to OFF.
4. All heating CFM's are when comfort/efficiency adjustment switch (SW1-4) is set to OFF.
5. Ductwork must be sized for high-heating CFM within the operational range of ESP. Operation within the blank areas of the chart is not recommended because high-heat operation will be above 1.0 ESP.
6. All airflows on 21" (533 mm) casing size furnaces are 5% less on side return only installations.

ACCESSORIES

PART NUMBER	COMPONENT NAME	DESCRIPTION	0601714	0801714	0802120	1002122	1202422
NAHB001101CT	EXTERNAL TRAP KIT	CONDENSATE TRAP	X	X	X	X	X
NAHA00110DA	DRAIN ACCESSORY	1/2” CPVC to 3/4” PVC (10 PACK)	X	X	X	X	X
NAHA002CV	VENT TERMINATION KIT	2” CONCENTRIC VENT	X	X	X	X	-
NAHA001CV		3” CONCENTRIC VENT	X	X	X	X	X
NAHA00101VC	INTERNAL VENT KIT	THROUGH THE CABINET	X	X	X	X	X
NAHA00301VT	DIRECT VENT TERMINATION KIT	2” BRACKET	X	X	X	X	-
NAHA00401VT		3” BRACKET	X	X	X	X	X
NAHA00101CK	INLET AIR PIPE COUPLING	COUPLING FOR POLYPROPYLENE VENT SYSTEMS	X	X	X	X	X
NAHA00101HV	HORIZONTAL INSTALLATION KIT	TRAP GROMMET (direct Vent application only)	X	X	X	X	X
NAHA00101HH	FREEZE PROTECT KIT	CONDENSATE DRAIN LINE - Tape	X	X	X	X	X
NAHA00201HH	CONDENSATE FREEZE PROTECT KIT	CONDENSATE TRAP WITH HEAT PAD	X	X	X	X	X
NAHA01101SB	FLOOR BASE KIT	COMBUSTIBLE FLOOR	X	X	X	X	X
AGAGC9NPS01B	GAS CONVERSION KIT	NATURAL TO PROPANE	X	X	X	X	X
AGAGC9PNS01B		PROPANE TO NATURAL	X	X	X	X	X
1188594*	GAS VALVE TOWER PORT ADAPTER KIT	ADAPTER FOR GAS VALVE	X	X	X	X	X
325531-402†	WASHABLE FILTER	3/4” X 16” x 25” WASHABLE FILTER	X	X	-	-	-
325531-403†		3/4” X 20” x 25” WASHABLE FILTER	-	-	X	X	-
325531-404†		3/4” X 24” x 25” WASHABLE FILTER	-	-	-	-	X
FHG1625-2†	ELTERNAL BOTTOM FILTER RACK	16” x 25” W/O FILTER	X	X	-	-	-
FHG2025-2†		20” x 25” W/O FILTER	-	-	X	X	-
FHG2424-2†		24-1/2” x 24” W/O FILTER	-	-	-	-	X
NAHB00101CA	COIL ADAPTER KIT	WITH NO OFFSET	X	X	X	X	X
NAHB00201CA		WITH SINGLE OFFSET	X	X	X	X	X
NAHB00301CA		WITH DOUBLE OFFSET	X	X	X	X	X
NAHA01701RA	RETURN AIR KIT	17-1/2” wide	X	X	-	-	-
NAHA02101RA		21” wide	-	-	X	X	
NAHA02401RA		24-1/2” wide	-	-	-	-	X
SYST0101CW	ION CONTROL SYSTEM	SELF-CONFIGURING COMMUNICATING CONTROL	X	X	X	X	X
NAHA001NK	CONDENSATE NEUTRALIZER KIT	NEUTRALIZES CONDENSATE	X	X	X	X	X

*. Factory authorized and filed installed. Gas conversion kits are CSA recognized.
†. Order through FAST Parts
X = Accessory available

ORIFICES

Part Number	Gas Type	Orifice Size
1185612	Natural	42
1176928	Natural	43
1185574	Natural	44
1177213	Natural	45

Part Number	Gas Type	Orifice Size
1183809	Natural	46
1185613	Natural	47
1185614	Natural	48

Part Number	Gas Type	Orifice Size
1184256	Propane	54
1185615	Propane	55
1185616	Propane	56
1185617	Propane	1.25 mm
1185618	Propane	1.30 mm

© 2021 Carrier. All rights reserved.

Manufacturer reserves the right to change, at any time, specifications and designs without notice and without obligations.