Arcoaire®
Air Conditioning & Heating

N8MSN, N8MSL

PS 80

Product Specifications

80% Single Stage Heating Furnace

EASIER TO SELL

- 80% AFUE
- Flame roll–out sensors standard
- Category I venting
- Blocked vent switch
- Louvered door
- 24 VAC and 115 VAC humidifier terminal
- Electronic air cleaner terminal
- Twinning furnaces of same heating and cooling sizes with approved kit
- N8MSL California NOx approved
- Certified to leak 2 percent or less of nominal air conditioning CFM delivered when pressurized to 1-inch Water Gauge with all present air inlets, air outlets, and condensate drain port(s) sealed

TOUGHER

- PSC blower motor
- Adjustable heating blower OFF delay
- Factory set blower ON delay
- RPJ aluminized steel heat exchanger
- High temperature limit control prevents overheating
- Direct ignition with Silicon Nitride ignitor
- One piece prepainted steel cabinet

QUIETER

- In–shot burners

EASIER TO INSTALL AND SERVICE

- 33 1/3” (847mm) high, for ease of installation
- Innovative knobs for easy door removal and secure attachment
- Factory shipped for natural gas, with propane gas conversion kits available
- Four position – upflow/downflow/horizontal (left/right) installation
- Three position inducer elbow capability
- Through the casing flue pipe for counterflow applications
- Common venting with other Category I appliances
- Masonry chimney adapter available
- Self diagnostics
- Slide out blower assembly

Illustrations and photographs are only representative.
Some product models may vary.

⚠ WARNING

This furnace is not designed for use in mobile homes, trailers, or recreational vehicles. Such use could result in property damage and/or death.

AHRI CERTIFIED™ www.ahridirectory.org

Use of the AHRI Certified TM Mark indicates a manufacturer's participation in the program. For verification of certification for individual products, go to www.ahridirectory.org .

DESIGN CERTIFIED

Certified System ISO 9001 QMI-SAI Global

WARRANTY *

- 20 year heat exchanger limited warranty
- 5 year parts limited warranty

– With timely registration, an additional 5 year parts limited warranty

* For owner occupied, residential applications only. See warranty certificate for complete details and restrictions, including warranty coverage for other applications.

Model	Size	Input (MBTUH)	Efficiency AFUE	Cooling Capacity CFM range @ .5 in. w.c. (125 Pa)	Dimensions H x W x D Inches (Millimeters)	Shipping Wt. Lbs(Kg)
N8MSN N8MSL	0451408A	44,000	80%	580-835	33-1/3 x 14-3/16 x 29 (847 x 360 x 737)	107 (49)
	0451412A	44,000	80%	1040-1160	33-1/3 x 14-3/16 x 29 (847 x 360 x 737)	107 (49)
	0701408A	66,000	80%	595-870	33-1/3 x 14-3/16 x 29 (847 x 360 x 737)	111 (50)
	0701412A	66,000	80%	1050-1200	33-1/3 x 14-3/16 x 29 (847 x 360 x 737)	115 (52)
	0701716A	66,000	80%	1240-1505	33-1/3 x 17-1/2 x 29 (847 x 445 x 737)	126 (57)
	0901714B	88,000	80%	1065-1385	33-1/3 x 17-1/2 x 29 (847 x 445 x 737)	127 (58)
	0902116A	88,000	80%	1375-1635	33-1/3 x 21 x 29 (847 x 533 x 737)	140 (64)
	0902120A	88,000	80%	1715–2025	33-1/3 x 21 x 29 (847 x 533 x 737)	146 (66)
	1101712A	110,000	80%	1155–1355	33-1/3 x 17-1/2 x 29 (847 x 445 x 737)	135 (61)
	1102116A	110,000	80%	1310-1655	33-1/3 x 21 x 29 (847 x 533 x 737)	146 (66)
	1102122A	110,000	80%	1650-2205	33-1/3 x 21 x 29 (847 x 533 x 737)	152 (69)
	1352116A	132,000	80%	1380-1710	33-1/3 x 21 x 29 (847 x 533 x 737)	149 (68)
	1352422A	132,000	80%	1705-2160	33-1/3 x 24-1/2 x 29 (847 x 622 x 737)	163 (74)
	1552420A	154,000	80%	1695-2215	33-1/3 x 24-1/2 x 29 (847 x 622 x 737)	170 (77)

MODEL NUMBER IDENTIFICATION GUIDE

DIGIT POSITION	1	2	3	4	5	6,7,8	9,10	11,12	13	14
	N	**8**	**M**	**S**	**L**	**045**	**14**	**12**	**A**	**1**

N = Entry

8 = 80% AFUE — **EFFICIENCY**

M = Multiposition — **POSITION**

V = Variable Speed Blower Motor – ECM
X = ECM Blower Motor
S = Single–stage
T = Two–stage — **TYPE**

N = Standard
L = Low NOx — **FEATURE**

045 = 44,000 BTU/hr
070 = 66,000 BTU/hr
090 = 88,000 BTU/hr
110 = 110,000 BTU/hr
135 = 132,000 BTU/hr
155 = 154,000 BTU/hr — **HEAT INPUT**

14 = 14–3/16”
17 = 17–1/2”
21 = 21”
24 = 24–1/2” — **CABINET WIDTH**

08 = 800 CFM
12 = 1200 CFM
14 = 1400 CFM
16 = 1600 CFM
20 = 2000 CFM
22 = 2200 CFM — **NOMINAL MAXIMUM COOLING AIRFLOW @ .5 IN. W.C.**

SALES (MAJOR) REVISION DIGIT

ENGINEERING (MINOR) REVISION DIGIT

ECM–Electronically Commutated Motor

ACCESSORIES PART NUMBER IDENTIFICATION GUIDE

DIGIT POSITION	1	2	3	4	5, 6, 7	8, 9	10, 11
	N	**A**	**H**	**A**	**001**	**01**	**DH**

N = Non–Branded — **BRANDING**

A = Accessory — **PRODUCT GROUP**

H = Heating — **KIT USAGE**

A = Original
B = 2nd Generation — **MAJOR SERIES**

Product Identifier Number

Package Quantity

Type of Kit (Example: DH = Draft Hood – Chimney Adapter)

PHYSICAL DATA

NATURAL GAS		0451408A	0451412A	0701408A	0701412A	0701716A	0901714B	0902116A
OUTPUT CAPACITY BTUH* (Nonweatherized ICS) †	N8MSL Upflow; All N8MSN	35,000	36,000	53,000	54,000	53,000	71,000	71,000
	N8MSL Downflow/ Horizontal	34,000	34,000	51,000	51,000	51,000	68,000	68,000
INPUT BTUH*	N8MSL Upflow; All N8MSN	44,000	44,000	66,000	66,000	66,000	88,000	88,000
	N8MSL Downflow/ Horizontal	42,000	42,000	63,000	63,000	63,000	84,000	84,000
AFUE%*	Nonweatherized ICS	80.0	80.0	80.0	80.0	80.0	80.0	80.0
TRANSFORMER (24 volt)		40 VA						
CERTIFIED TEMP RISE RANGE °F (°C)		30–60 (17–33)	20–50 (11–28)	40–70 (22–39)	30–60 (17–33)	25–55 (14–30)	40–70 (22–39)	30–60 (17–33)
CERTIFIED EXT STATIC PRESSURE	Heating	0.10	0.10	0.12	0.12	0.12	0.15	0.15
	Cooling	0.50	0.50	0.50	0.50	0.50	0.50	0.50
AIRFLOW CFM‡	Heating	865	1250	720	1195	1350	1345	1505
	Cooling	835	1160	870	1200	1505	1385	1635
LIMIT CONTROL		SPST						
HEATING BLOWER CONTROL		Solid-State Time Operation						
BURNERS (Monoport)		2	2	3	3	3	4	4
GAS CONNECTION SIZE		1/2 inch NPT						
GAS VALVE (Redundant) Manufacturer		White-Rodgers						
Minimum Inlet Pressure (in. w.c.)		4.5 (Natural Gas)						
Maximum Inlet Pressure (in. w.c.)		13.6 (Natural Gas)						
IGNITION DEVICE		Hot Surface						
COOLING CAPACITY CFM range (.5 in. w.c.)		580–835	1040–1160	595–870	1050–1200	1240–1505	1065–1385	1375–1635

NATURAL GAS		0902120A	1101712A	1102116A	1102122A	1352116A	1352422A	1552420A
OUTPUT CAPACITY BTUH* (Nonweatherized ICS) †	N8MSL Upflow; All N8MSN	71,000	89,000	89,000	89,000	107,000	107,000	125,000
	N8MSL Downflow/ Horizontal	68,000	85,000	85,000	85,000	102,000	102,000	119,000
INPUT BTUH*	N8MSL Upflow; All N8MSN	88,000	110,000	110,000	110,000	132,000	132,000	154,000
	N8MSL Downflow/ Horizontal	84,000	105,000	105,000	105,000	126,000	126,000	147,000
AFUE%*	Nonweatherized ICS	80.0	80.0	80.0	80.0	80.0	80.0	80.0
TRANSFORMER (24 volt)		40 VA						
CERTIFIED TEMP RISE RANGE °F (°C)		25–55 (14–30)	50–80 (28–44)	40–70 (22–39)	30–60 (17–33)	50–80 (28–44)	40–70 (22–39)	45–75 (25–41)
CERTIFIED EXT STATIC PRESSURE	Heating	0.15	0.20	0.20	0.20	0.20	0.20	0.20
	Cooling	0.50	0.50	0.50	0.50	0.50	0.50	0.50
AIRFLOW CFM‡	Heating	1900	1295	1515	1840	1480	1830	1790
	Cooling	2025	1355	1655	2160	1710	2085	2215
LIMIT CONTROL		SPST						
HEATING BLOWER CONTROL		Solid-State Time Operation						
BURNERS (Monoport)		4	5	5	5	6	6	7
GAS CONNECTION SIZE		1/2 inch NPT						
GAS VALVE (Redundant) Manufacturer		White-Rodgers						
Minimum Inlet Pressure (in. w.c.)		4.5 (Natural Gas)						
Maximum Inlet Pressure (in. w.c.)		13.6 (Natural Gas)						
IGNITION DEVICE		Hot Surface						
COOLING CAPACITY CFM range (.5 in. w.c.)		1715–2025	1155–1355	1310–1655	1650–2205	1380–1710	1705–2160	1695–2215

* Gas input ratings are certified for elevations to 2000 ft. (610 M). In USA, for elevations above 2000 ft. (610 M), reduce ratings 4 percent for each 1000 ft. (305 M) above sea level. Refer to National Fuel Gas Code NFPA 54/ANSI Z223.1—2009 Table F.4 or furnace Installation Instructions.

† Capacity in accordance with U.S. Government DOE test procedures.

‡ Airflow shown is for bottom only return—air supply in comfort mode (as shipped). For air delivery above 1800 CFM, see Air Delivery Table for other options. A filter is required for each return-air supply.

ICS — Isolated Combustion System

ELECTRICAL DATA

FURNACE SIZE	VOLTS–HERTZ–PHASE	OPERATING VOLTAGE RANGE		MAXIMUM UNIT AMPS	UNIT AMPACITY#	MAXIMUM WIRE LENGTH FT. (M)‡	MAXIMUM FUSE OR CKT BKR AMPS†	MINIMUM WIRE GAUGE
		Maximum*	Minimum*					
0451408A	115–60–1	127	104	5.2	7.26	49 (15)	15	14
0451412A	115–60–1	127	104	7.2	9.79	37 (12)	15	14
0701408A	115–60–1	127	104	5.1	7.14	51 (16)	15	14
0701412A	115–60–1	127	104	7.2	9.72	38 (12)	15	14
0701716A	115–60–1	127	104	9.5	12.60	29 (9)	15	14
0901714B	115–60–1	127	104	8.2	10.83	34 (10)	15	14
0902116A	115–60–1	127	104	10.0	13.09	28 (9)	15	14
0902120A	115–60–1	127	104	14.1	18.20	31 (9)	20	12
1101712A	115–60–1	127	104	8.6	11.27	32 (10)	15	14
1102116A	115–60–1	127	104	10.2	13.34	27 (9)	15	14
1102122A	115–60–1	127	104	15.1	19.42	29 (8)	20	12
1352116A	115–60–1	127	104	10.5	13.63	27 (8)	15	14
1352422A	115–60–1	127	104	14.5	18.72	30 (9)	20	12
1552420A	115–60–1	127	104	15.4	19.83	29 (9)	20	12

* Permissible limits of the voltage range at which the unit operates satisfactorily.
\# Unit ampacity = 125 percent of largest operating component's full load amps plus 100 percent of all other potential operating components' (EAC, humidifier, etc.) full load amps.
† Time–delay type is recommended.
‡ Length shown is as measured 1 way along wire path between unit and service panel for maximum 2 percent voltage drop.

DIMENSIONS

FURNACE SIZE	A CABINET WIDTH IN (mm)	B OUTLET WIDTH IN (mm)	C TOP AND BOTTOM FLUE COLLAR IN (mm)	D BOTTOM WIDTH IN (mm)	VENT CONNECTION SIZE IN (mm)	SHIP WT LB (KG)
0451408	14–3/16 (360)	12–9/16 (319)	9–5/16 (237)	12–11/16 (322)	4 (102)	104 (47)
0451412	14–3/16 (360)	12–9/16 (319)	9–5/16 (237)	12–11/16 (322)	4 (102)	107 (49)
0701408	14–3/16 (360)	12–9/16 (319)	9–5/16 (237)	12–11/16 (322)	4 (102)	111 (50)
0701412	14–3/16 (360)	12–9/16 (319)	9–5/16 (237)	12–11/16 (322)	4 (102)	115 (52)
0701716	17–1/2 (445)	15–7/8 (403)	11–9/16 (294)	16–1/8 (406)	4 (102)	126 (57)
0901714	17–1/2 (445)	15–7/8 (403)	11–9/16 (294)	16–1/8 (406)	4 (102)	127 (58)
0902116	21 (533)	19–3/8 (492)	13–5/16 (338)	19–1/2 (495)	4 (102)	140 (64)
0902120	21 (533)	19–3/8 (492)	13–5/16 (338)	19–1/2 (495)	4 (102)	146 (66)
1101712	17–1/2 (445)	15–7/8 (403)	11–9/16 (294)	16–1/8 (406)	4 (102)	135 (61)
1102116	21 (533)	19–3/8 (492)	13–5/16 (338)	19–1/2 (495)	4 (102)	146 (66)
1102122	21 (533)	19–3/8 (492)	13–5/16 (338)	19–1/2 (495)	4 (102)	152 (69)
1352116	21 (533)	19–3/8 (492)	13–5/16 (338)	19–1/2 (495)	4 (102)*	149 (68)
1352422	24–1/2 (622)	22–7/8 (581)	15–1/16 (383)	23 (584)	4 (102)*	163 (74)
1552420	24–1/2 (622)	22–7/8 (581)	15–1/16 (383)	23 (584)	4 (102)*	170 (77)

* 135 Btu/h and 155 Btu/h size furnaces require a 5 or 6–in. (127 or 152 mm) vent. Use a vent adapter between furnace and vent stack. See Installation Instructions for complete installation requirements.

UNIT DIMENSIONS

NOTES:
1. Doors may vary by model.
2. Two additional 7/8-in. (22 mm) diameter holes are located in the top plate.
3. Minimum return-air openings at furnace, based on metal duct. If flex duct is used, see flex duct manufacturer's recommendations for equivalent diameters.
   a. For 800 CFM-16-in. (406 mm) round or 14 1/2 x 12-in. (368 x 305 mm) rectangle.
   b. For 1200 CFM-20-in. (508 mm) round or 14 1/2 x 19 1/2-in. (368 x 495 mm) rectangle.
   c. For 1600 CFM-22-in. (559 mm) round or 14 1/2 x 22 1/16-in. (368 x 560mm) rectangle.
   d. Return air above 1800 CFM may require one of the following configurations:
      2 sides, 1 side and a bottom or bottom only for return air. See Air Delivery table in this document for specific use to allow for sufficient airflow to the furnace.

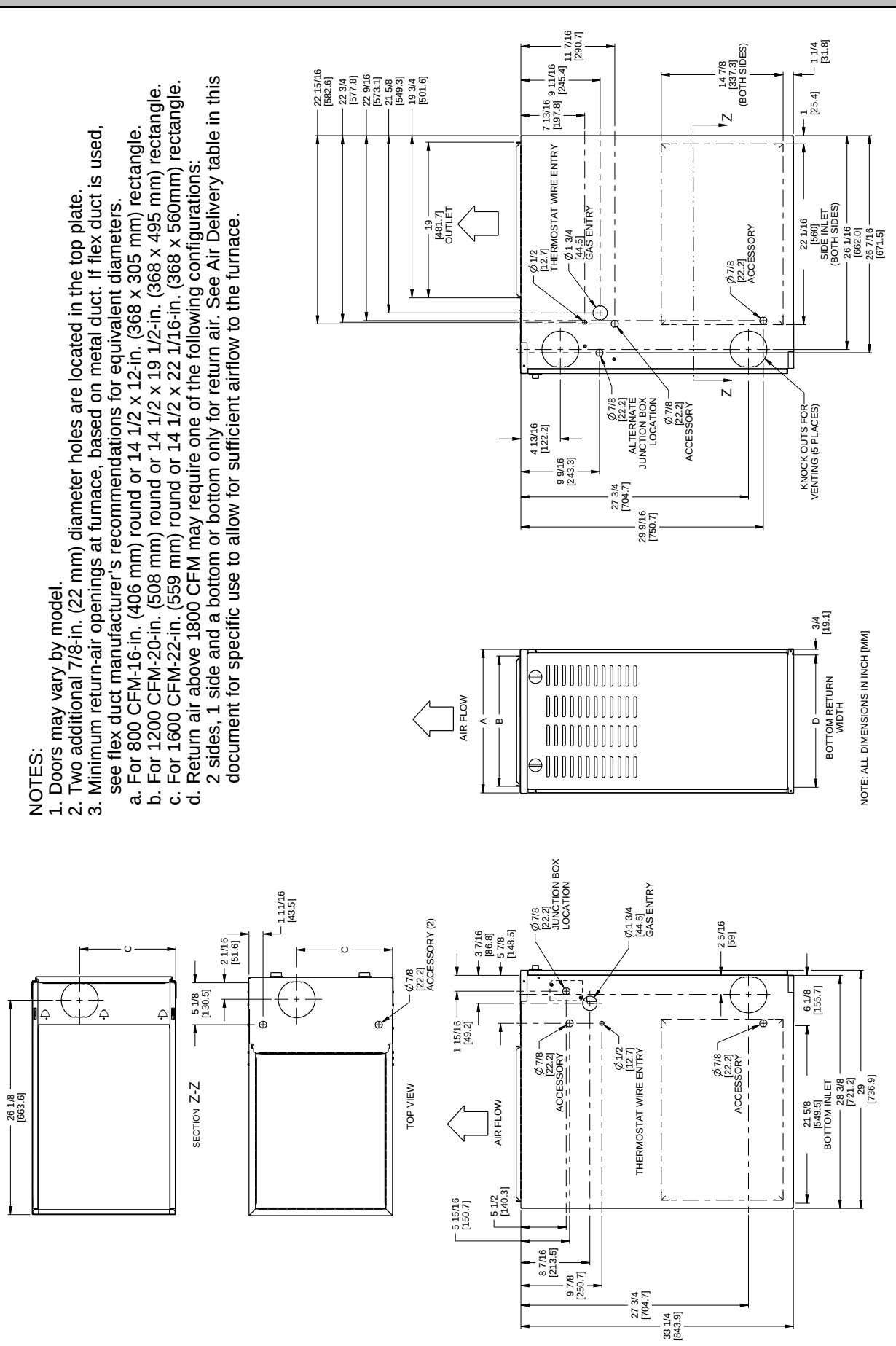

SD4963–4

DOWNFLOW VENT CONFIGURATIONS

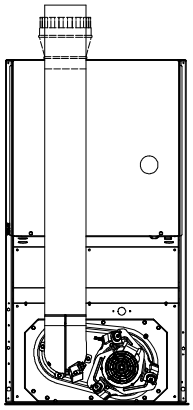

SEE NOTES: 1,2,4,5,7,8,9 A02061

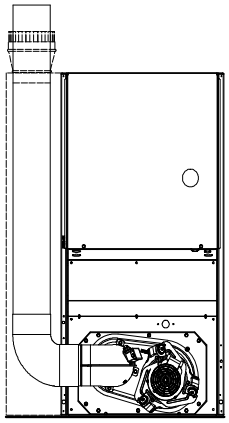

SEE NOTES: 1,2,4,5,6,7,8,9 A02062

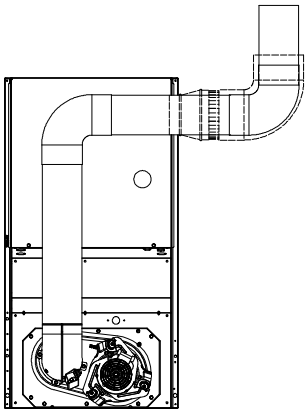

SEE NOTES: 1,2,3,4,5,7,8,9 A02063

DOWNFLOW CONTINUTED

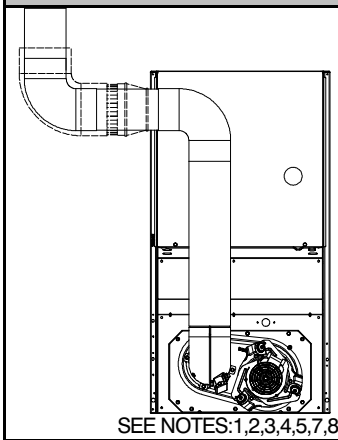

SEE NOTES:1,2,3,4,5,7,8,9 A02060

UPFLOW VENT CONFIGURATIONS

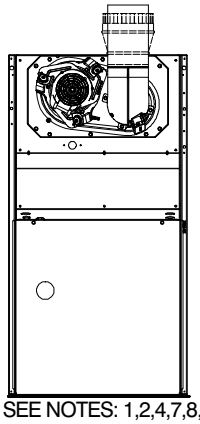

SEE NOTES: 1,2,4,7,8,9 A02058

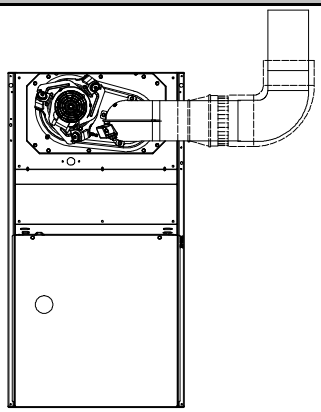

SEE NOTES: 1,2,3,4,7,8,9 A02059

HORIZONTAL RIGHT VENT CONFIGURATIONS

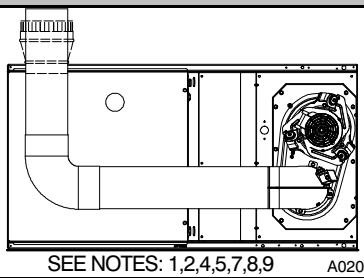

SEE NOTES: 1,2,4,5,7,8,9 A02070

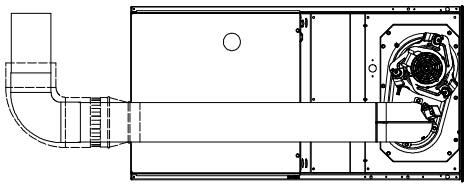

SEE NOTES: 1,2,4,5,7,8,9 A02068

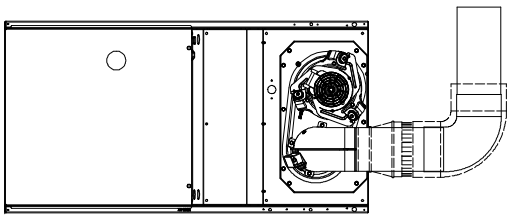

SEE NOTES: 1,2,4,7,8,9 A02069

HORIZONTAL LEFT VENT CONFIGURATIONS

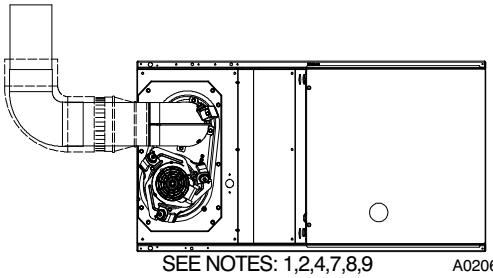

SEE NOTES: 1,2,4,7,8,9 A02064

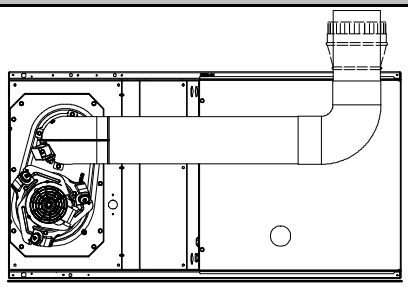

SEE NOTES: 1,2,4,5,7,8,9 A02065

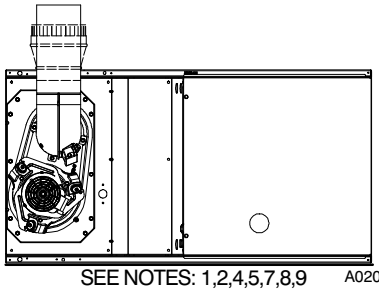

SEE NOTES: 1,2,4,5,7,8,9 A02066

HORIZONTAL LEFT VENT CONFIGURATIONS

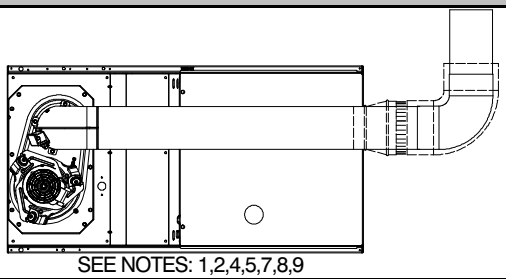

SEE NOTES: 1,2,4,5,7,8,9 A02067

Venting Notes

1. For common vent, vent connector sizing and vent material, use the NFGC.
2. Immediately increase to 5 inch (127 mm) or 6 inch (152 mm) vent connector outside furnace casing when 5 inch (127 mm) vent connector is required, refer to Note 1 above.
3. Side outlet vent for upflow and downflow installations must use Type B vent immediately after exiting the furnace, except when the Downflow Vent Guard Kit, is used in the downflow position
4. Type–B vent where required, refer to the Note 1 above.
5. A 4 inch (102 mm) single–wall (26 ga. minimum) vent must be used inside furnace casing and when the Downflow Vent Guard Kit is used external to the furnace.
6. Accessory Downflow Vent Guard Kit is required in downflow installations with lower vent configuration.
7. Chimney Adapter Kit may be required for exterior masonry chimney applications. Refer to Chimney Adapter Kit for sizing and complete application details.
8. Secure vent connector to furnace elbow with (2) corrosion–resistant sheet metal screws, spaced approximately 180° apart.
9. Secure all other single wall vent connector joints with (3) corrosion resistant screws spaced approximately 120° apart. Secure Type–B vent connectors per vent connector manufacturer's recommendations.

MINIMUM CLEARANCES TO COMBUSTIBLE MATERIALS FOR ALL UNITS

This forced air furnace is equipped for use with natural gas at altitudes 0 – 10,000 ft (0 – 3,050m).
An accessory kit, supplied by the manufacturer, shall be used to convert to propane gas use or may be required for some natural gas applications.
This furnace is for indoor installation in a building constructed on site.
The furnace may be installed on combustible flooring in alcove or closet at minimum clearance as indicated by the diagram from combustible material.
This furnace may be used with a Type B–1 Vent and may be vented in common with other gas fired appliances.
This furnace is approved for UPFLOW, DOWNFLOW, and HORIZONTAL installations.
Downflow Positions:

† Installation on non–combustible floors only.
For Installation on combustible flooring only when installed on special base or coil assembly.

∅ 18 inch front clearance required for alcove.

* Indicate supply or return sides when furnace is in the horizontal position. Line contact only permissible between lines formed by intersections of the Top and two Sides of the furnace jacket, and building joists, studs or framing.

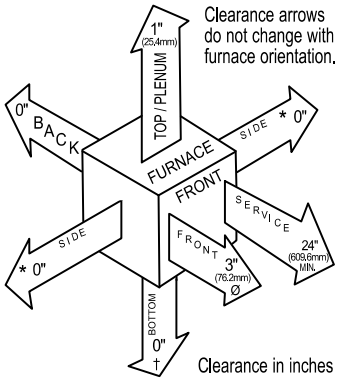

Vent Clearance to combustibles:
For Single Wall vents 6 inches (6 po).
For Type B-1 vent type 1 inch (1 po).

BLOWER PERFORMANCE DATA							
N8MSN & N8MSL	**0451408A**	**0451412A**	**0701408A**	**0701412A**	**0701716A**	**0901714B**	**0902116A**
DIRECT–DRIVE MOTOR Hp (PSC)	1/5	1/3	1/5	1/3	1/2	1/3	1/2
MOTOR FULL LOAD AMPS	2.8	5.2	2.8	5.2	7.1	5.2	7.1
RPM (Nominal)–Speeds	1075–3	1075–3	1075–3	1075–3	1075–3	1075–4	1075–3
BLOWER WHEEL DIAMETER X WIDTHS – in. (mm)	10 x 6 (254 x 152)				11 x 8 (279 x 203)	10 x 8 (254 x 203)	10 x 10 (254 x 254)

N8MSN & N8MSL	**0902120A**	**1101712A**	**1102116A**	**1102122A**	**1352116A**	**1352422A**	**1552420A**
DIRECT–DRIVE MOTOR Hp (PSC)	3/4	1/3	1/2	3/4	1/2	3/4	3/4
MOTOR FULL LOAD AMPS	11.8	5.2	7.1	11.8	7.1	11.8	11.8
RPM (Nominal)–Speeds	1075–3	1075–3	1075–3	1075–3	1075–3	1075–3	1075–3
BLOWER WHEEL DIAMETER X WIDTHS – in. (mm)	11 x 11 (279 x 279)	10 x 8 (254 x 203)	10 x 10 (254 x 254	11 x 11 (279 x 279)	10 x 10 (254 x 254)	11 x 11 (279 x 279)	11 x 11 (279 x 279)

PSC—Permanent Split Capacitor

AIR DELIVERY – CFM (with filter)*												
FURNACE SIZE	RETURN–AIR INLET	SPEED	EXTERNAL STATIC PRESSURE (in. w.c.)									
			0.1	0.2	0.3	0.4	0.5	0.6	0.7	0.8	0.9	1.0
0451408A	Bottom or Side(s)	High	1035	995	945	895	835	770	675	565	390	195
		Med–Low	865	830	790	745	690	625	545	440	250	195
		Low	760	720	680	635	580	520	445	345	220	195
0451412A	Bottom or Side(s)	High	1440	1375	1305	1240	1160	1070	975	870	730	560
		Med–Low	1360	1300	1240	1175	1115	1040	950	850	725	575
		Low	1250	1210	1160	1100	1040	965	885	790	670	520
0701408A	Bottom or Side(s)	High	1030	1005	965	925	870	810	740	645	465	280
		Med–Low	835	815	790	755	710	660	590	480	325	205
		Low	725	700	675	635	595	545	460	350	250	––
0701412A	Bottom or Side(s)	High	1425	1375	1320	1265	1200	1125	1035	940	830	655
		Med–Low	1320	1280	1240	1205	1140	1075	995	905	790	620
		Low	1200	1175	1145	1105	1050	990	920	840	725	555
0701716A	Bottom or Side(s)	High	1755	1700	1635	1505	1570	1435	1350	1260	1160	1055
		Med–Low	1550	1520	1475	1430	1375	1310	1240	1155	1070	970
		Low	1355	1340	1310	1280	1240	1190	1125	1060	975	890
0901714B	Bottom or Side(s)	High	1650	1600	1535	1465	1385	1285	1175	1055	895	645
		Med–High	1515	1485	1440	1380	1300	1220	1115	990	830	600
		Med–Low	1385	1360	1320	1260	1195	1120	1025	915	710	565
		Low	1205	1180	1160	1120	1065	1005	925	810	630	510
0902116A	Bottom or Side(s)	High	1940	1880	1805	1720	1635	1540	1425	1290	1090	830
		Med–Low	1740	1700	1650	1590	1525	1440	1335	1195	1010	820
		Low	1505	1505	1480	1440	1375	1300	1190	1045	890	740
0902120A	Bottom Only	High	2405	2310	2220	2130	2025	1920	1790	1660	1530	1350
		Med–Low	2170	2110	2040	1970	1895	1785	1675	1565	1420	1260
		Low	1920	1875	1835	1780	1715	1630	1535	1420	1275	1135
	Both Sides or 1 Side & Bottom	High	2530	2450	2365	2270	2165	2065	1940	1805	1670	1505
		Med–Low	2230	2170	2110	2050	1985	1890	1780	1660	1525	1360
		Low	1895	1890	1845	1815	1755	1685	1600	1480	1350	1180
	1 Side Only	High	2475	2395	2300	2200	2090	1985	1865	1730	1585	1425
		Med–Low	2105	2145	2070	2010	1940	1845	1735	1620	1475	1325
		Low	1850	1860	1810	1770	1715	1650	1555	1445	1310	1150
1101712A	Bottom or Side(s)	High	1600	1550	1490	1425	1355	1260	1135	990	785	530
		Med–Low	1475	1435	1395	1335	1285	1185	1070	890	725	450
		Low	1315	1295	1265	1220	1155	1080	985	810	675	440
1102116A	Bottom or Side(s)	High	1980	1915	1835	1750	1655	1495	1365	1185	965	700
		Med–Low	1745	1710	1650	1560	1450	1340	1205	1090	865	605
		Low	1530	1515	1470	1400	1310	1215	1095	990	830	670
1102122A	Bottom Only	High	2485	2415	2340	2255	2160	2060	1950	1840	1720	1565
		Med–Low	2135	2100	2060	2000	1930	1860	1765	1670	1555	1425
		Low	1855	1840	1815	1775	1725	1675	1600	1510	1405	1290
	Bottom, Sides or 1 Side & Bottom	High	––	––	2355	2285	2190	2090	1965	1850	1705	1535
		Med–Low	2140	2100	2050	1990	1935	1865	1760	1670	1545	1410
		Low	1855	1840	1815	1775	1725	1675	1600	1510	1405	1290
	1 Side Only	High	2495	2440	2370	2290	2205	2120	2015	1910	1775	1625
		Med–Low	2030	2025	2000	1950	1905	1850	1750	1660	1555	1425
		Low	––	1735	1725	1695	1650	1595	1535	1455	1335	1230
1352116A	Bottom or Side(s)	High	2065	2000	1930	1835	1710	1590	1420	1235	1025	835
		Med–Low	1790	1755	1705	1640	1550	1465	1295	1145	945	775
		Low	1480	1480	1480	1450	1380	1295	1160	1005	855	670
1352422A	Bottom Only	High	2445	2365	2280	2190	2085	1980	1850	1705	1520	1355
		Med–Low	2130	2080	2025	1960	1880	1795	1690	1550	1405	1255
		Low	1860	1830	1800	1755	1705	1630	1530	1415	1280	1140
	Bottom, Sides or Side & Bottom	High	––	––	2355	2280	2160	2065	1930	1805	1655	1465
		Med–Low	2120	2075	1995	1970	1905	1835	1735	1645	1515	1325
		Low	1860	1830	1800	1755	1725	1630	1530	1415	1280	1140
	1 Side Only	High	––	––	2215	2130	2030	1920	1795	1675	1540	1385
		Med–Low	2070	2015	1970	1935	1855	1765	1655	1550	1445	1265
		Low	1860	1830	1800	1755	1725	1630	1530	1415	1280	1140
1552420A	Bottom Only	High	2465	2430	2375	2305	2215	2110	2000	1865	1715	1530
		Med–Low	2115	2095	2055	2005	1940	1845	1820	1675	1525	1390
		Low	1800	1790	1770	1735	1695	1640	1570	1465	1345	1225
	Both Sides or 1 Side & Bottom	High	––	––	2375	2285	2185	2105	1995	1870	1720	1555
		Med–Low	2155	2125	2075	2015	1935	1830	1780	1635	1485	1365
		Low	1800	1790	1770	1735	1695	1640	1570	1465	1345	1225
	1 Side Only	High	––	––	2260	2180	2070	1975	1865	1740	1595	1440
		Med–Low	2140	2085	2020	1950	1850	1745	1695	1545	1415	1290
		Low	1800	1790	1770	1735	1695	1640	1570	1465	1345	1225

* A filter is required for each return–air inlet. Airflow performance included 3/4–in. (19 mm) washable filter media such as contained in factory–authorized accessory filter rack. To determine airflow performance without this filter, assume an additional 0.1 in. w.c. available external static pressure.

–– Indicates unstable operating conditions.

ACCESSORIES								
PART	DESCRIPTION	0451408	0451412	0701408	0701412	0701716	0901714	0902116
NAHB00501FF	External Bottom Filter Rack, 14 inch (14 x 25 inch washable filter included)	X	X	X	X			
NAHB00601FF	External Bottom Filter Rack, 17 inch (17 x 25 inch washable filter included)					X	X	
NAHB00701FF	External Bottom Filter Rack, 21 inch (20 x 25 inch washable filter included)							X
NAHA00506FB†	Washable filter, 1 inch 16 x 25 (6 pack)	X	X	X	X	X	X	
NAHA00706FB	Washable filter, 1 inch 24 x 25 (6 pack)							X
NAHA01001FF	Side Filter Rack 16 x 25 (not adjustable)	X	X	X	X	X	X	X
NAHA01006FF	Filter Rack 16 x 25 (6 packs)	X	X	X	X	X	X	X
NAHA00601WK	Twinning Kit (Upflow, Downflow and Horizontal)	X	X	X	X	X	X	X
NAHA01101SB	Combustible Floor Base (Not required when evaporator coil case is used for downflow)	X	X	X	X	X	X	X
NAHB00301VC	Downflow Vent Guard (Not required when vent is routed through cabinet)	X	X	X	X	X	X	X
NAHA00401DH	Chimney Adapter Kit 4–in. vent	X	X	X	X	X	X	X
NAHC00901LP*	Natural–to–Propane Conversion Kit *	X	X	X	X	X	X	X
NAHA00801NG*	Propane–to–Natural Conversion Kit *	X	X	X	X	X	X	X
NAHB00301WL	Warning Label Kit	X	X	X	X	X	X	X

ACCESSORIES								
PART	DESCRIPTION	0902120	1101712	1102116	1102122	1352116	1352422	1552420
NAHB00601FF	External Bottom Filter Rack, 17 inch (17 x 25 inch washable filter included)		X					
NAHB00701FF	External Bottom Filter Rack, 21 inch (20 x 25 inch washable filter included)	X		X	X	X		
NAHB00801FF	External Bottom Filter Rack, 24 inch (24 x 25 inch washable filter included)						X	X
NAHA00506FB†	Washable filter, 1 inch 16 x 25 (6 pack)		X					
NAHA00706FB	Washable filter, 1 inch 24 x 25 (6 pack)	X		X	X	X	X	X
NAHA01001FF	Side Filter Rack 16 x 25 (not adjustable)	X	X	X	X	X	X	X
NAHA01006FF	Side Filter Racks 16 x 25 (6 pack)	X	X	X	X	X	X	X
NAHA00601WK	Twinning Kit (Upflow, Downflow and Horizontal)	X	X	X	X	X	X	X
NAHA01101SB	Combustible Floor Base (Not required when evaporator coil case is used for downflow)	X	X	X	X	X	X	X
NAHB00301VC	Downflow Vent Guard (Not required when vent is routed through cabinet)	X	X	X	X	X	X	X
NAHA00401DH	Chimney Adapter Kit 4–in. vent	X	X	X	X			
NAHA00301DH	Chimney Adapter Kit 5–in. vent					X	X	X
NAHC00901LP*	Natural–to–Propane Conversion Kit *	X	X	X	X	X	X	X
NAHA00801NG*	Propane–to–Natural Conversion Kit *	X	X	X	X	X	X	X
NAHB00301WL	Warning Label Kit	X	X	X	X	X	X	X

X Accessory available
† Suitable for side return filter rack and 17 inch external bottom filter rack
* Factory authorized and field installed. Gas conversion kits are CSA recognized.

Copyright 2014 International Comfort Products
Lewisburg, Tennessee 37091 USA
www.GoArcoaire.com