D5CVRAH
Outdoor Unit Single Zone Ductless System
Sizes 9K to 24K

SERVICE MANUAL

TABLE OF CONTENTS

	PAGE
SAFETY CONSIDERATIONS	1
INTRODUCTION	1
MODEL NUMBER NOMENCLATURE	2
ELECTRICAL DATA	3
WIRING	4
CONNECTION DIAGRAMS	5
WIRING DIAGRAMS	6
REFRIGERANT CYCLE DIAGRAMS	8
PIPING AND REFRIGERANT	11
SYSTEM EVACUATION AND CHARGING	12
ELECTRONIC FUNCTIONS	13
INQUIRY MODE	18
GENERAL TROUBLESHOOTING	22
ERROR CODES	24
TROUBLESHOOTING BY ERROR CODE	26
CHECK PROCEDURES	59
DISASSEMBLY INSTRUCTIONS	63
APPENDIX	84

SAFETY CONSIDERATIONS

Installing, starting up, and servicing air-conditioning equipment can be hazardous due to system pressures, electrical components, and equipment location (roofs, elevated structures, etc.). Only trained, qualified installers and service mechanics should install, start-up, and service this equipment.

Untrained personnel can perform basic maintenance functions such as coil cleaning. All other operations should be performed by trained service personnel.

When working on the equipment, observe precautions in the product literature and on tags, stickers, and labels attached to the equipment.

Follow all safety codes. Wear safety glasses and work gloves. Keep a quenching cloth and fire extinguisher nearby when brazing. Use care in handling, rigging, and setting bulky equipment.

Read this manual thoroughly and follow all warnings or cautions included in the literature and attached to the unit. Consult local building codes and National Electrical Code (NEC) for special requirements. Recognize safety information. This is the safety-alert symbol ⚠. When you see this symbol on the unit and in instructions or manuals, be alert to the potential for personal injury.

Understand these signal words: **DANGER**, **WARNING**, and **CAUTION**. These words are used with the safety-alert symbol. **DANGER** identifies the most serious hazards which **will** result in severe personal injury or death. **WARNING** signifies hazards which **could** result in personal injury or death. **CAUTION** is used to identify unsafe practices which **may** result in minor personal injury or product and property damage. **NOTE** is used to highlight suggestions which **will** result in enhanced installation, reliability, or operation.

⚠ WARNING

ELECTRICAL SHOCK HAZARD
Failure to follow this warning could result in personal injury or death.

Before installing, modifying, or servicing system, main electrical disconnect switch must be in the **OFF** position. There may be more than 1 disconnect switch. Lock out and tag switch with a suitable warning label.

⚠ WARNING

EXPLOSION HAZARD
Failure to follow this warning could result in death, serious personal injury, and/or property damage. Never use air or gases containing oxygen for leak testing or operating refrigerant compressors. Pressurized mixtures of air or gases containing oxygen can lead to an explosion.

⚠ CAUTION

EQUIPMENT DAMAGE HAZARD
Failure to follow this caution may result in equipment damage or improper operation.Do not bury more than 36 in. (914 mm) of refrigerant pipe in the ground. If any section of pipe is buried, there must be a 6 in. (152 mm) vertical rise to the valve connections on the outdoor units.

If more than the recommended length is buried, refrigerant may migrate to the cooler buried section during extended periods of system shutdown. This causes refrigerant slugging and could possibly damage the compressor at start-up.

INTRODUCTION

This service manual provides the necessary information to service, repair, and maintain the D5CVRA family of heat pumps. This manual has an “APPENDIX” on page 84 with data required to perform troubleshooting. Use the “TABLE OF CONTENTS” on page 1 to locate a desired topic.

MODEL NUMBER NOMENCLATURE

SYSTEM TONS	BTUH	VOLTAGE	MODEL
.75	9,000	115-1	D5CVRAH09AAJ
1	12,000	115-1	D5CVRAH12AAJ
0.75	9,000	208/230-1	D5CVRAH09AAK
1	12,000	208/230-1	D5CVRAH12AAK
1.5	18,000	208/230-1	D5CVRAH18AAK
2	24,000	208/230-1	D5CVRAH24AAK

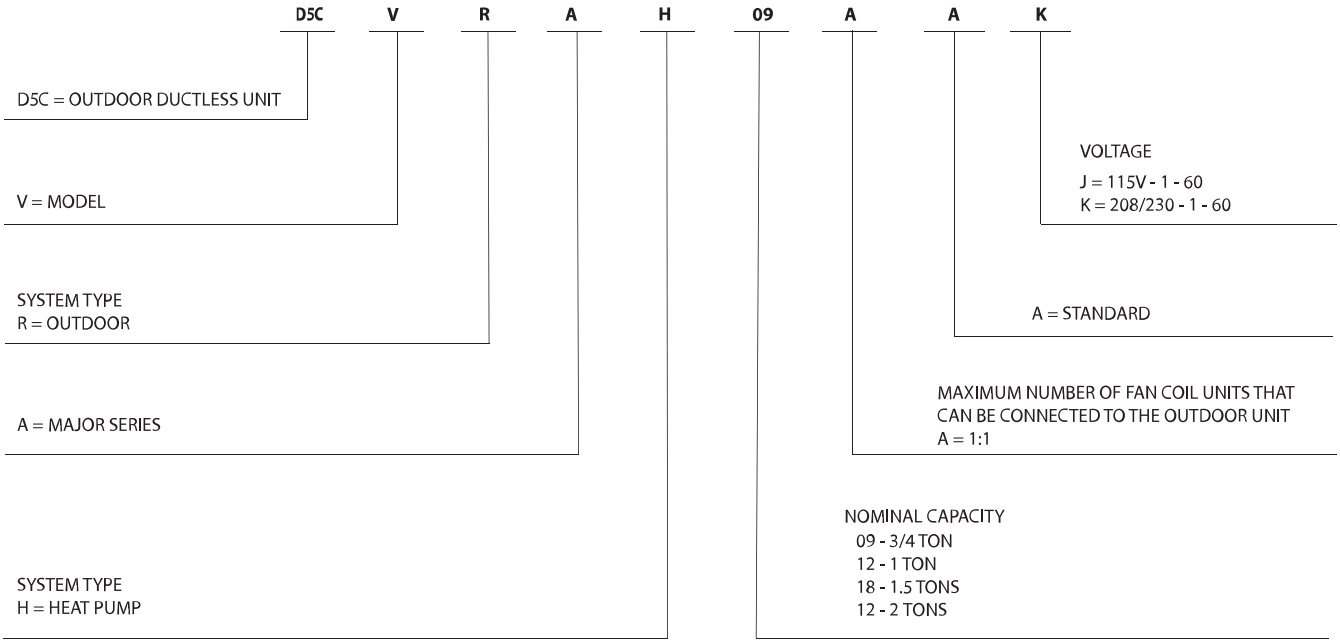

Fig. 1 —Nomenclature

For the ICP brand the SERIAL NUMBER will be date coded by a "V", year (last 2 digits of calendar year), week (2 digits, "01" thru "52") followed with a unique 5 digit sequential number that starts at "40000" and cannot exceed "49999". After reaching 49999 the numbers start over at 40000 again. The model number and serial numbers must comply with Carrier MFG-02.

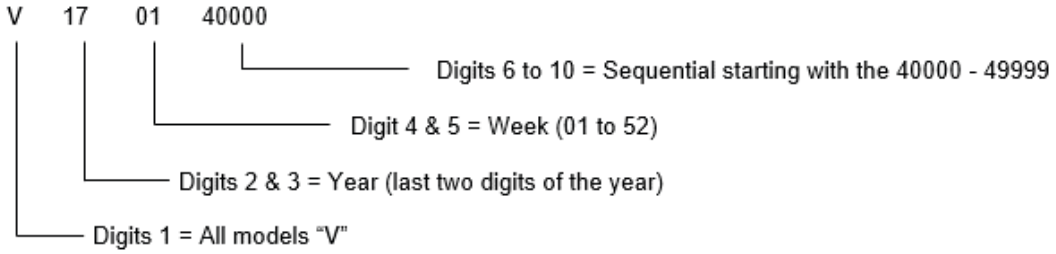

Fig. 2 —Serial Number Nomenclature

Use of the AHRI Certified TM Mark indicates a manufacturer's participation in the program For verification of certification for individual products, go to www.ahridirectory.org.

ELECTRICAL DATA

Table 1 – ELECTRICAL DATA

Outdoor Unit		9K	12K	9K	12K	18K	24K
		(115V)		(208/230V)			
Minimum Circuit Ampacity (MCA)	A	17	19.5	10	10	15	19
Maximum Overcurrent Protection Ampacity (MOPA)	A	20	20	15	15	20	20
Voltage-Phase-Frequency		115-1-60		208/230-1-60			
Max – Min Voltage Range		127-104		253-187			
Cooling							
Running current	(A)	9.4	14.1	3.7	5.9	7.6	11.4
Power consumption	(W)	892	1364	857	1364	1717	2667
Heating							
Running current	(A)	11.6	13.1	3.9	5.3	8.2	11
Power consumption	(W)	1083	1240	896	1218	1830	2530

Manufacturer reserves the right to change, at any time, specifications and designs without notice and without obligations.

WIRING

ELECTRICAL WIRING INSTALLATION

Wiring for the outdoor unit must conform to NEC (National Electrical Code) or CEC (Canadian Electrical Code) and local codes. Use Electrical Data table MCA (minimum circuit amps) and MOCP (maximum over current protection) to correctly size the wires and the disconnect fuse or breakers respectively.

All field wiring construction should be finished by a qualified electrician.

Air conditioning equipment must be grounded according to the local electrical codes.

Provide electrical disconnect per local codes.

NOTE: DO NOT connect the power wire to the terminal of the signal wire. Connection of power to any other terminal other than L1 or L2 will cause damage to the control board.

Any control signal cable should be run separately from the power wiring.

Use of metallic conduit or shielded cable is recommended. Maintain a distance of 12 inches(300mm) from the power wiring.

NOTE: DO NOT run the power wiring and control wiring in the same conduit.

Size the wiring in accordance to the NEC / CEC. Select different colors for different wire according to relevant regulations.

Ensure that the wire color of the outdoor and the terminal number are the same as those of the indoor unit.

⚠ CAUTION

EQUIPMENT DAMAGE HAZARD

Failure to follow this caution may result in equipment damage or improper operation.

Be sure to comply with local codes while running wire from the indoor unit to the outdoor unit.

Wires should be sized based on NEC and local codes.

Every wire must be connected firmly. Loose wiring may cause the terminal to overheat or result in unit malfunction. A fire hazard may also exist. Ensure all wiring is tightly connected.

No wire should touch the refrigerant tubing, compressor or any moving parts.

Disconnecting means must be provided and shall be located within sight and readily accessible from the air conditioner.

NOTE: Matches with multi-family and residential fan coils require separate power for the indoor and outdoor unit. A 24V interface kit is required for compatibility. Refer to the 24V Interface Kit installation manual.

Manufacturer reserves the right to change, at any time, specifications and designs without notice and without obligations.

CONNECTION DIAGRAMS

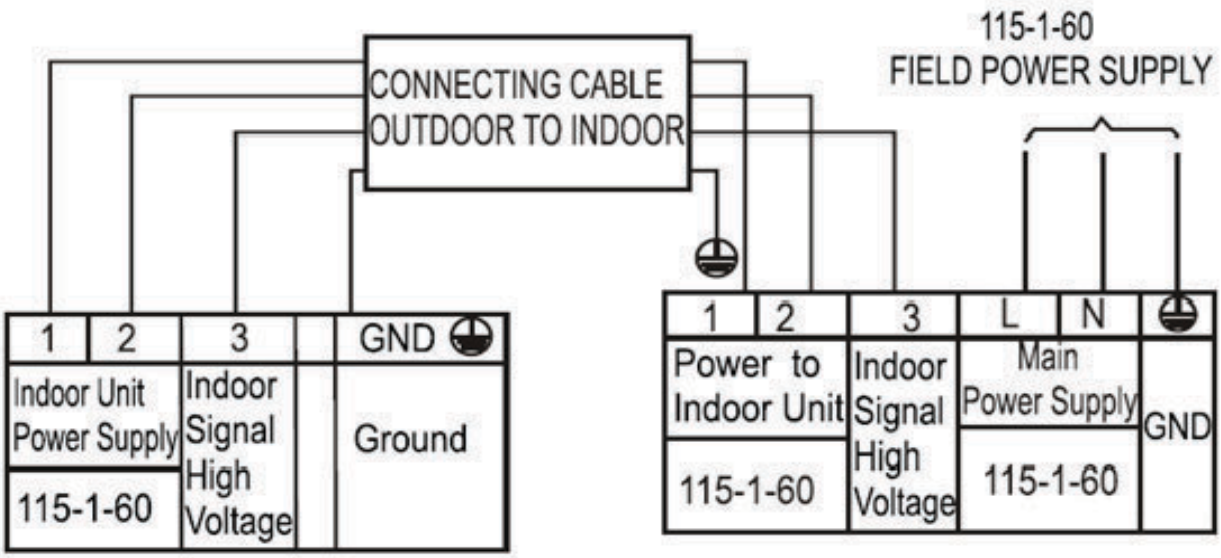

Fig. 3 —9k - 12K (115V Only)

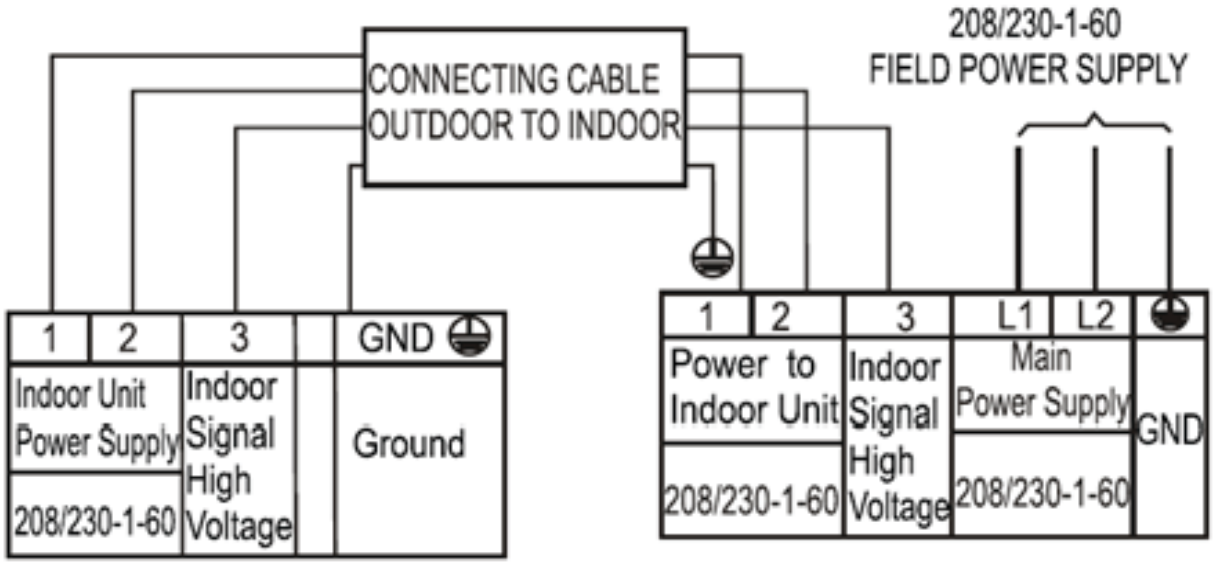

Fig. 4 —9K - 24K (208V/230V)

NOTE:

1. Do not use thermostat wire for any connection between indoor and outdoor units.
2. All connections between the indoor and outdoor units must be made as shown in Figures 3, 4. The connections are sensitive to polarity and will result in a fault code.

WIRING DIAGRAMS

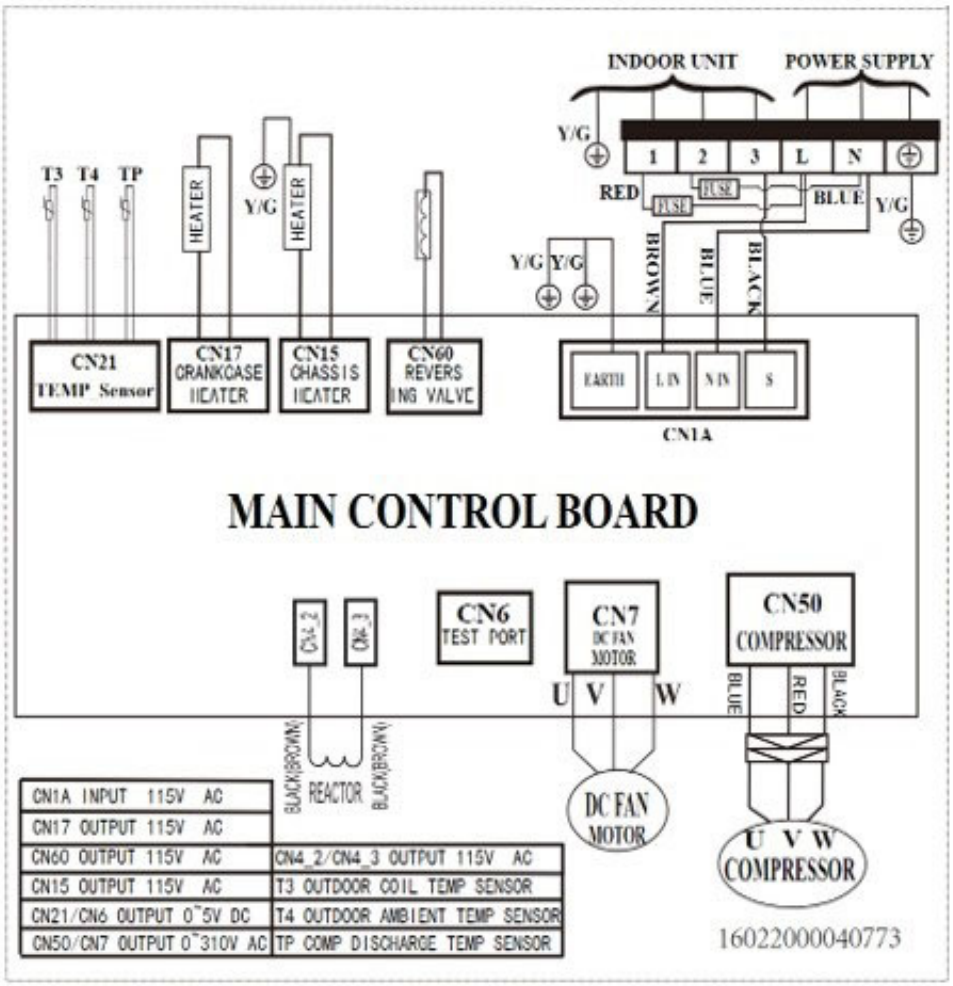

Fig. 5 – 9K - 12K (115V)

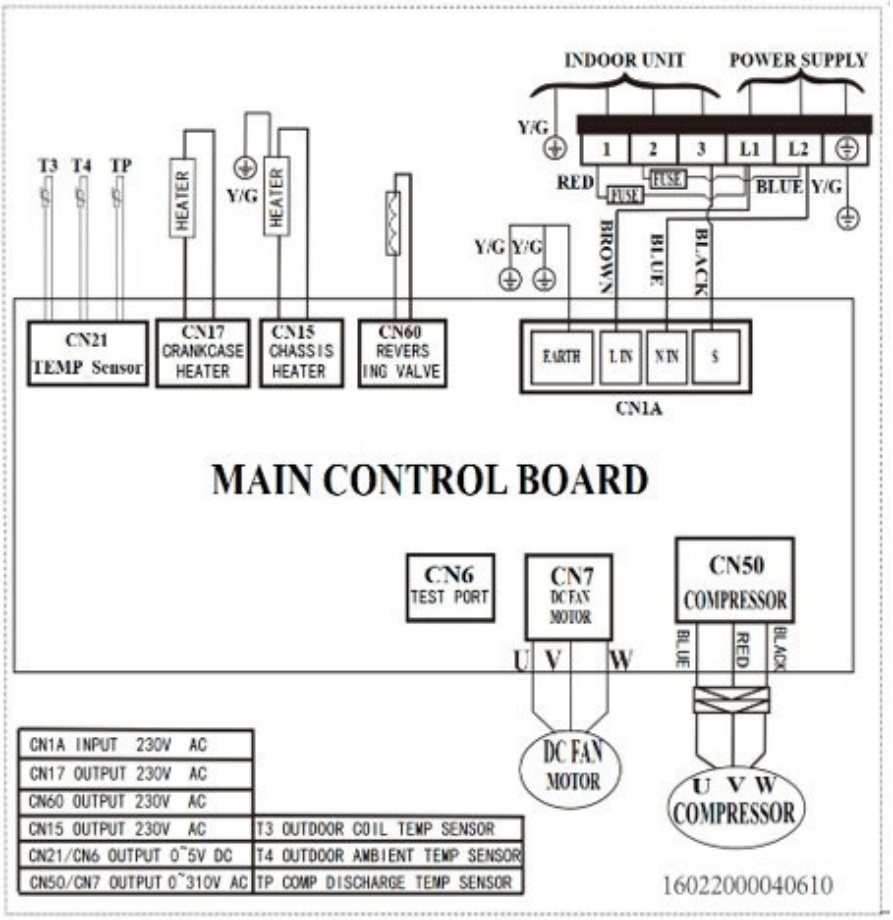

Fig. 6 – 9K - 12K - 18K (208V/230V)

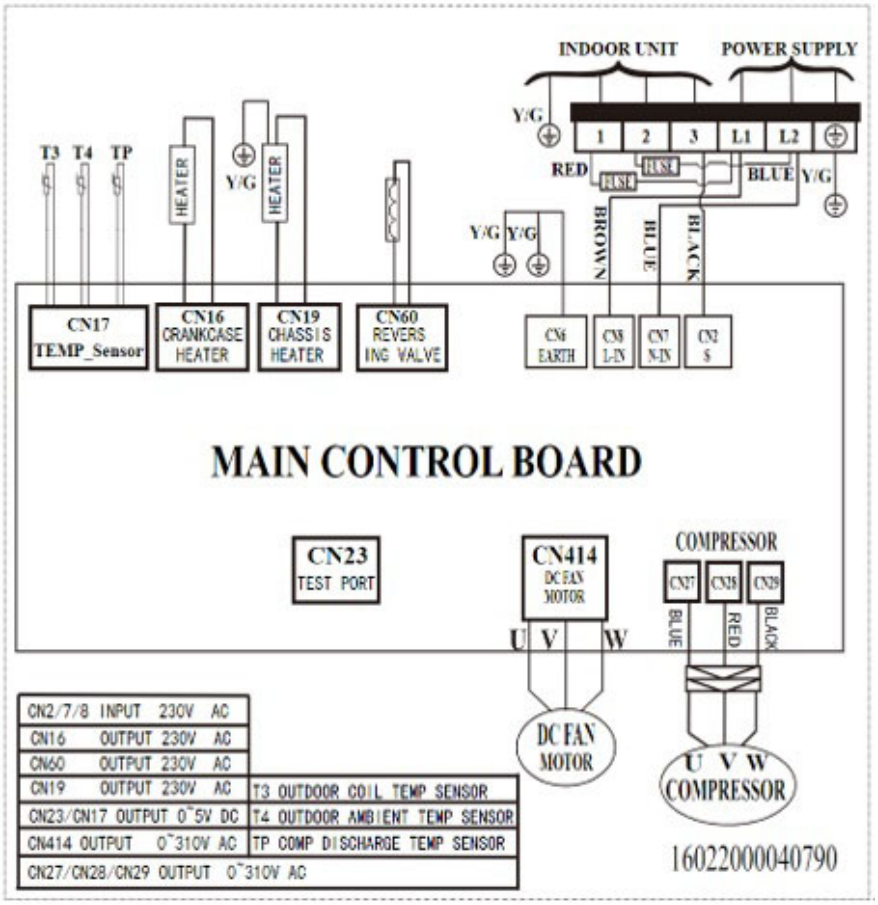

Fig. 7 – 24K (208V/230V)

REFRIGERANT CYCLE DIAGRAMS

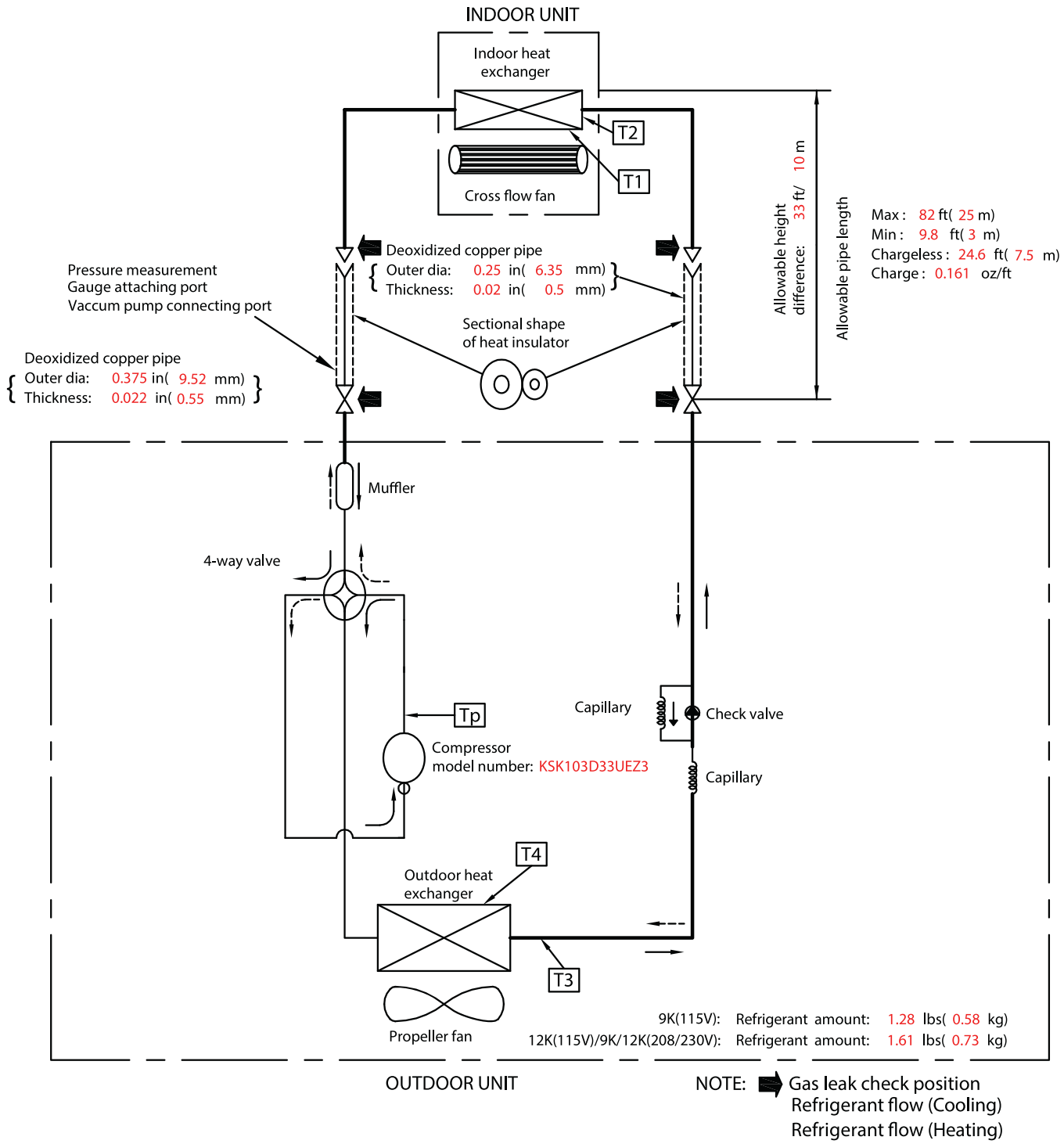

Fig. 8 —9-12K (115V) and 9-12K (208/230V)

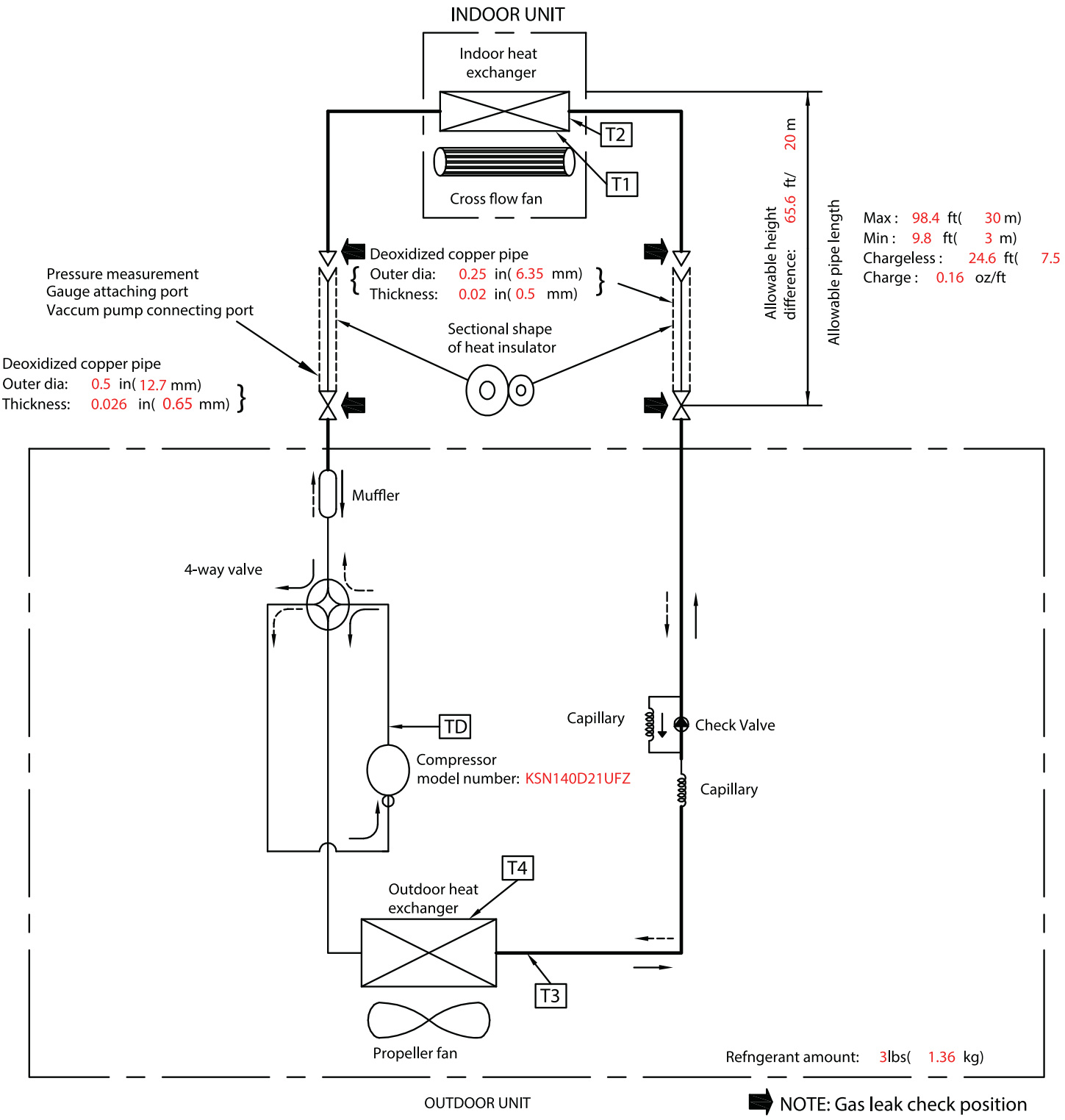

Fig. 9 —18K (208-230V)

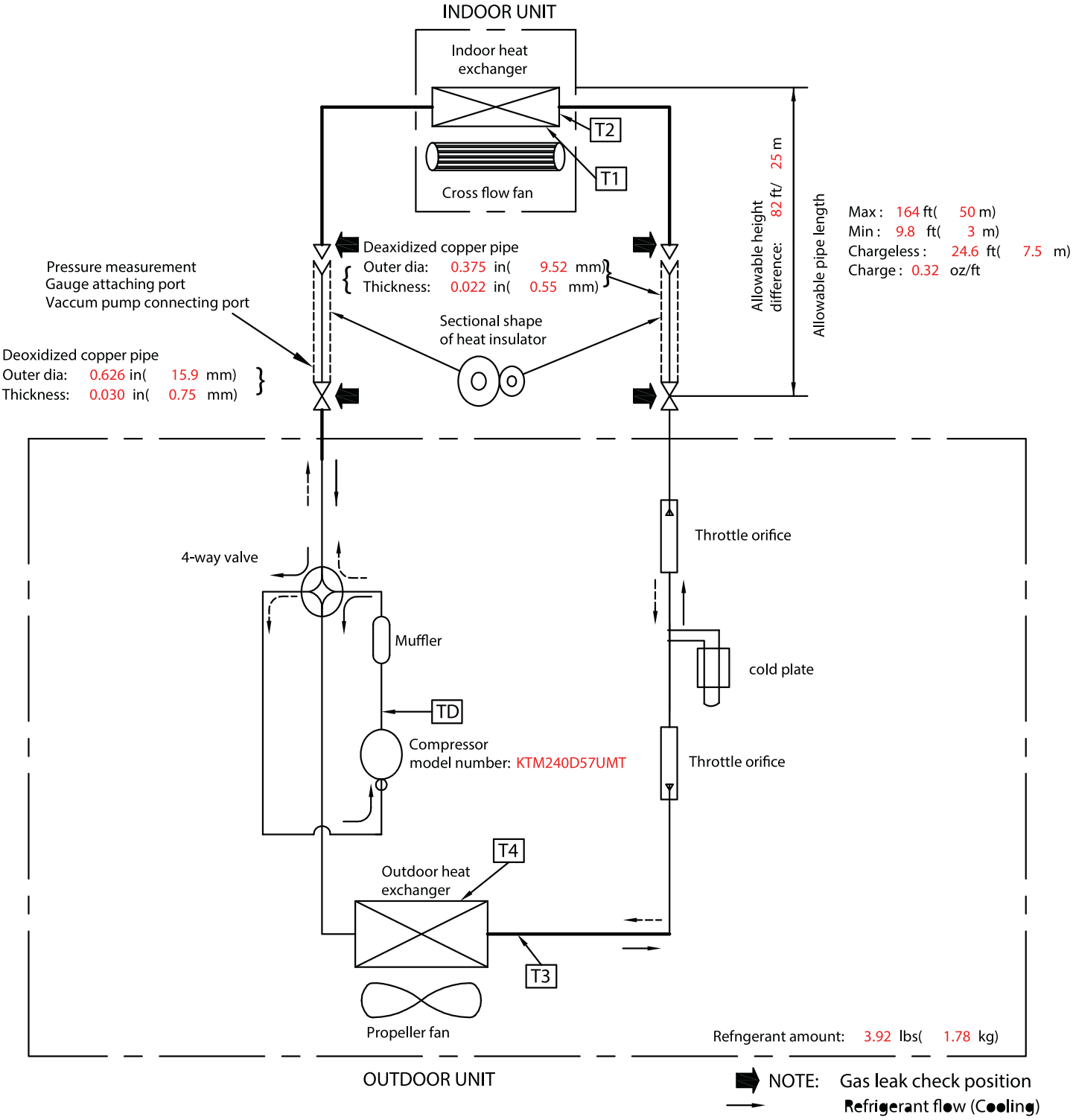

Fig. 10 —24K (208-230V)

PIPING AND REFRIGERANT

General Refrigerant Line Sizing

1. The outdoor units are shipped with a full charge of R-454B refrigerant. All charges, line sizing, and capacities are based on runs of 25ft. (7.6m). For runs over 25 ft. (7.6 m), consult the “Long Line Applications” on page 14 for the proper charge adjustments.
2. The minimum refrigerant line length between the indoor and outdoor units is 10 ft. (3 m).
3. Refrigerant lines should not be buried in the ground. If it is necessary to bury the lines, not more than 36in (914 mm) should be buried. Provide a minimum 6in (152 mm) vertical rise to the service valves to prevent refrigerant migration.
4. Both lines must be insulated. Use a minimum of 1/2in. (12.7 mm) thick insulation. Closed-cell insulation is recommended in all long-line applications.
5. Special consideration should be given to isolating the interconnecting tubing from the building structure. Isolate the tubing so vibration or noise is not transmitted into the structure.

IMPORTANT: Both refrigerant lines must be insulated separately.

Table 2 lists maximum lengths allowed.

Table 2 – Piping and Refrigerant

SYSTEM SIZE			9 K (115 V)	12K (115V)	9 K (208/230 V)	12K (208/230 V)	18K (208/230 V)	24K (208/230 V)
PIPING	Min. Piping Length	ft. (m)	10 (3)	10 (3)	10 (3)	10 (3)	10 (3)	10 (3)
	Standard Piping Length	ft. (m)	24.6 (7.5)	24.6 (7.5)	24.6 (7.5)	24.6 (7.5)	24.6 (7.5)	24.6 (7.5)
	Max. outdoor-indoor height difference (OU higher than IU)	ft. (m)	49.21 (15)	49.21 (15)	49.21 (15)	49.21 (15)	65.6 (20)	82 (25)
	Max. outdoor-indoor height difference (IU higher than OU)	ft. (m)	32.8 (10)	32.8 (10)	32.8 (10)	32.8 (10)	65.6 (20)	82 (25)
	Max. Piping Length with no additional refrigerant charge per System (Standard	ft. (m)	24.6 (7.5)	24.6 (7.5)	24.6 (7.5)	24.6 (7.5)	24.6 (7.5)	24.6 (7.5)
	Total Maximum Piping Length per system	ft. (m)	82 (25)	82 (25)	82 (25)	82 (25)	98.4 (30)	164 (50)
	Additional refrigerant charge (between Standard – Max piping length)	Oz/ft (g/m)	0.161(15)	0.161(15)	0.161(15)	0.161(15)	0.161(15)	0.322(30)
	Suction Pipe (size - connection type)	In (mm)	ø3/8” (9.52)	ø3/8” (9.52)	ø3/8” (9.52)	ø3/8” (9.52)	ø1/2” (12.7)	ø5/8” (15.9)
	Liquid Pipe (size - connection type)	In (mm)	ø1/4” (6.35)	ø1/4” (6.35)	ø1/4” (6.35)	ø1/4” (6.35)	ø1/4” (6.35)	ø3/8” (9.52)
REFRIGERANT	Refrigerant Type	Type	R454B	R454B	R454B	R454B	R454B	R454B
	Charge Amount	lb. (kg)	1.01 (.46)	1.28 (.58)	1.28 (.58)	1.28 (.58)	2.38 (1.08)	3.42 (1.55)

Long Line Applications

1. .No change in line sizing is required.
2. .Add refrigerant per Table 3.

Table 3 – Additional Charge Table

UNIT SIZE	TOTAL LINE LENGTH		ADDITIONAL CHARGE, OZ/FT. FT (M)			
	Min	Max	10-25 (3-8)	>25-82 (8-25)	>82-98 (25-30)	>98-164 (30-50)
9	10(3)	82(25)	None	0.16		
12						
18		98(30)			0.16	
24		164(50)		0.32		

SYSTEM EVACUATION AND CHARGING

⚠ CAUTION

UNIT DAMAGE HAZARD

Failure to follow this caution may result in equipment damage or improper operation.

Never use the system compressor as a vacuum pump.

Refrigerant tubes and the indoor coil should be evacuated using the recommended 500 micron deep vacuum method. The alternate triple evacuation method may be used if the procedure outlined below is followed.

NOTE: Always break a vacuum with dry nitrogen.

USING VACUUM PUMP

1. Completely tighten flare nuts A, B, C, D. Connect the manifold gage charge hose to a charge port of the low side service valve (see Fig. 24).
2. Connect the charge hose to vacuum pump.
3. Fully open the low side of manifold gage (see Fig. 11).
4. Start the vacuum pump.
5. Evacuate using either the deep vacuum or triple evacuation method.
6. After evacuation is complete, fully close the low side of manifold gage and stop the vacuum pump operation.
7. The factory charge contained in the outdoor unit is good for up to 25 ft. (8 m) of line length. For refrigerant lines longer than 25 ft. (8 m), add refrigerant, up to the allowable length.
8. Disconnect the charge hose from the charge connection of the low side service valve.
9. Fully open service valves B and A.
10. Securely tighten the service valve caps.

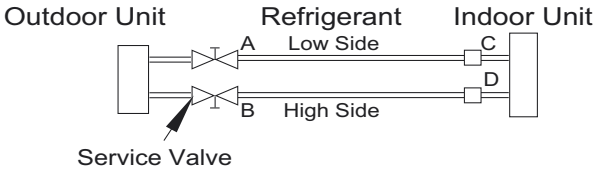

Fig. 11 —Service Valve

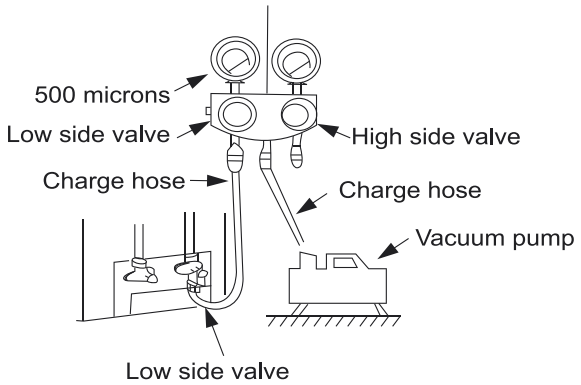

Fig. 12 —Manifold

EVACUATION

Evacuation of the system will remove air or nitrogen (non-condensables) as well as moisture. A proper vacuum will assure a tight, dry system before charging with refrigerant. The two methods used to evacuate a system are the deep vacuum method and the triple vacuum method.

DEEP VACUUM METHOD

The deep vacuum method requires a vacuum pump capable of pulling a vacuum of 500 micron and a vacuum gauge capable of accurately measuring this vacuum depth. This method is the most positive way of assuring a system is free of air and moisture (see Figure 13).

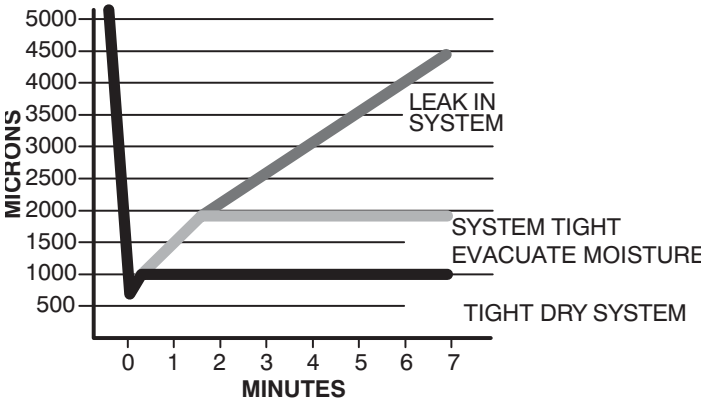

Fig. 13 —Deep Vacuum Graph

TRIPLE EVACUATION METHOD

The triple evacuation method should be used when vacuum pump is not capable of pumping down to 500 microns and system does not contain any liquid water. Refer to Fig. 14 and proceed as follows:

1. Attach refrigeration gauges and evacuate system down to 28 inches of mercury and allow pump to continue operating for an additional 15 minutes.
2. Close service valves and shut off vacuum pump.
3. Connect a nitrogen cylinder and regulator to system and flow nitrogen until system pressure is 2 psig.
4. Close service valve and allow system to stand for 1 hour. During this time, dry nitrogen will be able to diffuse throughout the system absorbing moisture.
5. Repeat this procedure as indicated in Fig. 14. System is now free of any contaminants and water vapor.

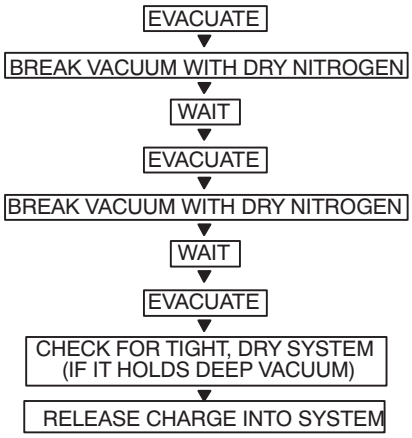

Fig. 14 —Triple Evacuation Method

FINAL TUBING CHECK

Check to be certain factory tubing on both the indoor and outdoor unit has not shifted during shipment. Ensure tubes are not rubbing against each other or any sheet metal. Pay close attention to the feeder tubes, making sure wire ties on feeder tubes are secure and tight.

Manufacturer reserves the right to change, at any time, specifications and designs without notice and without obligations.

ELECTRONIC FUNCTIONS

Abbreviation:

Table 4 – Unit element abbreviations

Abbreviation	Element
T1	Indoor room temperature
T2	Coil temperature of evaporator
T3	Coil temperature of condenser
T4	Outdoor ambient temperature
TP	Compressor discharge temperature
Tsc	Adjusted setting temperature

MAIN PROTECTION

Three minute delay for compressor restart

Less than a 1 minute delay for the initial start-up and a 3 minute delay for subsequent starts.

Compressor high temperature cutout

The unit stops working when the compressor high temperature cutout opens, and restarts after the compressor high temperature cutout closes. Compressor discharge temperature protection Compressor discharge temp. T5>239°F(115°C) for 5s, compressor stops.

Fan speed is out of control

When the indoor fan speed is too low (300RPM) or too high (1500RPM) for a certain time, the unit stops and the LED displays the failure.

Inverter module protection

The inverter module has a protection function for current, voltage and temperature. If any of these protections engage, the corresponding code displays on the indoor unit and the unit stops working.

Indoor fan delayed open function

When the unit starts up, the louver is active immediately and the indoor fan opens 10s later. If the unit is running in the HEATING mode, the indoor fan is also controlled by the anti-cold wind function.

Compressor preheating functions

Preheat parameters: When the T4 (outdoor ambient temperature) <37.4°F (3°C), the preheat function is activated.

Zero crossing detection error protection

If the AC detects that the time interval is not correct for a continuous 240s, the unit stops and the LED displays the failure. The correct zero crossing signal time interval should be between 6-13ms.

Sensor protection at open circuit and breaking disconnection

If only one temperature sensor malfunctions, the air conditioner continues to work however the error code displays on the LED, in the event of any emergency use. If more than one temperature sensor malfunctions, the air conditioner stops working.

Refrigerant leakage detection

This function is only active in the COOLING mode. The function helps prevent the compressor from being damaged by a refrigerant leakage or a compressor overload. When loss of charge is detected, the error code EL0C will be displayed on the indoor unit display.

Open condition:

When the compressor is active, the evaporator T2 coil temperature value has no or very little change.

OPERATION MODES AND FUNCTIONS

FAN Mode

1. Outdoor fan and compressor stop
2. Temperature setting function is disabled and no setting temperature appears.
3. Indoor fan can be set to high/med/low/auto
4. The louver operates the same as in the COOLING mode.
5. Auto fan

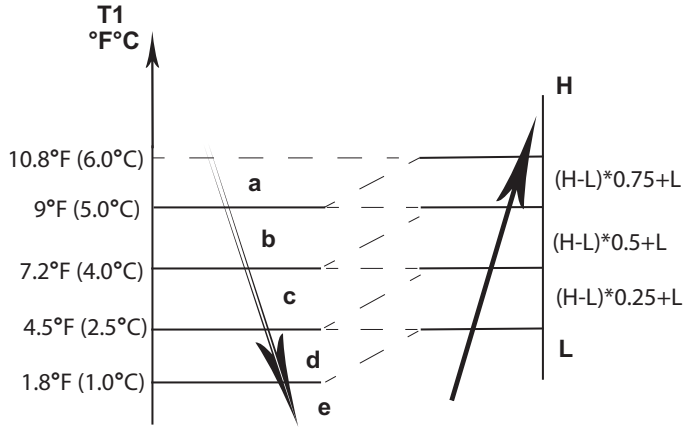

Fig. 15 —FAN Mode

COOLING Mode

Compressor Running Rules:

- When T1-Ts < -4°F (-2°C), the compressor stops.
- When T1-Ts > -1°F (-0.5°C), the compressor activates.
- When the unit runs in the QUIET mode, the compressor runs at a low frequency.
- When the current is more than the setting value, the current protection function activates, and the compressor stops.

Outdoor Fan Running Rules:

The outdoor unit runs at a different fan speed according to T4. For different outdoor units, the fan speeds differ.

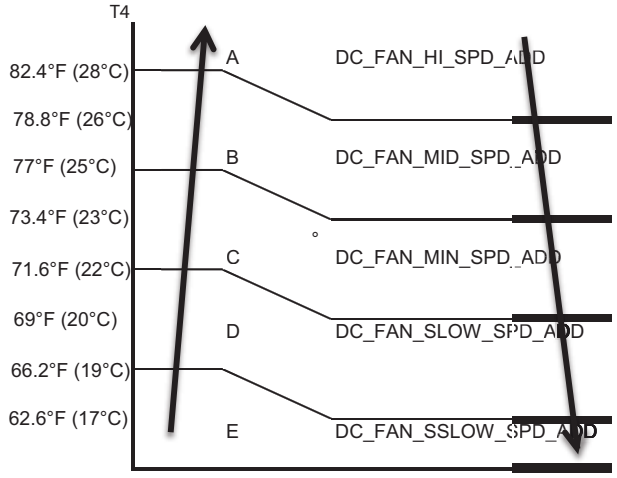

Fig. 16 —Outdoor Fan Running Rules

Indoor Fan Running Rules:

- In the COOLING mode, the indoor fan runs continuously and the user can select any of the following speeds: HIGH, MEDIUM, LOW and AUTO.

- When the setting temperature is reached, if the compressor stops operating, the indoor fan motor runs in the minimum or setting speed (see Fig. 17).

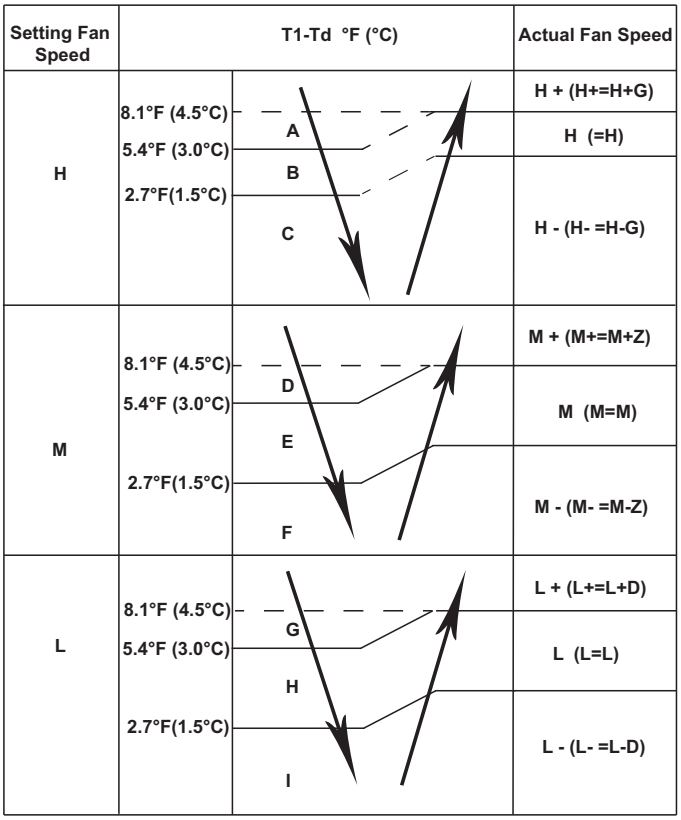

Fig. 17 —Indoor Fan Running Rules

The AUTO fan adheres to the following rules (see Fig. 19):

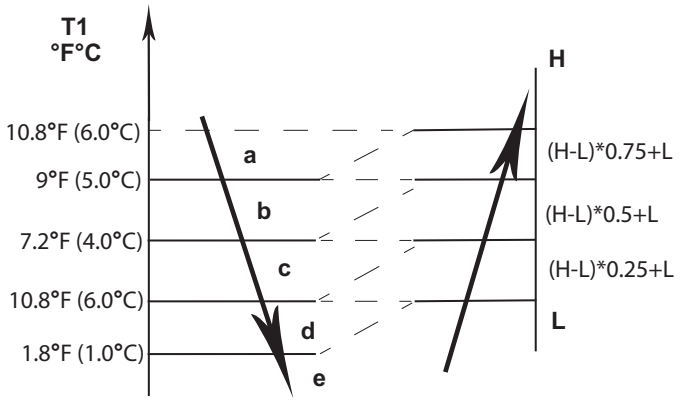

Fig. 18 —AUTO FAN Running Rules

Compressor Temperature Protection

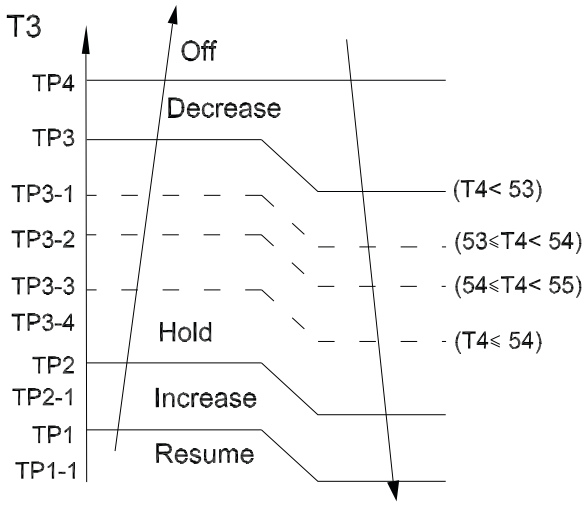

Fig. 19 —Compressor Temperature Protection

- Off: Compressor stops
- Decrease: Decrease the running frequency to the lower level
- Hold: Keep the current frequency
- Resume: No limitation for frequency

When the condenser temperature is higher than the setting value, the compressor stops.

Evaporator Temperature Protection

When the evaporator temperature is lower than the setting value the compressor stops.

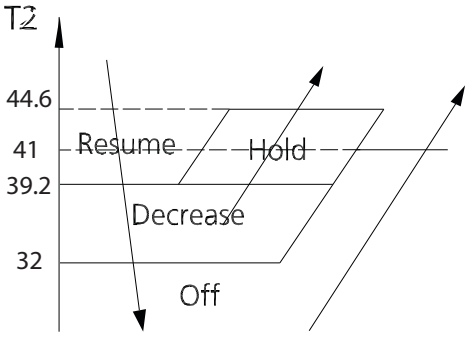

Fig. 20 —Evaporator Temperature Protection

HEATING Mode

Compressor Running Rules:

- When T1-Ts>-f'T, the compressor stops.
- When T1-Ts<f'T-1.5, the compressor is on. f'T is the programmed parameter for temperature compensation.
- When the AC runs in the MUTE mode, the compressor runs with a low frequency.
- When the current is more than the setting value, the current protection function activates and the compressor stops.

Outdoor Fan Running Rules:

The outdoor unit runs at a different fan speed according to T4. For different outdoor units, the fan speeds differ.

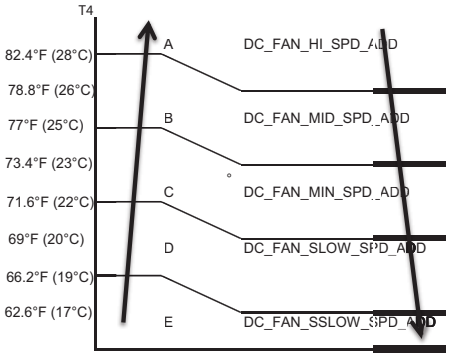

Fig. 21 —Outdoor Fan Running Rules

Indoor Fan Running Rules:

When the compressor is on, the user can set the indoor fan to either HIGH/MED/LOW/AUTO/MUTE. When the indoor unit coil temperature is low, the anti-cold air function starts and the indoor fan motor runs at the low speed. The speed can not be changed.

When the temperature is lower than the setting value, the indoor fan motor stops. When the indoor temperature reaches the setting temperature, the compressor stops, the indoor fan motor runs at the minimum speed or setting speed. The anti-cold air function is valid. The indoor fan is controlled as shown in Fig. 35.

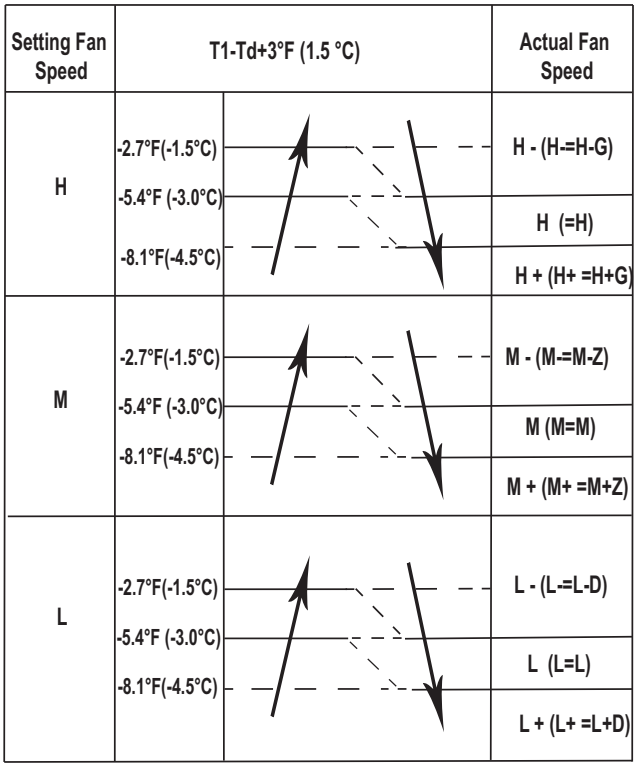

Fig. 22 —Indoor Fan Running Rules

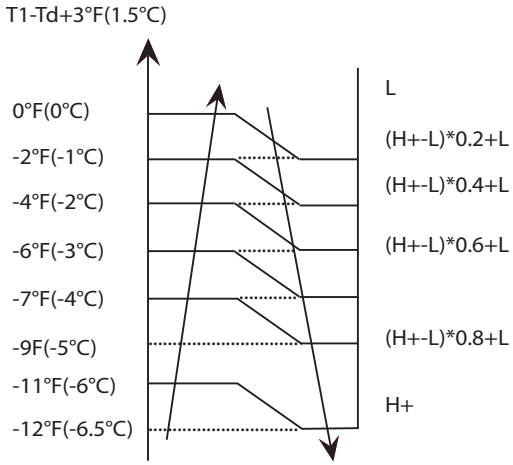

Fig. 23 —Auto Fan Action in HEATING Mode

Defrost Mode

If any of the following items is satisfied, the unit enters the **DEFROST** mode. After the compressor starts up and runs continuously, mark the minimum value of T3 from the 10th minutes as T30.

1. If the compressor cumulate running time is up to 29 minutes and T3 <TCDI1,T3+ T30SUBT3ONE ≤T30.
2. If the compressor cumulate running time is up to 35 minutes and T3 <TCDI2,T3+ T30SUBT3TWO ≤T30.
3. If the compressor cumulate running time is up to 29 minutes and T3 <TCDI3 for 3 minutes.
4. If the compressor cumulate running time is up to 120 minutes and T3 <-15^{0}C.
5. If the compressor cumulate running time is up to 30 minutes, T4 - T3>(0.5T4+KDELTT_ADD) and T3<TCDIN5_ADD
6. When T3 or T4 is lower than -3^{0}C cumulate running for 2 hours (not needed based on T30 runs continuously for a minimum of 10 minutes).

Evaporator Coil Temperature Protection - Heating

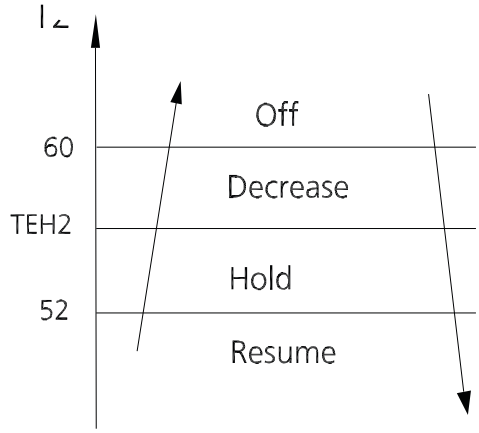

Fig. 24 —Evaporator Coil Temperature Protection

When the evaporator temperature is higher than the setting protection value, the compressor stops.

AUTO Mode

AUTO mode can be selected with the remote controller and the setting temperature can be changed between 60.0°F~86°F (16°C~30°C).

In the AUTO mode, the unit chooses either the COOLING, HEATING or the FAN-ONLY mode accT2, T4 and relative humidity.

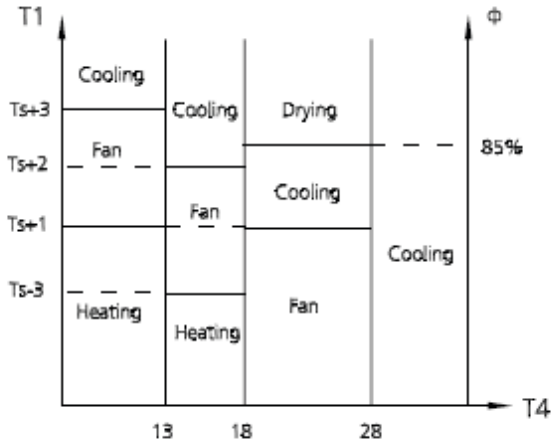

Fig. 25 —AUTO Mode

Heating*: COOLING ONLY models run at fan speed. The indoor fan runs in the AUTO fan speed for the relevant mode. The louver operates the same as in the relevant mode.

If the unit switches mode between HEATING and COOLING, the compressor repeatedly stops for a certain time and then chooses the mode according to T1-Ts. If the setting temperature is modified, the unit selects a running function again.

DRY Mode

The indoor fan speed is fixed at BREEZE and can not be changed. The louver angle is the same as in the COOLING mode.

Low Indoor Room Temperature Protection

In the DRYING mode, if the room temperature is lower than 50°F(10°C), the compressor stops and does not resume until the room temperature exceeds 53.6°F (12°C).

Evaporator anti-freezing protection, condenser high temperature protection and outdoor unit frequency limit are active and are the same as that in the COOLING mode. The outdoor fan operates the same as in COOLING mode.

FORCED OPERATION Function

Enter FORCED OPERATION Function:

When the machine is off, press the auto function button at the indoor unit to engage the Forced Auto Mode. Press TOUCH again, within 5 seconds, to engage the FORCED COOLING mode. In FORCED AUTO, FORCED COOLING or any other operation mode, press TOUCH to turn off the unit.

In the FORCED OPERATION mode, all general protections and the remote controller are available.

Operation Rules:

FORCED COOLING Mode:

The compressor runs at the F2 frequency and the indoor fan runs as a breeze. After running for 30 minutes, the unit enters the AUTO mode at a 75.2°F (24°C) setting temperature.

FORCED AUTO Mode:

The FORCED AUTO mode is the same as the normal AUTO mode with a 75.2°F (24°C) setting temperature.

AUTO-RESTART Function

The indoor unit is equipped with an AUTO-RESTART function, which is carried out through an auto-restart module. In case of a sudden power failure, the module memorizes the setting conditions before the power failure. The unit resumes the previous operation setting (not including the swing function) automatically 3 minutes after the power returns.

If the memorization condition is the FORCED COOLING mode, the unit runs in the COOLING mode for 30 minutes and enters the AUTO mode as 75.2°F (24°C) setting temp.

If the air conditioner turns off before the unit powers off and the air conditioner is required to restart immediately, the compressor delays for 1 minute when the power is on. Under other conditions, the compressor has a 3 minute delay when it restarts.

Refrigerant Leakage Detection

With this new technology, the display area displays EL0C when the outdoor

unit detects a refrigerant leak.

46°F (8°C) Heating

When the compressor is running, the indoor fan motor runs without the anti-cold air function. When the compressor is off, the indoor fan motor is off.

Defrosting Mode

The unit enters defrosting mode according to the temperature value of condenser temperature (T3) and outdoor ambient temperature (T4) as well as the compressor running time.

- In defrosting mode, the compressor continues to run, the indoor and outdoor motor will cease operation, the defrost light of the indoor unit will turn on, and the "dF " symbol is displayed.
- If any one of the following conditions is satisfied, defrosting ends and the machine switches to normal heating mode:
- Condenser temperature (T3) rises above TCDE1.
- Condenser temperature (T3) maintained above TCDE2 for 80 seconds.
- Unit runs for 15 minutes consecutively in defrosting mode.
- If Outdoor ambient temperature (T4) is lower than or equal to -7.6°F (-22°C) and compressor running time is more than TIMING_DEFROST_TIME, if any one of the following conditions is satisfied, defrosting ends and the machine switches to normal heating mode:
- Unit runs for 10 minutes consecutively in defrosting mode.
- Condenser temperature (T3) rises above 50°F/ 10°C.
- If any one of the following conditions is satisfied, the unit enters defrosting mode
- If condenser temperature (T3) or outdoor ambient temperature (T4) is lower than -3°C for 30 seconds, Ts-T1 is lower than 5°C and compressor running time is more than EE_TIME_DEFROST7_ ADD.
- If condenser temperature (T3) or outdoor ambient temperature(T4) is lower than -3°C for 30 seconds and compressor running time is more than EE_ TIME_DEFROST7_ADD+30 minutes.
- If any one of the following conditions is satisfied, defrosting ends and the machine switches to normal heating mode:
  - Condenser temperature(T3) rises above TCDE1 7.2°F/+4°C.
  - Condenser temperature(T3) maintained above TCDE2 7.2°F/+4°C for 80 seconds.
  - Unit runs for 15 minutes consecutively in defrosting mode.

Enhanced Defrost

Enhanced Defrost is a feature that is enabled by turning on dipswitch SW4 on the 24 volt ODU board. This feature is designed to be used for problem areas of defrosting (near water sources and areas of high humidity during cold outdoor conditions). When enabled, the total heating cumulative run time will be reduced to 40 minutes, allowing for defrosting to occur at the 40th minute providing the T3 or T4 temperature is 26F or cooler at that time. The defrost termination temperature at T3 will also increase to 77F to ensure better completion of defrost prior to terminating defrost.

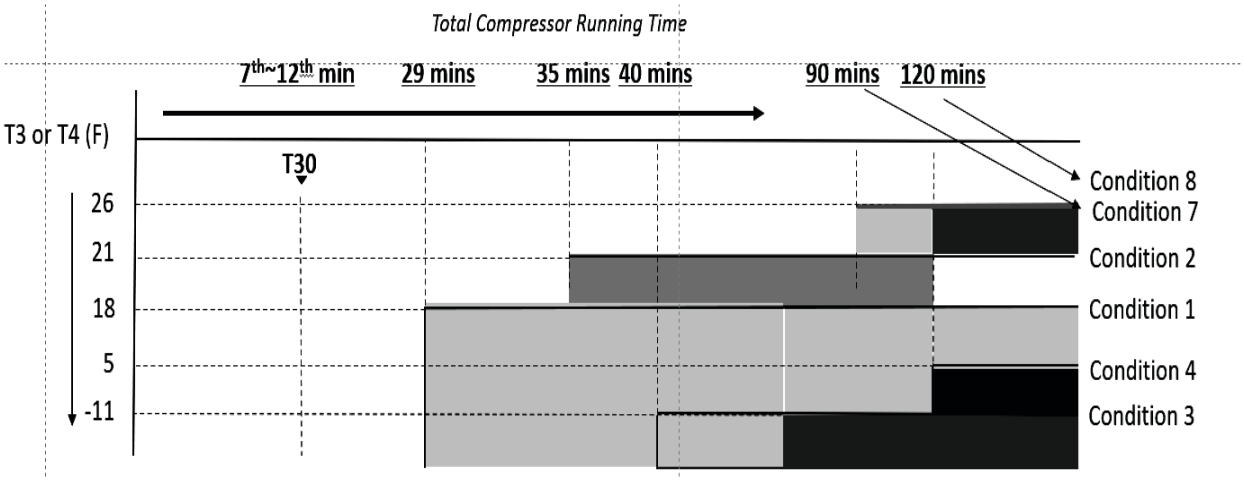

Condition 1	Total compressor running time is 29 mins	T3 ≤ 18F, and T3 is less than/equal to T30 - 4.5F (2.5C), and T4＞-8F
Condition 2	Total compressor running time is 35 mins	T3 ≤ 21F, and T3 less than/equal to T30 -5.4F (3C), and T4＞-8F
Condition 3	Total compressor running time is 29 mins	T3 ≤ -11F and last for 3 mins, and T4＞-8F
Condition 4	Total compressor running time is 120 mins	T3 ≤ 5F and T4＞-8F
Condition 5	Cumulative running 30 mins	T4-T3 > (0.5T4 + 5F) and T3 ≤ 10F, T4＞-8F
Condition 6	Cumulative running 8 hours	T4≤ -8F, with T4 operating without malfunction
Condition 7	Cumulative running time 90 mins and diff. of Ts-T1 ≤ 9F Cumulative running time 120 minutes (if Ts-T1 diff. above not applicable)	T3 or T4 ≤ 26F last for 30 seconds
*Condition 8	If enhanced defrost is ON, cumulative running time is 40 minutes (T30 does not apply) *Only applies to Crossover ODU's. Enable enhanced defrost by turning on dipswitch 4 in the ODU.	T3 or T4 ≤ 26F last for 30 seconds

** T30: After the compressor starts up, take the lowest temperature of T3 between the 7th to the 12th minute.

Defrost Exit Conditions

Any of the following conditions cancels the DEFROST mode and changes the unit's operating mode to NORMAL.

HEATING

NOTE: T3 temperature refers to the sensor reading at the time when the DEFROST mode begins.

- T3 temperature rises above 59,,aF (15,,aC).
- T3 temperature remains above 46,,aF (8,,aC) for more than 80 seconds.
- The unit has been in the DEFROST mode for 10 minutes.
- The indoor unit defrost lamp illuminates and the dF logo appears.

INQUIRY MODE

Accessing the INQUIRY Mode

⚠ CAUTION

Read and understand the function changes you wish to make in advance. Neither the indoor unit nor the remote control displays the new level of any of the changes made while in the INQUIRY mode. Be sure to document the changes you've made to the system's programming using the INQUIRY mode. Once you complete the changes and exit the INQUIRY mode, if additional changes are made to the programming, the system will not show the new previously set level(s).

For example, when you first access CODE 22, Heating Temperature Compensation, the remote control display defaults to 0. If you change it to -2, then save and exit out of the INQUIRY mode, the next time someone goes back in and accesses CODE 22, the remote's display will not display -2.

Instead it will show 0 because that's the default. If you are unsure of the previous changes, due to a lack of documentation, you could press the DOWN symbol to the maximum change range of -6, then press the UP symbol until you are back to 0, and make the new adjustments accordingly. Be sure to document the changes when you are done.

1. Simultaneously press ON/OFF and FAN SPEED for 8 seconds.
   a. The remote is now in the INQUIRY mode.
   b. The remote control remains in the INQUIRY mode for 1 minute if no other button is pressed.
   c. While in the INQUIRY Mode, the remote display cancels all icons except AUTO, COOL, DRY, HEAT and Battery Strength.
   d. The remote control digital display defaults to 0 upon entering the INQUIRY mode.
   e. In the INQUIRY mode, each digital code (from 0 to 30) is accessed by pressing the UP or DOWN arrows .
   f. The INQUIRY information appears on the high wall indoor unit display in approximately 1 second after accessing the digital code. Press OK to send as well.
   g. In the INQUIRY mode, all other buttons and operations are invalid except for UP, DOWN and OK or the operation to exit the INQUIRY mode.

Remote Controller Service Mode Functions

NOTE: While in the INQUIRY mode, refer to the following instructions to enter SERVICE mode for the applicable codes.

Below is a list of INQUIRY modes and serviceable functions.

a. Before using the remote's service functions, turn OFF the indoor unit with the remote.
b. Turn OFF the power to the outdoor unit for 2 minutes. Turn the power back ON.
c. Remove the batteries from the remote and wait for the remote screen to clear. Within 30 seconds of replacing the batteries, use UP or DOWN to scroll through the INQUIRY modes.
d. To enter the SERVICE mode for an applicable INQUIRY mode, press ON/OFF for 2 seconds.
e. After SERVICE adjustments have been made, press ON/OFF for 2 seconds to exit the SERVICE mode and return to the INQUIRY mode.
f. Once operations in the INQUIRY mode are complete, press ON/OFF and FAN SPEED for 2 seconds to exit. All buttons on the remote controller are disabled for 60 seconds
g. To ensure changes are locked, power down the outdoor unit for three (3) minutes after all the service mode changes are made.

Service Inquiry Codes

CODE	INQUIRY	INQUIRY DESCRIPTION	SERVICE/ INQUIRY	FOR SERVICE, PRESS ON/OFF FOR 2 SECONDS TO:	SELECTION GUIDE/NOTES
0		Error Code Check	SERVICE AND INQUIRY	Review error memory function. Displays "**Ch**". Press **OK** to send the query error code memory.	
1	T1	Indoor Ambient Temperature	SERVICE AND INQUIRY	Change the power off memory selection. This feature determines whether the unit memorizes the set conditions prior to a power failure. Displays **"Ch"**. Press **OK** to return the current setting. Press **UP** or **DOWN** to cycle through settings **1** and **0**.	Memory settings are off Memory settings are on
2	T2	Indoor Coil Temperature	SERVICE AND INQUIRY	Change the option to control the indoor fan operation after reaching the set temperature. Displays "**Ch**". Press **OK** to return the current setting. Press **UP** or **DOWN** to cycle through settings 1 through 11. Next, press **OK** to confirm the selection.	Stop the fan Minimum fan speed Set speed - intermittent fan-off 4 minutes/on 1 min Terminate after run time of 10 mins Terminate after run time of 15 mins Terminate after run time of 20 mins Terminate after run time of 30 mins Terminate after run time of 40 mins Terminate after run time of 50 mins Terminate after run time of 60 mins
3	T3	Outdoor Coil Temperature	SERVICE AND INQUIRY	Change the option to control the **COOLING** and **HEATING** modes available for use on the unit. Press **UP** or **DOWN** to cycle through the settings **CH**, **HH**, **CC** or **nU**. Press **OK** to confirm.	**CH** - **COOLING** and **HEATING**: **AUTO**, **COOLING**, **DRY**, **HEATING** and **FAN** modes available **HH** - **HEATING** Only: **HEATING** and **FAN** modes available **CC** - **COOLING** without **AUTO**: **COOLING**, **DRY** and **FAN** modes available **nU** - **COOLING** and **HEATING** without **AUTO**: **COOLING**, **DRY**, **HEATING** and **FAN** modes available
4	T4	Outdoor Ambient Temperature	SERVICE AND INQUIRY	Change the selection of the lowest set temperature. NOTE: Temperature range is 60°F ~ 75°F (16°C ~ 24°C). Press **UP** or **DOWN** to select temperature setting. Press **OK** to confirm.	
5	TP (T5)	Compressor Discharge Temperature	SERVICE AND INQUIRY	Change the selection of the highest set temperature. NOTE: Temperature range is 77°F ~ 86°F (25°C ~ 30°C). Press **UP** or **DOWN** to select the temperature setting. Press **OK** to confirm.	
6	FT	Compressor target frequency	INQUIRY ONLY		
7	Fr	Compressor run frequency	INQUIRY ONLY		
8	dL	Unit amperage	SERVICE AND INQUIRY	Change the static pressure selection. Displays "**Ch**". Press **OK** to return the current setting. Press **UP** or **DOWN** to cycle through settings **0** through **4** or **AF** (constant air volume test). Press **OK** to confirm.	Only available on ducted/AHU units. Refer to the ducted/AHU installation manuals for Fan performances at varying static pressures for airflow settings.
9	Uo	Unit voltage	INQUIRY ONLY		
10	Sn	Capacity test (special usage)	INQUIRY ONLY		
11	----	Not available	INQUIRY ONLY		
12	Pr	Indoor fan speed	SERVICE AND INQUIRY	Change the heating frequency lower limit selection. Displays "**Ch**". Press **OK** to return the current heating minimum frequency limit selection code. Press **UP** and **DOWN** to select the minimum heating frequency limit value. Press **OK** to confirm.	

Manufacturer reserves the right to change, at any time, specifications and designs without notice and without obligations.

CODE	INQUIRY	INQUIRY DESCRIPTION	SERVICE/ INQUIRY	FOR SERVICE, PRESS ON/OFF FOR 2 SECONDS TO:	SELECTION GUIDE/NOTES
13	Lr	Electronic Expansion Valve (EEV) opening	SERVICE AND INQUIRY	Change the maximum operating frequency of T4 Cooling Only intervals. Displays "**Ch**". Press **OK** to return the current operating frequency code of the T4 Cooling Only intervals. Press **UP** or **DOWN** to select the limit value and then press **OK**.	
14	ir	Indoor fan speed	INQUIRY ONLY		Multiple the display number by 8 to calculate the actual RPM
15	HU	Relative Humidity	INQUIRY ONLY		Available in INQUIRY mode for the high tier/new mid tier units that have an RH sensor.
16	TT	Setpoint compensation temperature	INQUIRY ONLY		
17	dT	Dust concentration (not used)	INQUIRY ONLY		
18	WIFI	Wi-Fi signal strength	INQUIRY ONLY		The value is measured in **dBm**. The display values are 0, 1, 2, 3 and 4 (4 is the highest and 0 is the lowest)
19	----	Not available	SERVICE ONLY	Change the cooling frequency upper limit selection in Hz. Displays **"Ch"**. Press **OK** to return the current frequency limit. Press **UP** or **DOWN** to select the preferred frequency upper limit value (in Hz). Press **OK** to confirm.	For example, the unit may be factory set to fluctuate between 40 and 84 Hz. If set to 50, the unit will now be limited to operating between 40 and 50 Hz.
20	oT	Indoor fan target frequency	SERVICE AND INQUIRY	Change the heating frequency upper limit selection in Hz. Displays "**Ch**"; press **OK** to return the current frequency limit. Press **UP** or **DOWN** to select the preferred frequency upper limit value (in Hz). Press **OK** to confirm.	For example, the unit may be factory set to fluctuate between 40 and 84 Hz. If set to 50, the unit is limited to operating between 40 and 50 Hz.
21	----	Cooling Temperature Compensation	SERVICE ONLY	Change the cooling temperature compensation value. Displays "**Ch**". Press **OK** to return the current temperature compensation value code. Press **UP** or **DOWN** to select the cooling temperature difference compensation value. Press **OK** to confirm.	This setting is used to adjust for temperature differences due to the height of the unit install. The offset value can be set at a range of -6° to +6°.
22	----	Heating Temperature Compensation	SERVICE ONLY	Change the heating temperature compensation value. Displays "**Ch**". Press **OK** to return the current temperature compensation value code. Press **UP** or **DOWN** to select the heating temperature difference compensation value. Press **OK** to confirm.	This setting is used to adjust for temperature differences due to the height of unit installation. The offset value can be set at a range of -6° to +6°.
23	----	Maximum Cooling Fan Speed	SERVICE ONLY	Change the maximum cooling fan speed setting as it relates to RPM. Displays "**Ch**". Press **OK** to return the current maximum cooling fan speed setting. Press **UP** or **DOWN** to select the maximum cooling fan speed. Press **OK** to confirm.	For example, the unit may be factory set to fluctuate between 300 and 1000 RPM. If set to 800, the unit is limited to operating between 300 and 800 RPM.
24	----	Minimum Cooling Fan Speed	SERVICE ONLY	Change the minimum cooling fan speed setting as it relates to RPM. NOTE: Changing this setting is not recommended as it may trigger unit protection protocols. Displays "**Ch**". Press **OK** to return the current minimum cooling fan speed setting. Press **UP** or **DOWN** to select the minimum cooling fan speed. Press **OK** to confirm.	For example, the unit may be factory set to fluctuate between 300 and 1000 RPM. If set to 500, the unit is limited to operating between 500 and 1000 RPM.

CODE	INQUIRY	INQUIRY DESCRIPTION	SERVICE/ INQUIRY	FOR SERVICE, PRESS ON/OFF FOR 2 SECONDS TO:	SELECTION GUIDE/NOTES
25	----	Maximum Heating Fan Speed	SERVICE ONLY	Change the maximum heating fan speed setting as it relates to RPM. Displays "**Ch**". Press **OK** to return the current maximum heating fan speed setting. Press **UP** or **DOWN** to select the maximum heating fan speed. Press **OK** to confirm.	For example, the unit may be factory set to fluctuate between 300 and 1000 RPM. If set to 800, the unit will now be limited to operating between 300 and 800 RPM.
26	----	Minimum Heating Fan Speed	SERVICE ONLY	Change the minimum heating fan speed setting as it relates to RPM. Note: Changing this setting is not recommended as it may trigger unit protection protocols. Displays "**Ch**". Press **OK** to return the current minimum heating fan speed setting. Press **UP** or **DOWN** to select the minimum heating fan speed. Press **OK** to confirm.	For example, the unit may be factory set to fluctuate between 300 and 1000 RPM. If set to 500, the unit is limited to operating between 500 and 1000 RPM.
27	----	Not available			
28	----	Not available			
29	----	Not available			
30	----	Not available			

To exit the Inquiry Mode:

Press and hold together the On/Off and Fan buttons for 2 seconds.

GENERAL TROUBLESHOOTING

SAFETY CAUTION

WARNING

Be sure to turn off all power supplies or disconnect all wires to avoid electric shock. While checking indoor/outdoor PCB, equip yourself with anti-static gloves or wrist strap to avoid damage to the board.

WARNING

Electricity remains in capacitors even when the power supply is off. Ensure the capacitors are fully discharged before troubleshooting.

NOTE: Remember to discharge the electrical power in capacitor.

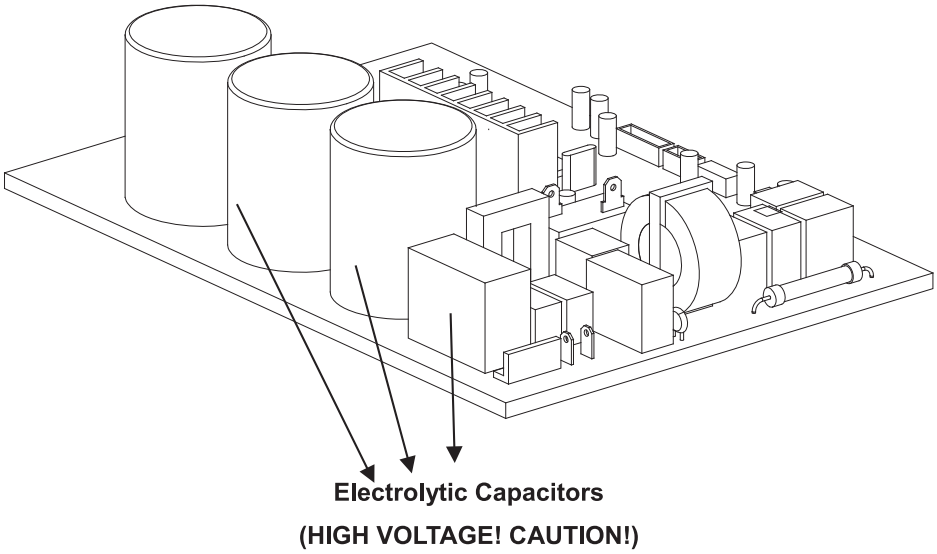

Fig. 26 —Electrolytic Capacitors

For other models, please connect discharge resistance (approximately 100ƒÇ 40W) or a soldering iron (plug) between the +, - terminals of the electrolytic capacitor on the contrary side of the outdoor PCB.

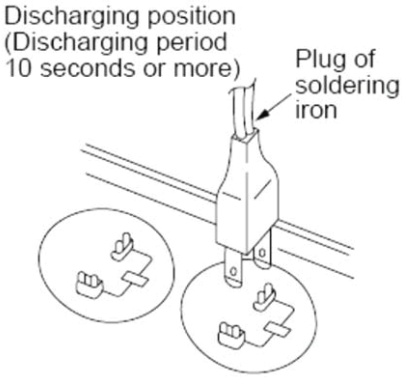

Fig. 27 —Discharge Position

NOTE: Figure is for reference only. The plug on your unit may differ.

NOTE: If using the inverter test tool for troubleshooting, shut off power, remove the electrical panel and locate the cable that is already connected to the test port on the outdoor unit. Connect the test tool to the cable with the connector provided with the test tool. After the maintenance is completed, insert the female end back into the port.

For the R454B single zone ODU with capacity less than 24K, there will be the test tool connector. For 24K HH and 30K-60K single zone ODU, there is a diagnosis/check board which has digital display on it, you can read the parameters from it directly.

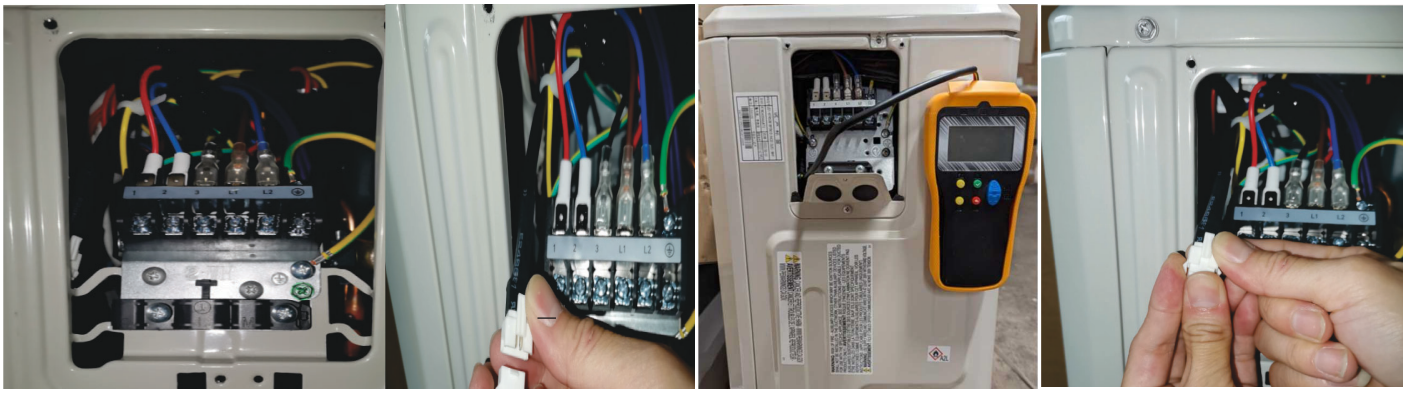

Step 1 Step 2 Step 3 Step 4

Fig. 28 —Inverter Test Tool Maintenance

Connect the Dr. SMART tool to the white terminal as shown in Step 3 above.

Fig. 29 —Dr. SMART Tool

NOTE: These pictures is for reference only. Actual appearance may vary.

ERROR CODES

Error Display

Display	Indoor/Outdoor Code	Malfunction or Protection	Solution (Refer to Page)
df	N/A	Defrosting	Normal Display, not error code
FC	N/A	Forced cooling	
EC 03 / EC 07 / EC 71	ODU	Fan speed out of control	page 30
EC 51	ODU	EEPROM parameter error	page 26
EC 52	ODU	Coil temp. sensor(T3) error	page 33
EC 53	ODU	Ambient temp. sensor(T4) error	page 33
EC 54	ODU	COMP. discharge temp. sensor (TP) error	page 33
EC 55	ODU	IPM module temperature sensor malfunction	page 35
EL 0C	IDU & ODU	System Lacks Refrigerant Diagnosis and Solution	page 36
EH 00 / EH0A	IDU & ODU	EEPROM Malfunction Error Diagnosis and Solution	page 26
EH02	IDU	Zero Crossing Detection Error	page 29
EH b3	IDU	Communication Malfunction Between Wire and Master Control	page 53
EH bA	IDU & ODU	Communication Malfunction Between Wire and Master Control	page 53
EH 3b	IDU & ODU	External Fan DC Bus Voltage is Too High	page 53
EH 06	IDU	IDU Main Control Board and Display Board Communication Error Diagnosis and Solution	page 55
EH 0E	IDU	Water-Level Alarm Malfunction Diagnosis and Solution	page 37
EH 60 / EH 61	IDU & ODU	Open circuit or Short Circuit Of Temperature Sensor	page 33
EC 57	ODU	Refrigerant pipe temperature sensor error	page 33
EC 5C	ODU	Suction Transducer Failure	page 32
EL 01	IDU & ODU	Communication error	page 27
EL 16	ODU	Communication malfunction between adapter board and ODU main board	page 56
FL 09	IDU & ODU	Mismatch between the new and old platforms diagnosis and solution	page 56
PC 00	ODU	IPM module protection	page 38
PC 02	ODU	Compressor top (or IPM) temp. protection	page 40
PC 04	ODU	Inverter Compressor Drive Error Diagnosis and Solution	page 43
PC 06	ODU	Discharge temperature protection of compressor	page 40
PC 08	ODU	Outdoor overcurrent protection	page 49
PC 0A	ODU	High temperature protection of condenser	page 50
PC 0F	ODU	PFC module protection	page 51
PC 0L	ODU	Low Ambient Temperature Protection	page 53
PC 10	ODU	Low AC voltage protection	page 52
PC 11	ODU	Main control board DC bus high voltage protection	page 52
PC 12	ODU	Main control board DC bus high voltage protection /341 MCE error	page 52
PC 03	IDU	* Pressure Protection (low or high pressure)	page 41
PC 30	ODU	System high pressure protection	page 41
PC 31	ODU	Low Pressure Protection	page 41
PC 40	ODU	Communication error between ODU main chip and compressor driven chip	page 44
PC 41	ODU	Compressor current sampling failure	page 45
PC 42	ODU	Compressor start failure of outdoor unit	page 49
PC 43	ODU	Compressor lack phase protection	page 46

Manufacturer reserves the right to change, at any time, specifications and designs without notice and without obligations.

Display	Indoor/Outdoor Code	Malfunction or Protection	Solution (Refer to Page)
PC 44	ODU	Zero speed protection	page 49
PC 45	ODU	IR chip drive failure	page 47
PC 46	ODU	Compressor speed has been out of control	page 49
PC 49	ODU	Compressor overcurrent failure	page 49
LC 06	ODU	High temperature protection of Inverter module (IPM)	page 40
PH 90	IDU & ODU	High temperature protection of evaporator	page 57
PH 91	IDU & ODU	Low temperature protection of evaporator	page 58

NOTE: PC03 Low pressure protection switch is open. Check the switch and repair or leak check the unit and recharge.

TROUBLESHOOTING BY ERROR CODE

EH 00/ EH 0A / EC 51 (EEPROM Malfunction Error Diagnosis and Solution)

Description: Indoor or outdoor PCB main chip does not receive feedback from EEPROM chip.

Recommended parts to prepare: Indoor PCB, Outdoor PCB

Troubleshooting and repair:

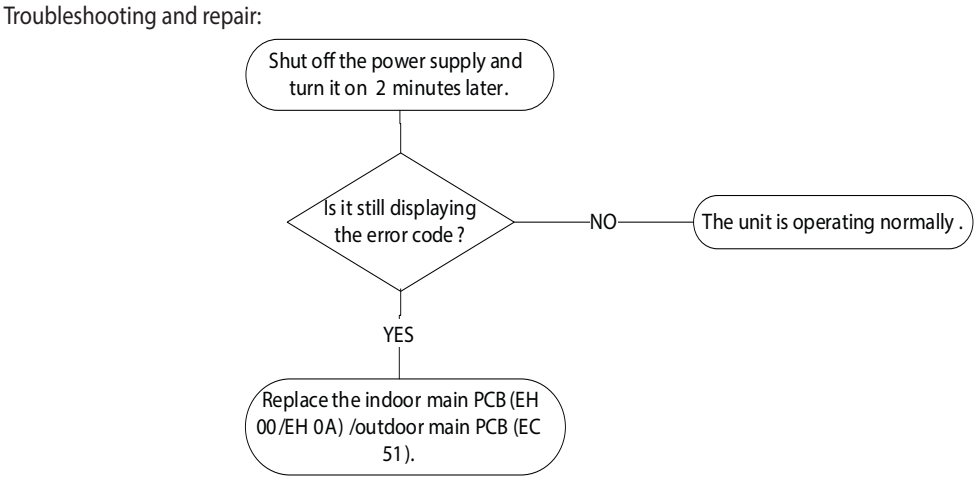

Fig. 30 —EC 51

Remarks:

EEPROM: A read-only memory whose contents can be erased and reprogrammed using a pulsed voltage.

The location of the EEPROM chip on the outdoor PCB is shown in the following image:

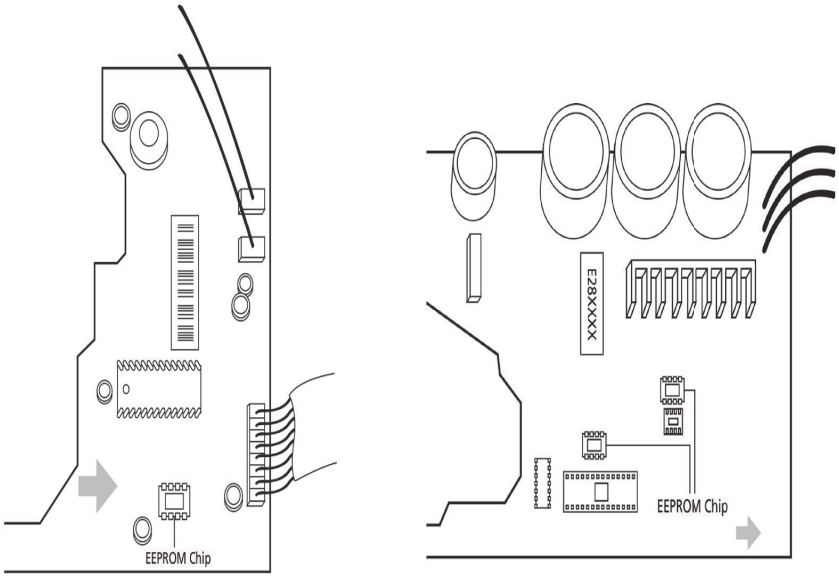

Fig. 31 —Location of EPROM Chip

NOTE: This picture is only for reference, actual appearance may vary.

IMPORTANT: Troubleshooting and repair of compressor driven chip EEPROM parameter error sand communication errors between outdoor main chip and compressor driven chip are same as EC 51.

EL 01 (Indoor and Outdoor Unit Communication Error Diagnosis and Solution)

Description: Indoor unit can not communicate with outdoor unit.

Recommended parts to prepare: Indoor PCB, Outdoor PCB

Troubleshooting and repair: Current Loop Communication loss

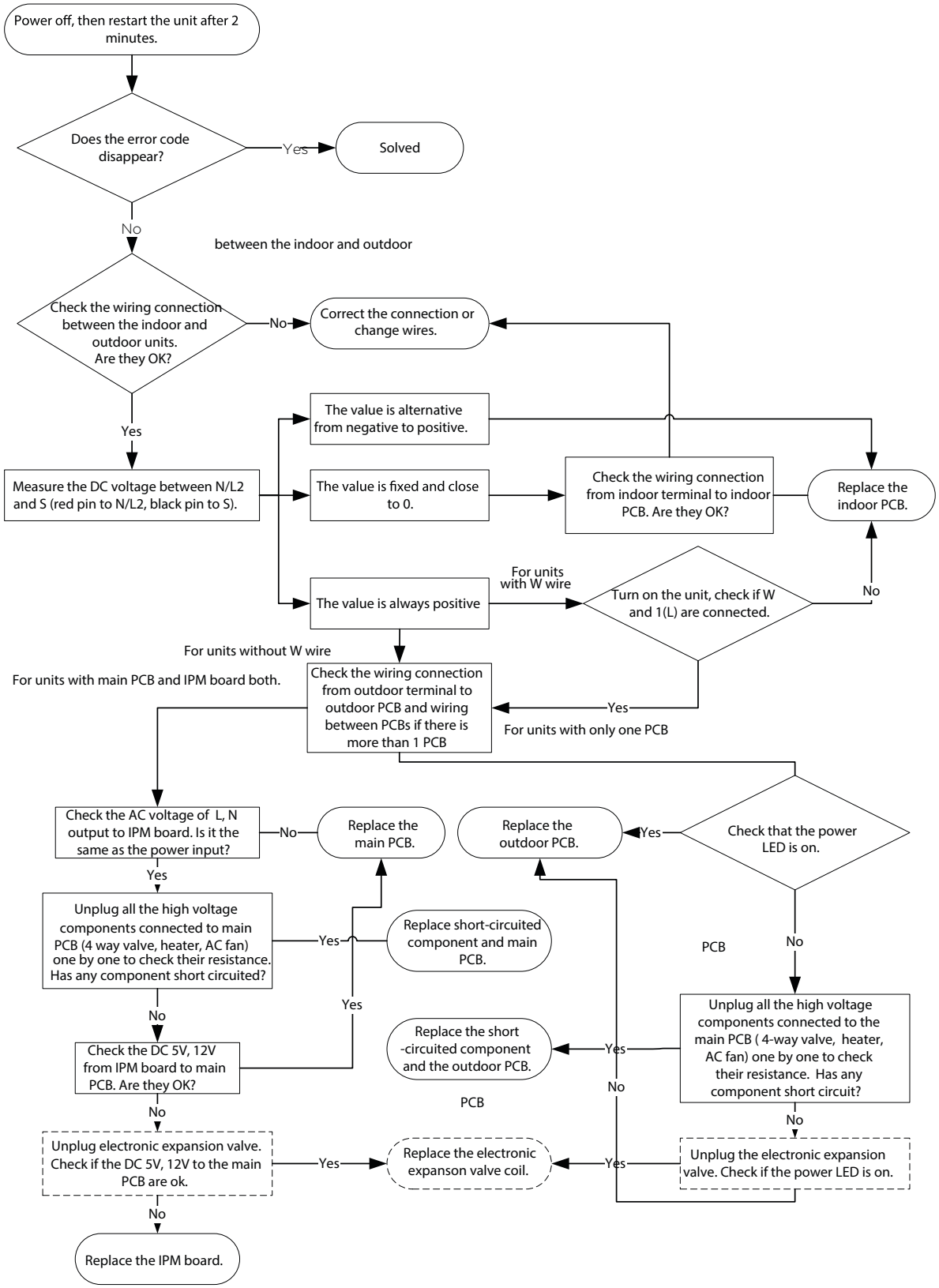

For certain models, outdoor PCB could not be removed separately. In this case, the outdoor electric control box should be replaced as a whole.

EL 01 (Continued)

Remarks:

• Use a multimeter to test the DC voltage between the 2 port (or S or L2 port) and 3 port (or N or S port) of the outdoor unit.

• The multimeter's red pin connects with the 2 port (or S or L2 port) while the black pin is for the 3 port (or N or S port). If the unit is running normally, the voltage moves alternately as positive values and negative values.

• If the outdoor unit malfunctions, the voltage remains a narrow positive value.

• If the indoor unit malfunctions, the voltage value will be fixed.

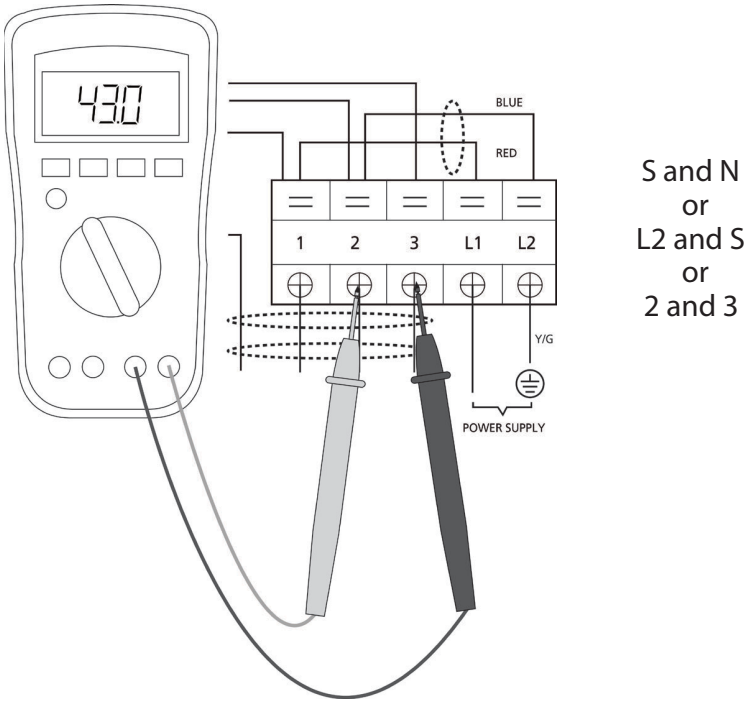

Fig. 32 —Measure Voltage Between Ports

Use a multimeter to test the reactor's resistance which does not connect with the capacitor.

• The normal value should be around zero ohm. Otherwise, the reactor has malfunctioned. Check the reactor to ensure it is not shorted to ground.

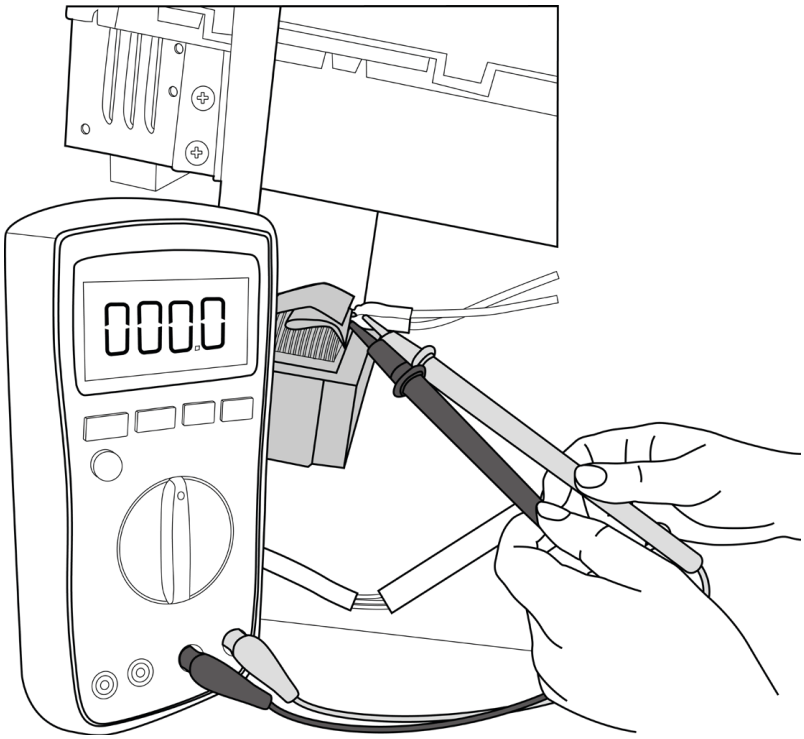

Fig. 33 —Test Reactor Resistance

EH 02 Zero Crossing Detection Error Diagnosis and Solution

Description: When the PCB does not receive a zero crossing signal feedback for 4 minutes or the zero crossing signal time interval is abnormal.

Recommended parts to repair: Connection wires, Indoor main PCB

Troubleshooting:

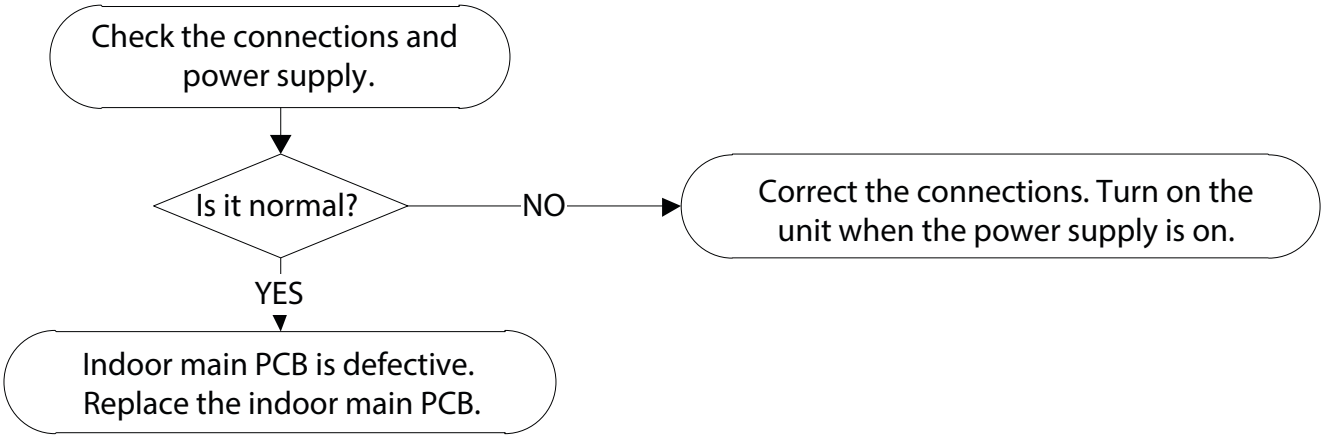

NOTE: A zero crossing detection error is only valid for a unit with an AC fan motor. For other models, this error does not apply.

EH03 / EC 07/ EC 71(Fan Speed Is Operating Outside of Normal Range Diagnosis and Solution)

Description: When indoor / outdoor fan speed keeps too low or too high for a certain time, the LED displays the failure code and the AC turns off.

Recommended parts to prepare: Connection wires, Fan assembly, Fan motor, PCB

Troubleshooting and repair:

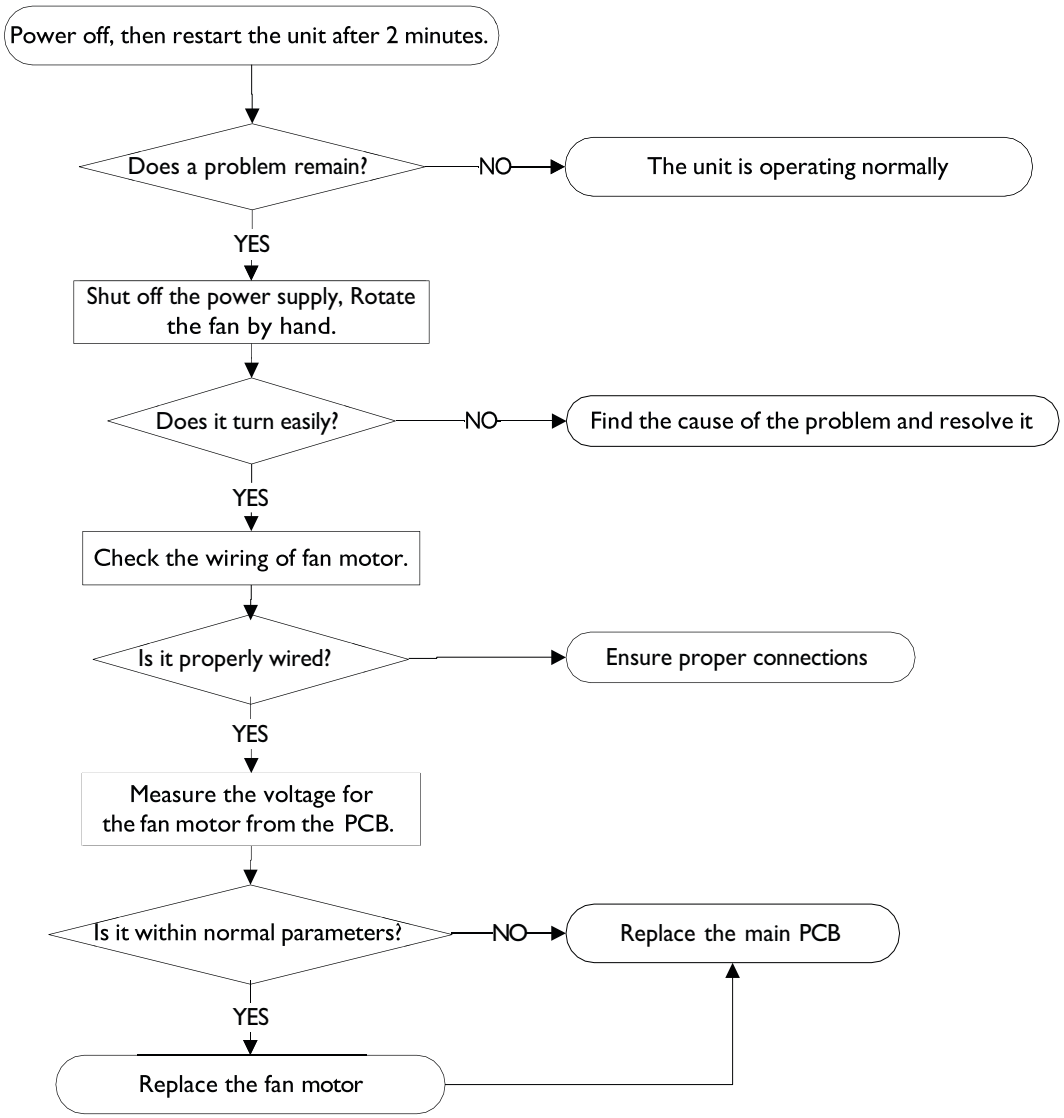

Outdoor DC Fan Motor (DC motor that controls the chip on the PCB)

1. Release the UVW connector. Measure the resistance of U-V, U-W, V-W. If the resistance is not equal to each other, the fan motor is faulty and must be replaced. Otherwise, proceed to step 2.
2. Power on the unit and when the unit is in standby, measure the pin4-5 voltage in the feedback signal connector. If the value is not 5V, change the PCB. Otherwise, proceed to step 3.
3. Rotate the fan by hand, measure the pin1-5, pin 2-5 and pin 3-5 voltage levels in the feedback signal connector. If any voltage is not in the positive voltage fluctuation, the fan motor is faulty and must be replaced.

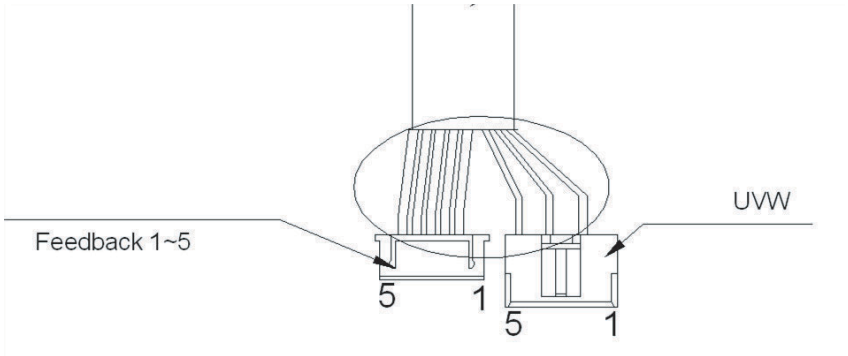

Fig. 34 —Outdoor DC Fan Motor (DC motor that controls the chip on the PCB)

NO.	1	2	3	4	5
COLOR	Orange	Grey	White	Pink	Black
SIGNAL	Hu	Hv	Hw	Vcc	GND

COLOR	Red	Blue	Yellow
SIGNAL	W	V	U

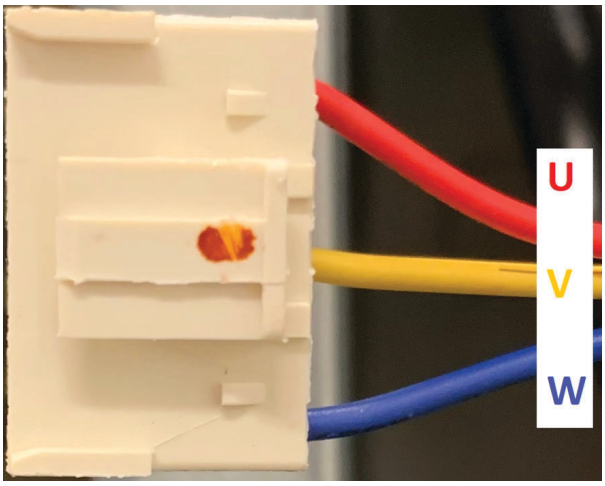

Fig. 35 —U-V-W Plug End

EC 5C (Suction Transducer is in open circuit or has short circuited) (For crossover units) diagnosis and solution

Description: If the sampling voltage is lower than 2V or higher than 254V, the LED displays the failure code.

Recommended parts to prepare:

- **Connection wires**
- **Sensor**
- **Outdoor PCB**

Troubleshooting and repair:

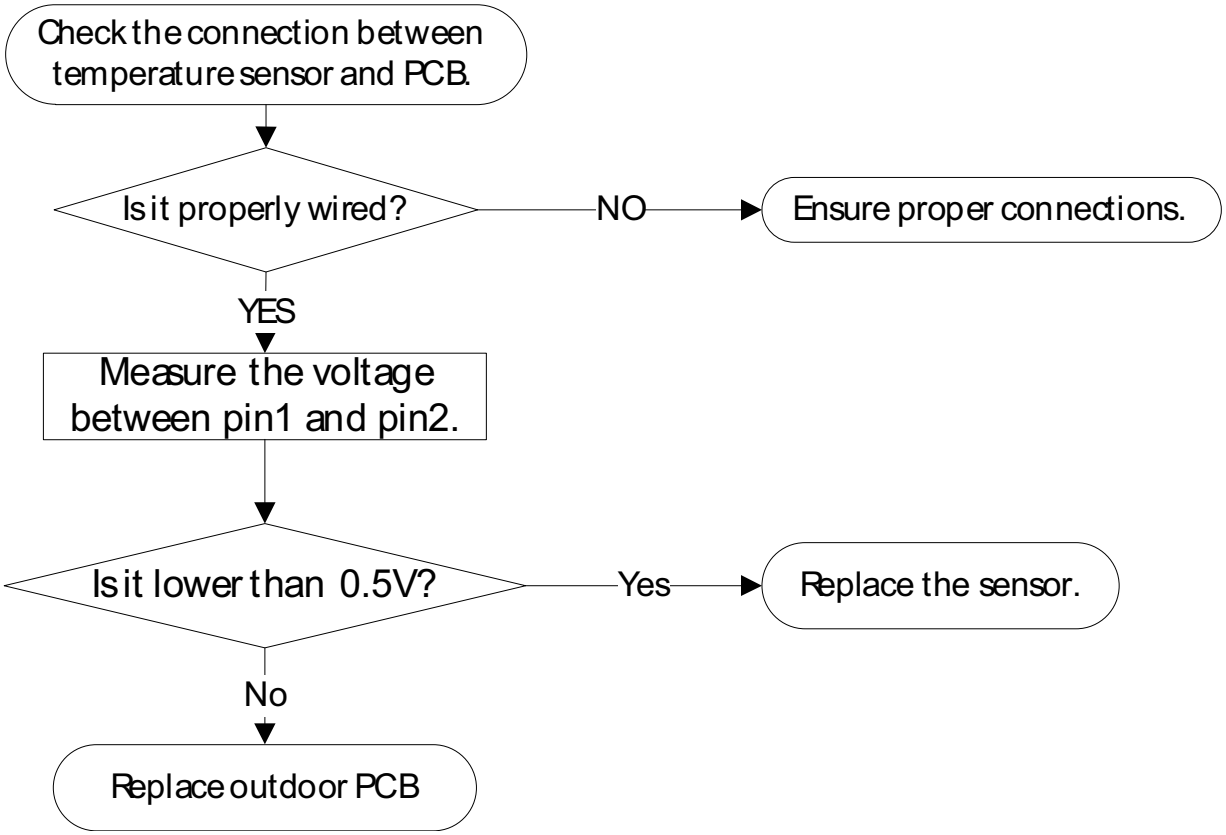

EC 53/ EC 52/ EC 54/ EC 56/ EC 57/ EC 50/ EH 60/ EH 61(Open Circuit or Short Circuit of Temperature Sensor Diagnosis and Solution)

Description: If the sampling voltage is lower than 0.06V or higher than 4.94V, the LED displays the failure.

Recommended parts to prepare: Connection wires, Sensors, PCB

Troubleshooting and repair:

Refer to Appendix, page 85.

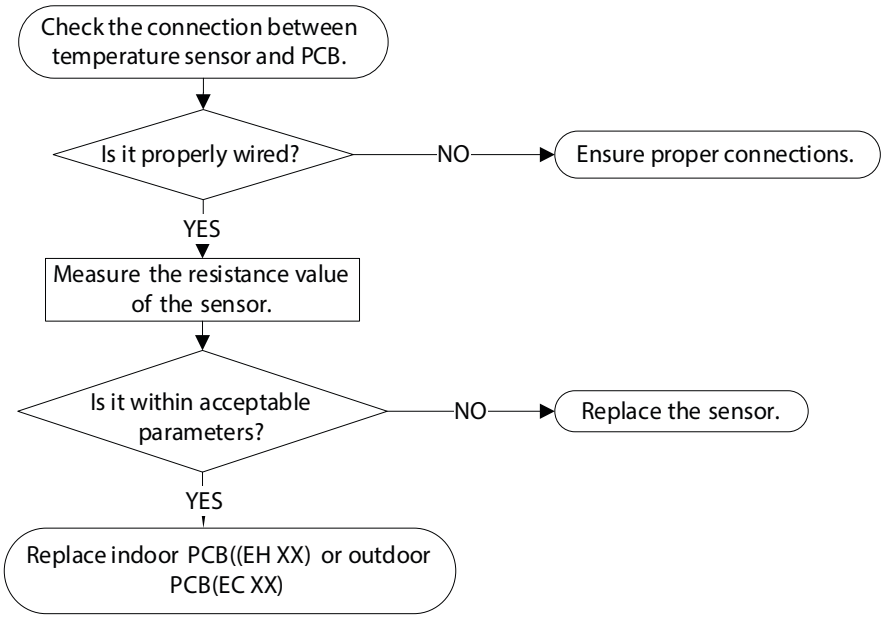

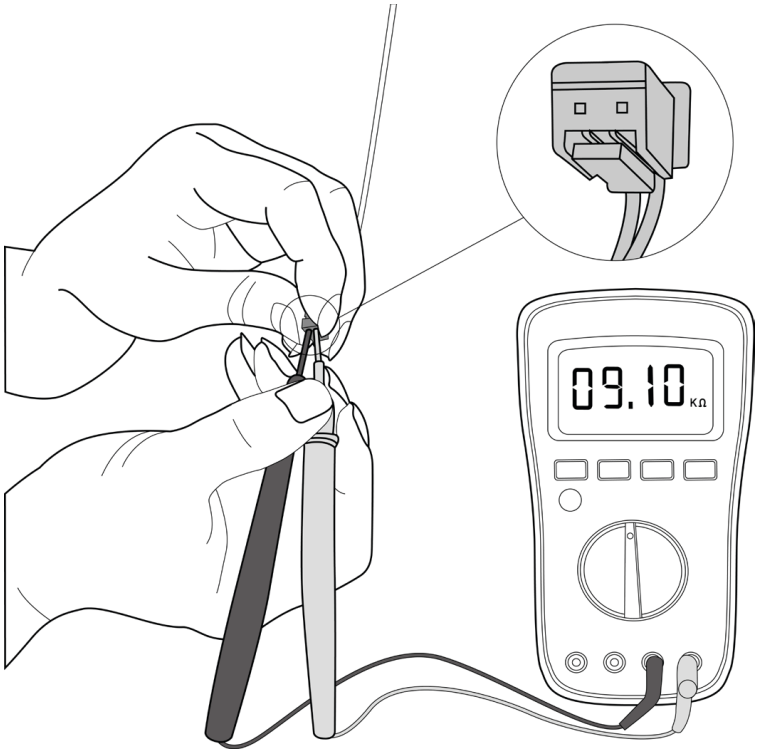

NOTE: This picture and the value are only for reference, actual appearance and value may vary.

EC 72 Lack phase failure of ODU DC fan motor diagnosis and solution

Description: When the three-phase sampling current of the DC motor is abnormal, especially when the current of one or more phases is always small and almost 0, the LED displays the failure code.

Recommended parts to prepare: Connection wire, Fan motor, Outdoor PCB

Troubleshooting and repair:

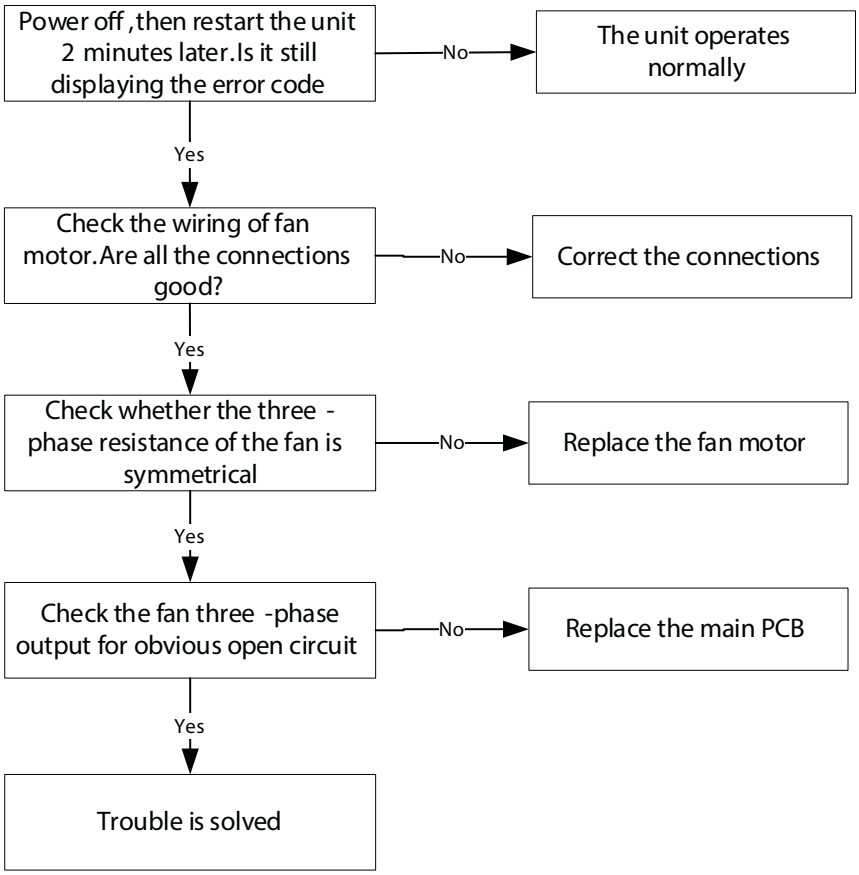

EC 55 (ODU IPM module temperature sensor malfunction diagnosis and solution)

Description: If the sampling voltage is 0V or 5V, the LED displays the failure code.

Recommended parts to prepare:

- **IPM module PCB**
- **Connection wires**
- **Sensors**
- **Outdoor main PCB**

Troubleshooting and repair: If the radiator has no sensor, follow the steps below to resolve:

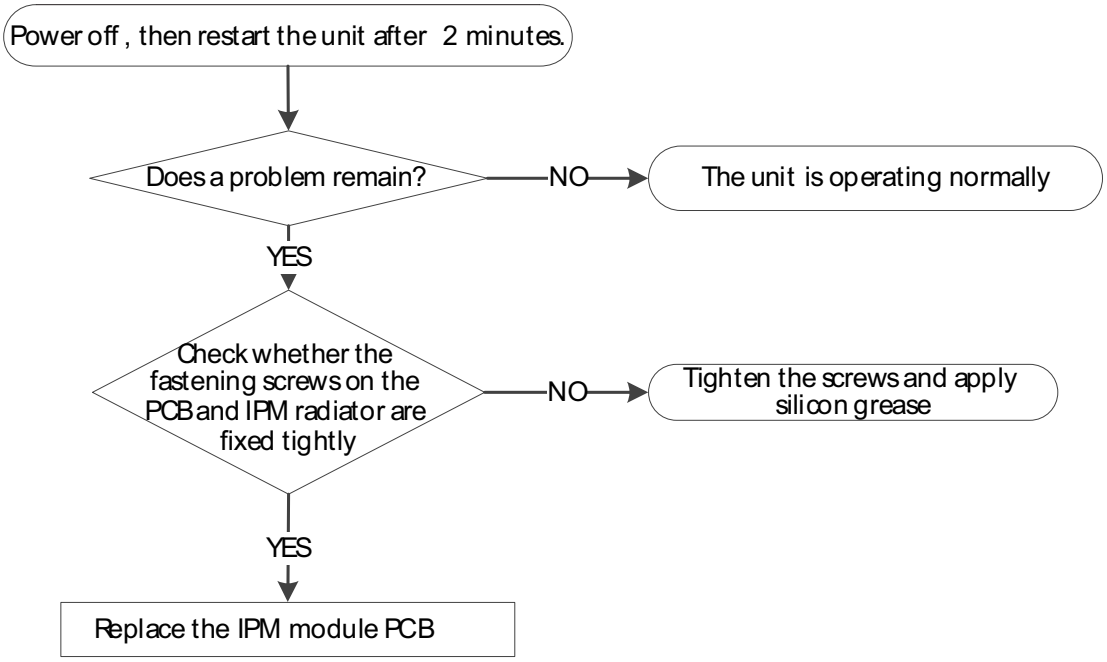

If the radiator has a sensor(TH), follow the steps below:

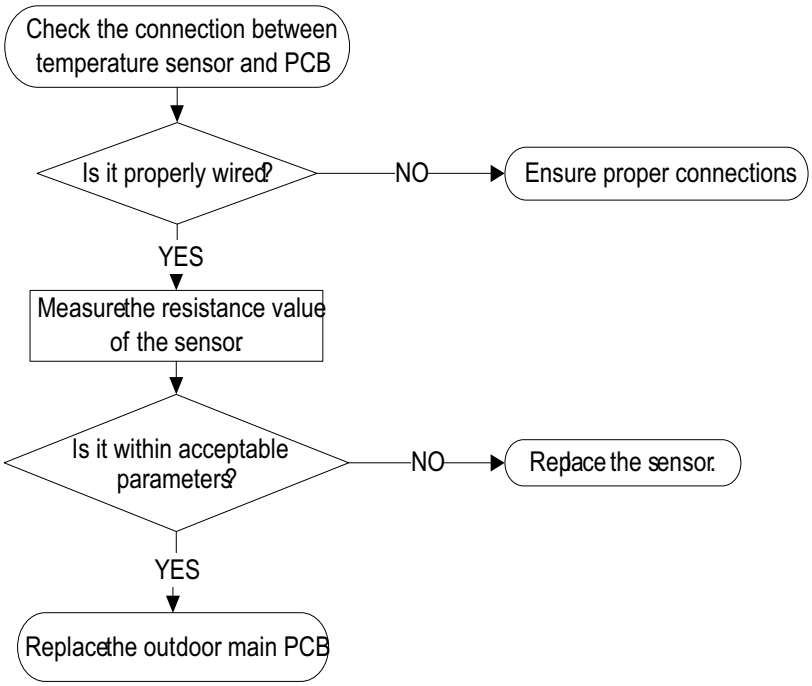

EL 0C (System Lacks Refrigerant Diagnosis and Solution)

Description: Judging the abnormality of the refrigeration system according to the number of compressor stops and the changes in operating parameters caused by excessive exhaust temperature.

Recommended parts to prepare: Indoor PCB, Additional refrigerant

Troubleshooting and repair:

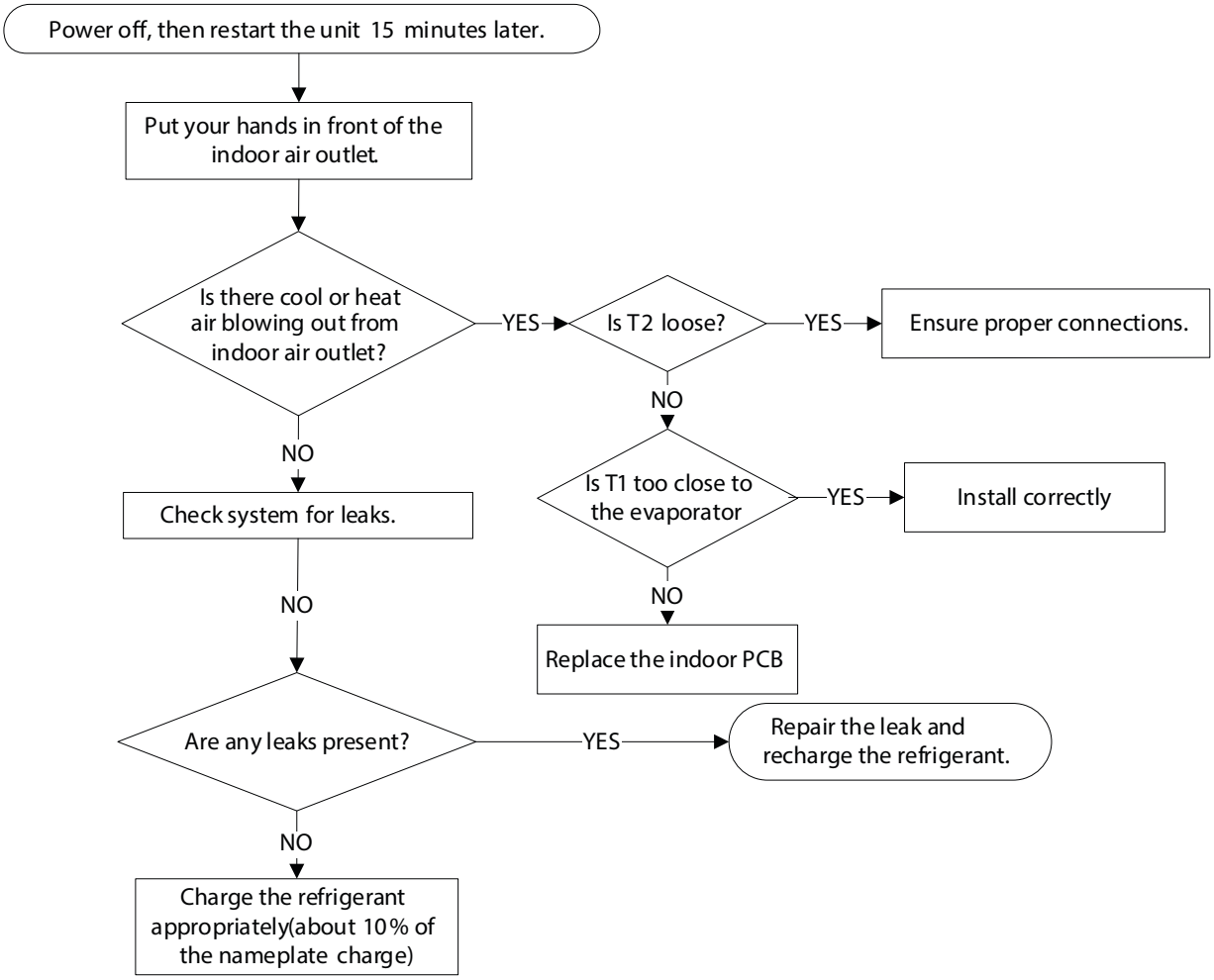

EH 0E (Water-Level Alarm Malfunction Diagnosis and Solution)

Description: If the sampling voltage is not 5V, the LED displays the failure code.

Recommended parts to prepare: Connection wires, Water-level switch, Water pump, Indoor PCB

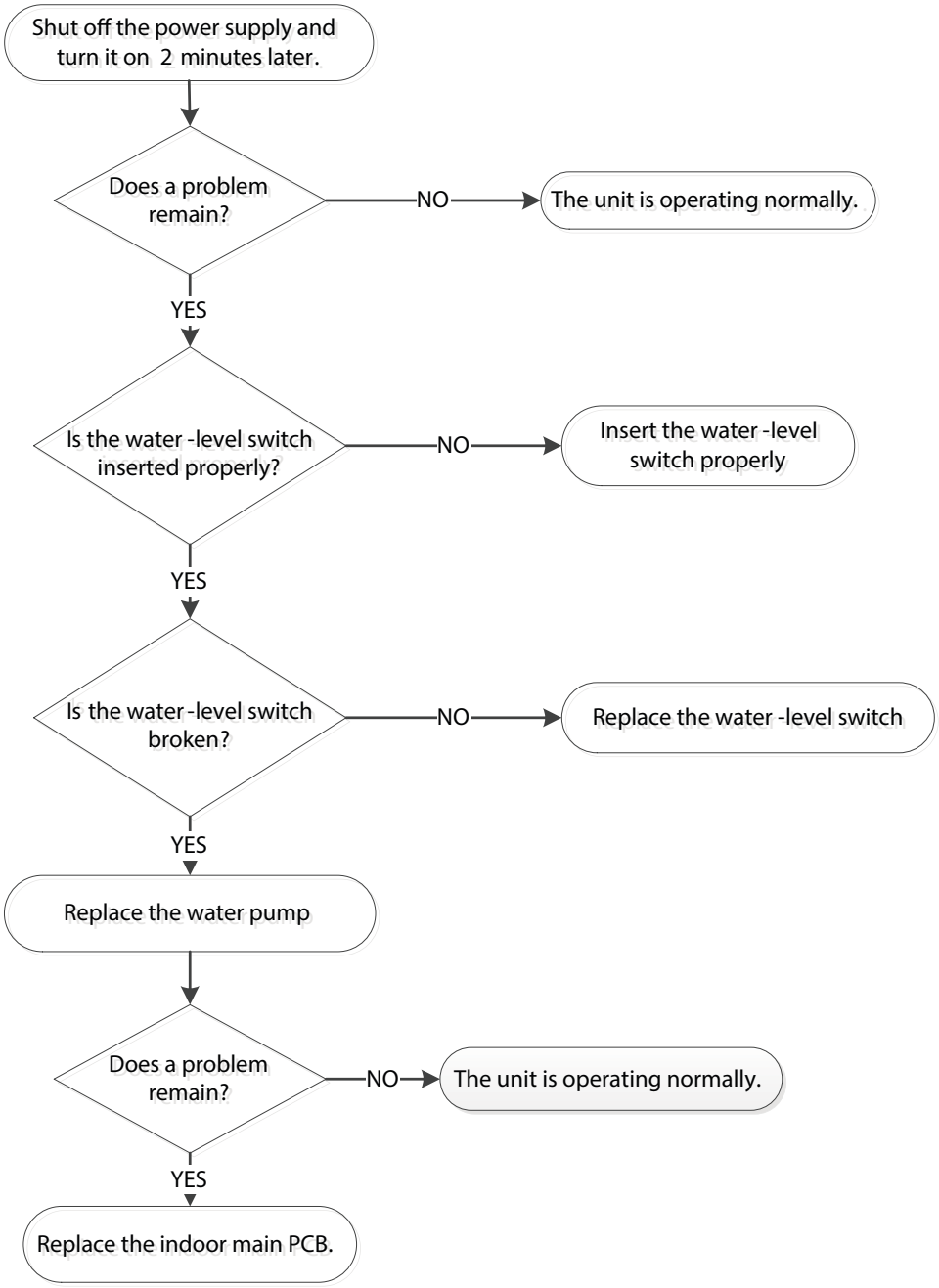

PC 00 (ODU IPM Module Protection Diagnosis and Solution)

Description: When the voltage signal the IPM sends to the compressor drive chip is abnormal, the display LED shows "PC 00" and the AC turn off.

Recommended parts to prepare: Connection wires, IPM module board, Outdoor fan assembly, Compressor, Outdoor PCB

Troubleshooting and repair:

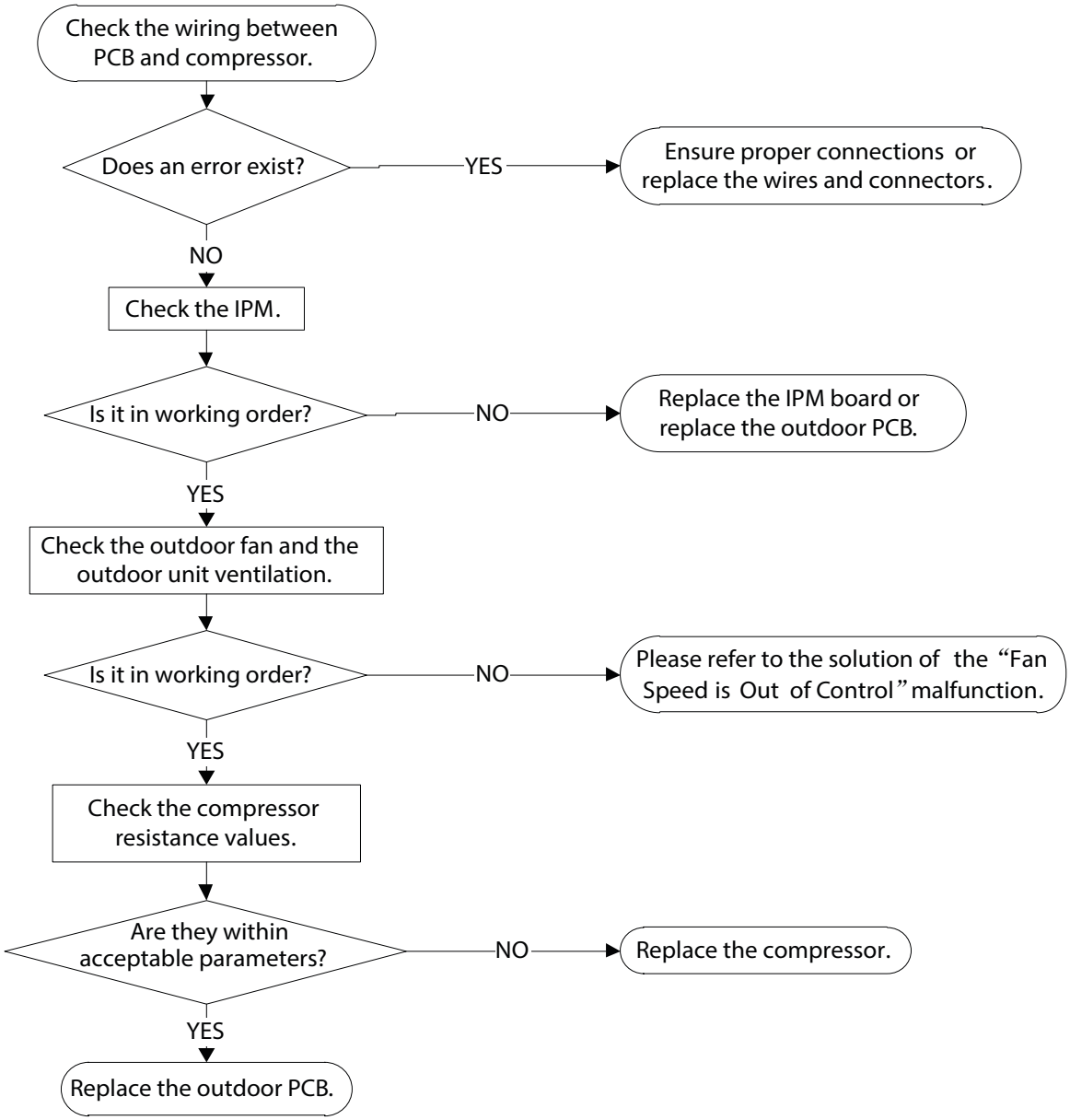

NOTE: For certain models, the outdoor PCB can not be removed separately. In this case, the outdoor electric control box should be replaced as a whole.

PC 10 / PC 11 / PC 12 (ODU Voltage Protection Diagnosis and Solution)

PC 10 (Outdoor unit low AC voltage protection) / PC 11 (Outdoor unit main control board DC bus high voltage protection) / PC 12 (Outdoor unit main control board DC bus high voltage protection/341 MCE error) Diagnosis and Solution)

Description: Abnormal increases or decreases in voltage are detected by checking the specified voltage detection circuit.

Recommended parts to prepare: Power supply wires, IPM module board, PCB, Reactor

Troubleshooting and repair:

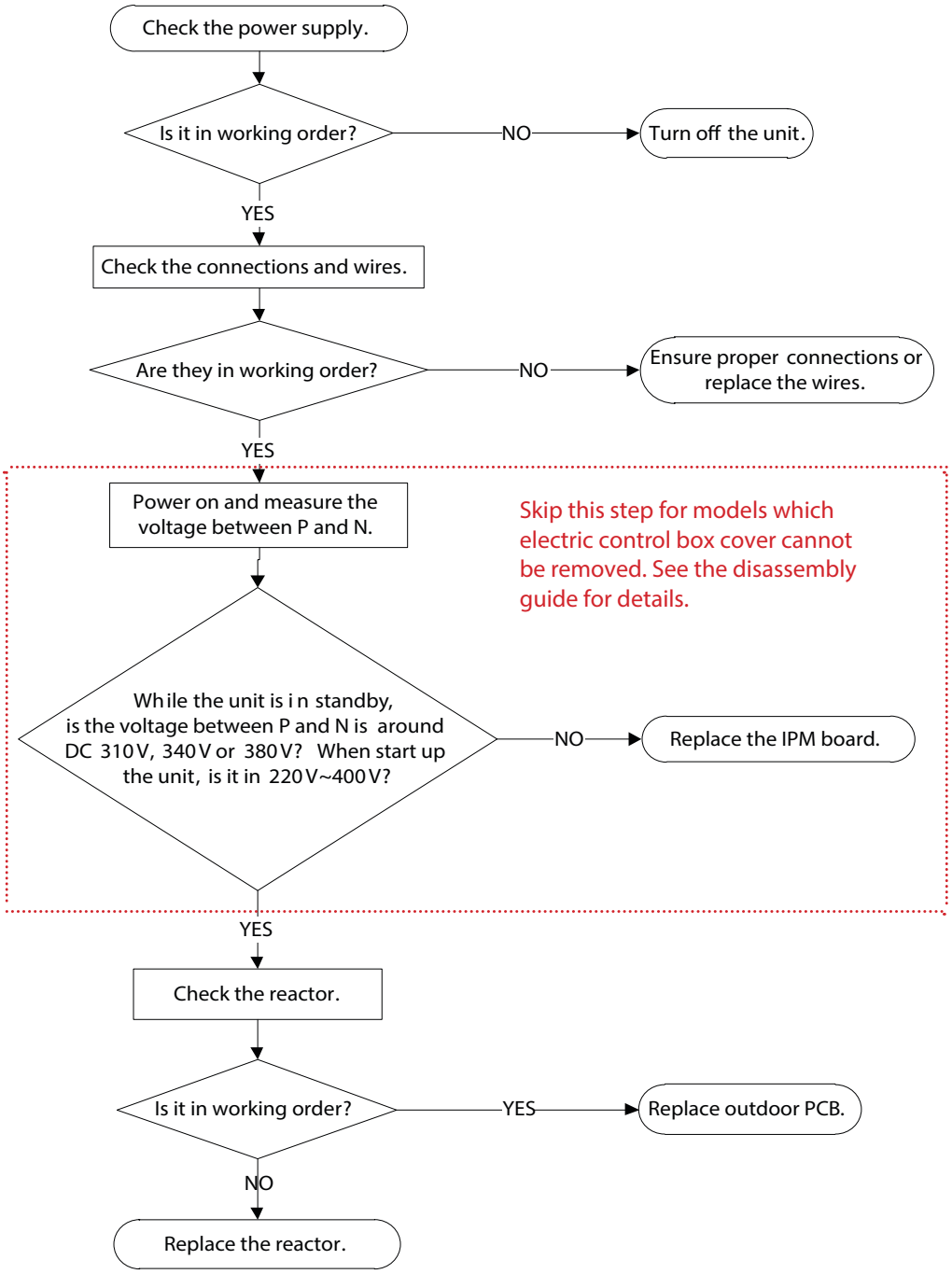

NOTE: For certain models, the outdoor PCB cannot be removed separately. In this case, the outdoor electric control box should be replaced as a whole.

PC 02 / LC 06 (Compressor Top (or IPM) Temp. Protection Diagnosis and Solution)

Description: **For some models with overload protection, If the sampling voltage is not 5V, the LED will display the failure. If the temperature of IPM module is higher than a certain value, the LED displays the failure code.**

Recommended parts to prepare: Connection wires, Outdoor PCB, IPM module board, High pressure protector, System blockages

Troubleshooting and repair:

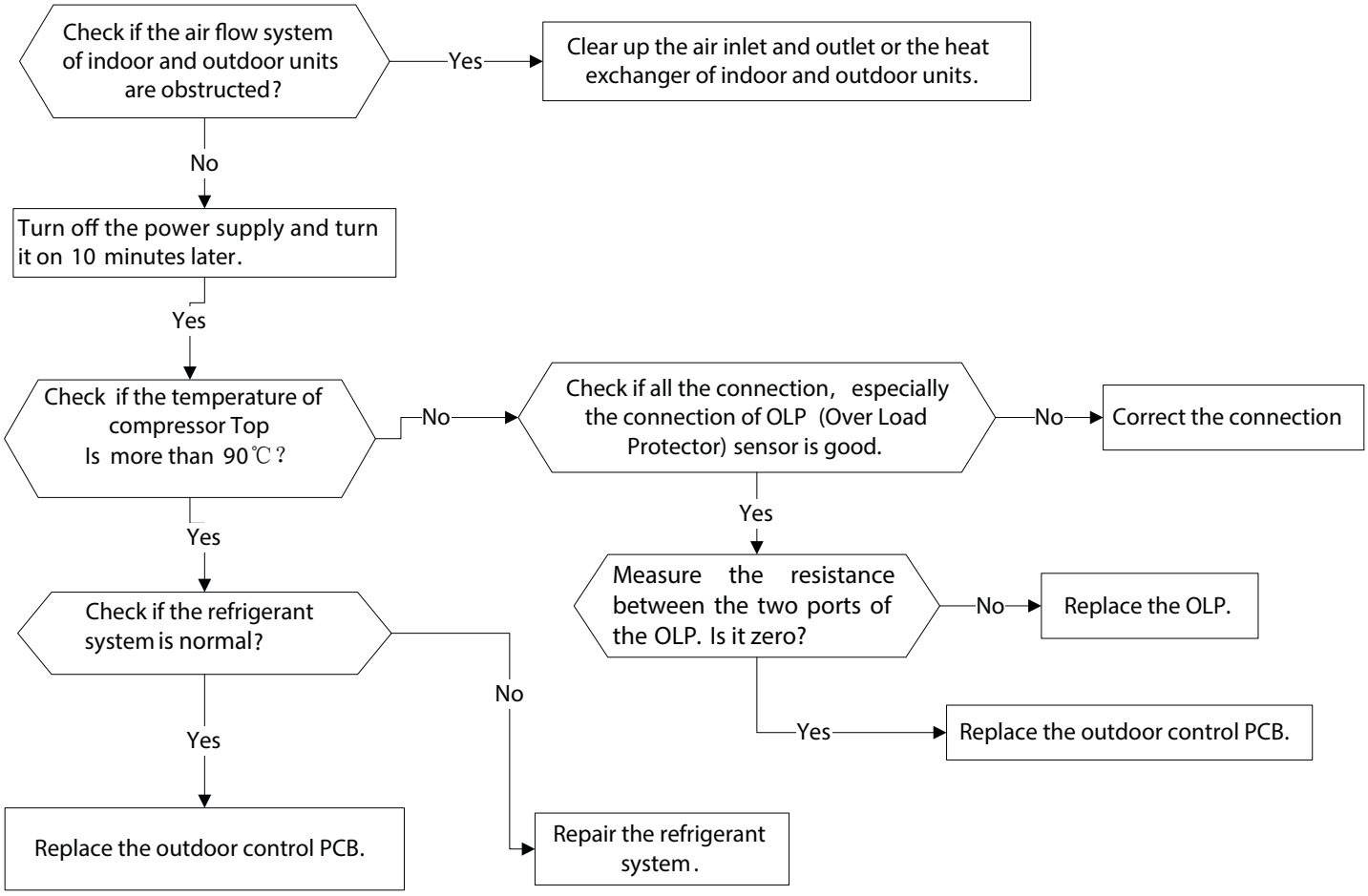

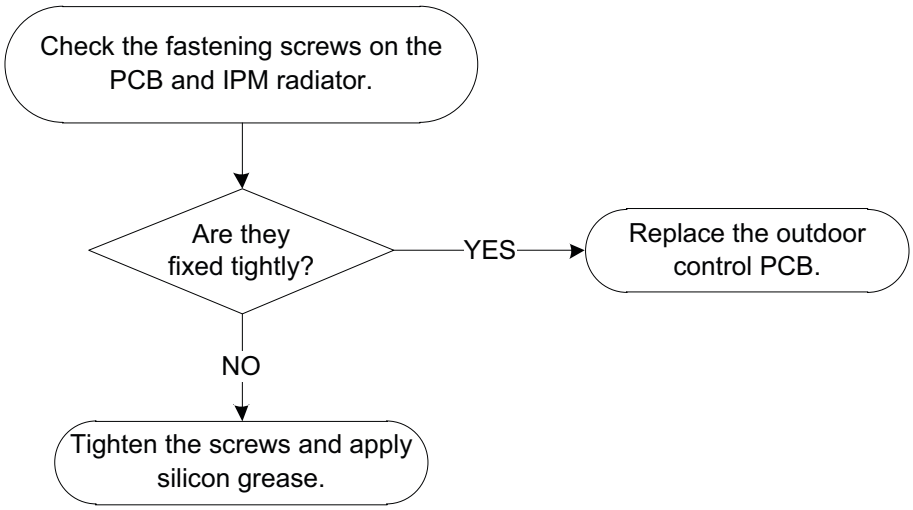

PC 03 Pressure Protection (low or high pressure), PC 30 High Pressure Protection, PC 31 Low Pressure Protection (Diagnosis and Solution)

Description: Outdoor pressure switch cut off the system because high pressure is higher than 4.4 MPa or outdoor pressure switch cut off the system because low pressure is lower than 0.13 MPa, the LED displays the failure code.

Recommended parts to prepare: Connection wires, Pressure switch, Outdoor fan, Outdoor main PCB, Refrigerant

Troubleshooting and repair:

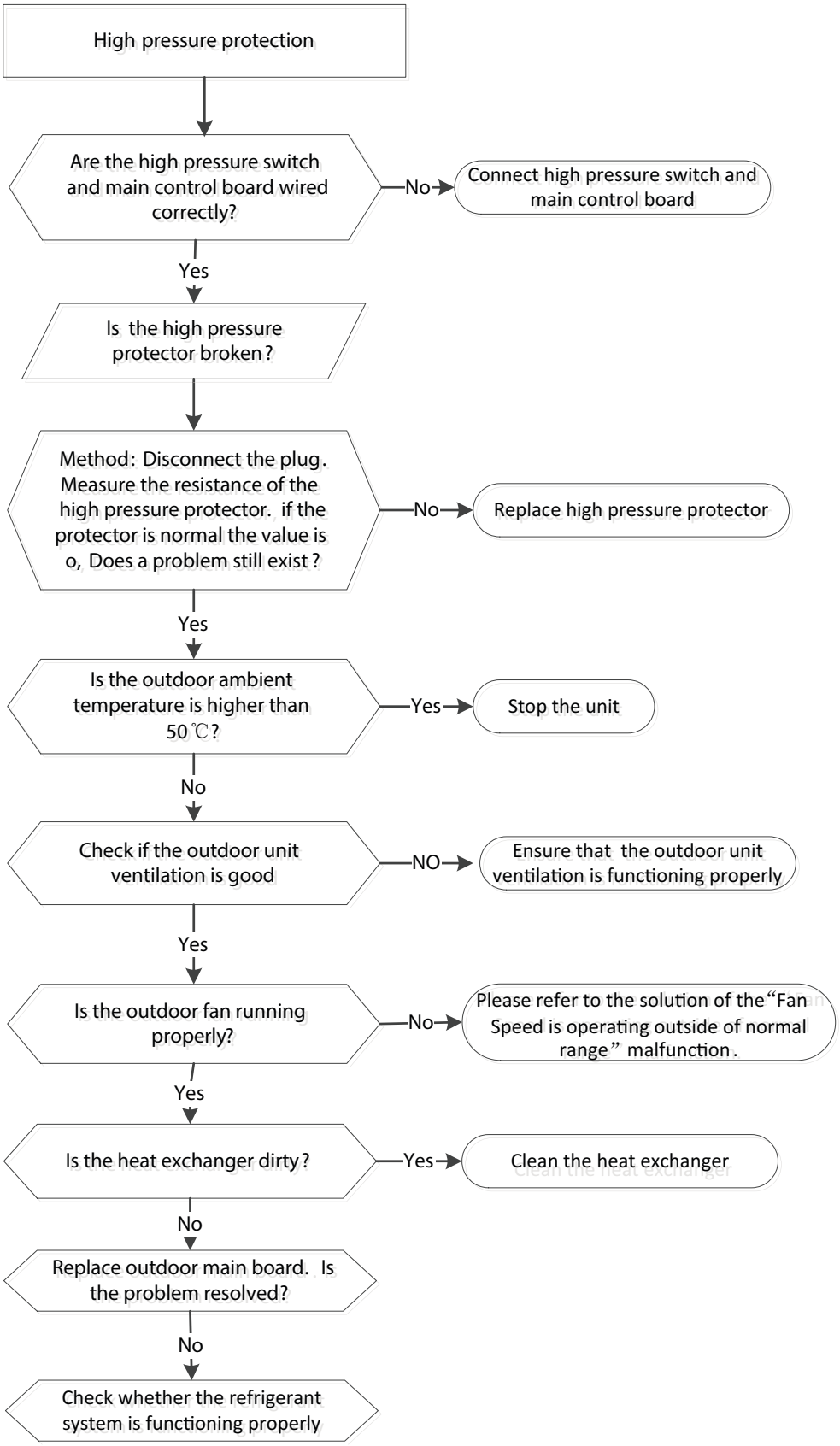

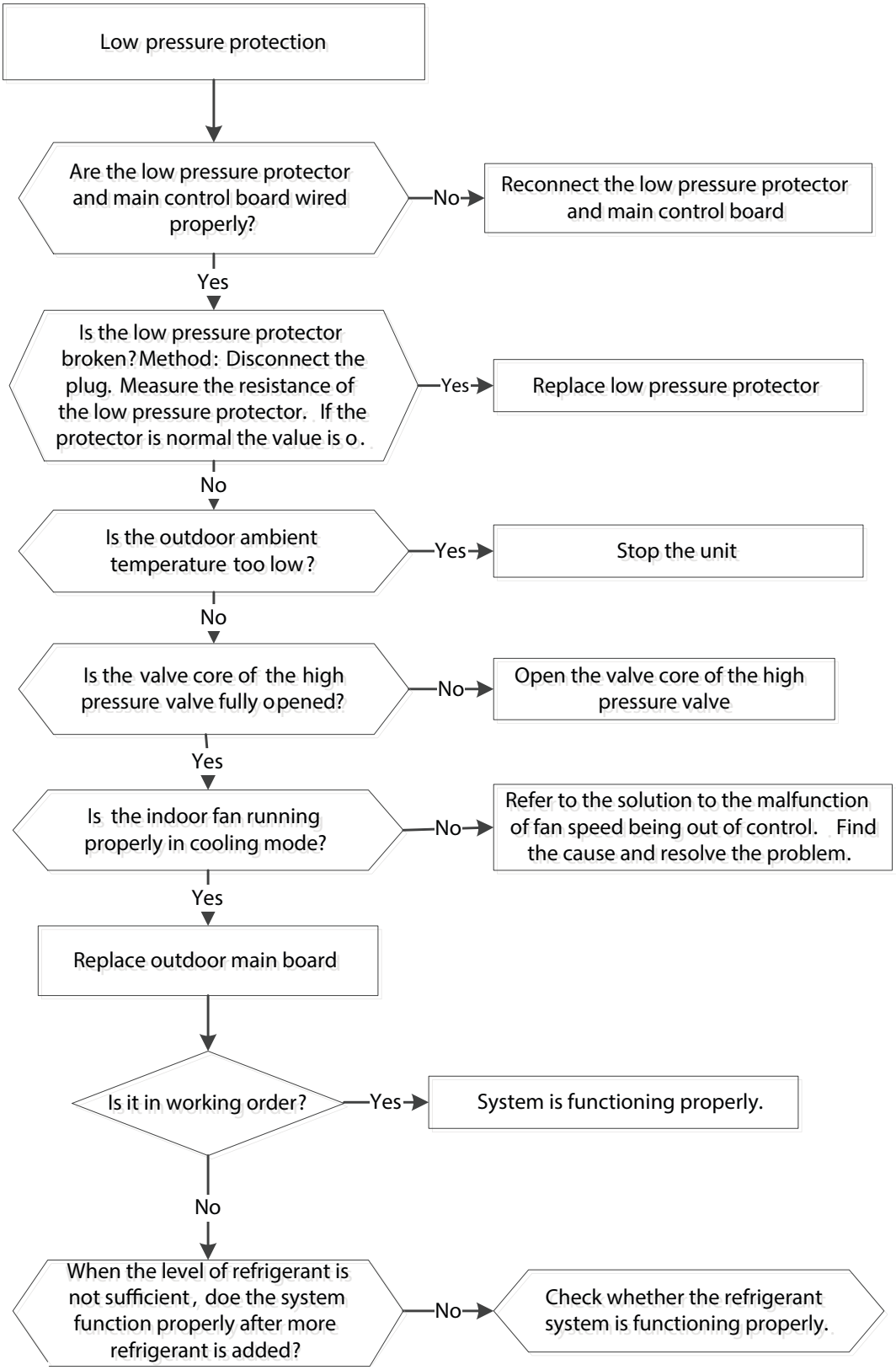
Low pressure protection
Are the low pressure protector and main control board wired properly?
No
Reconnect the low pressure protector and main control board
Yes
Is the low pressure protector broken? Method: Disconnect the plug. Measure the resistance of the low pressure protector. If the protector is normal the value is o.
Yes
Replace low pressure protector
No
Is the outdoor ambient temperature too low?
Yes
Stop the unit
No
Is the valve core of the high pressure valve fully opened?
No
Open the valve core of the high pressure valve
Yes
Is the indoor fan running properly in cooling mode?
No
Refer to the solution to the malfunction of fan speed being out of control. Find the cause and resolve the problem.
Yes
Replace outdoor main board
Is it in working order?
Yes
System is functioning properly.
No
When the level of refrigerant is not sufficient, doe the system function properly after more refrigerant is added?
No
Check whether the refrigerant system is functioning properly.

PC 04 (Inverter Compressor Drive Error Diagnosis and Solution)

Description: An abnormal inverter compressor drive is detected by a special detection circuit, including communication signal detection, voltage detection, compressor rotation speed signal detection and so on.

Recommended parts to prepare: Connection wires, IPM module board, Outdoor fan assembly, Compressor, Outdoor PCB

Troubleshooting and repair:

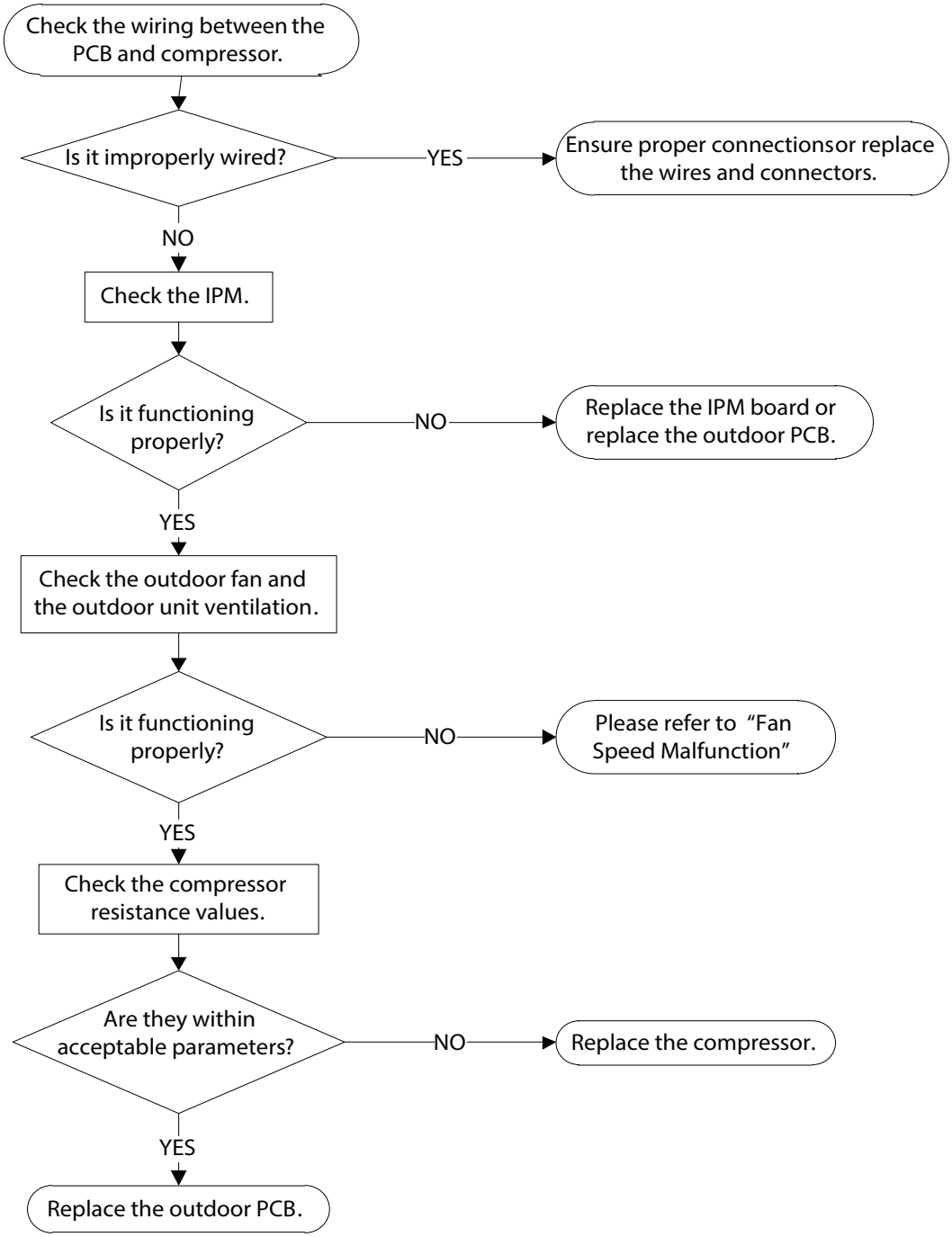

PC 40 (Communication error between ODU main chip and compressor driven chip diagnosis and solution)

Description: The main PCB cannot detect the IPM board.

Recommended parts to prepare: Connection wires, Outdoor PCB, IPM module board, Electric control box

Troubleshooting and repair:

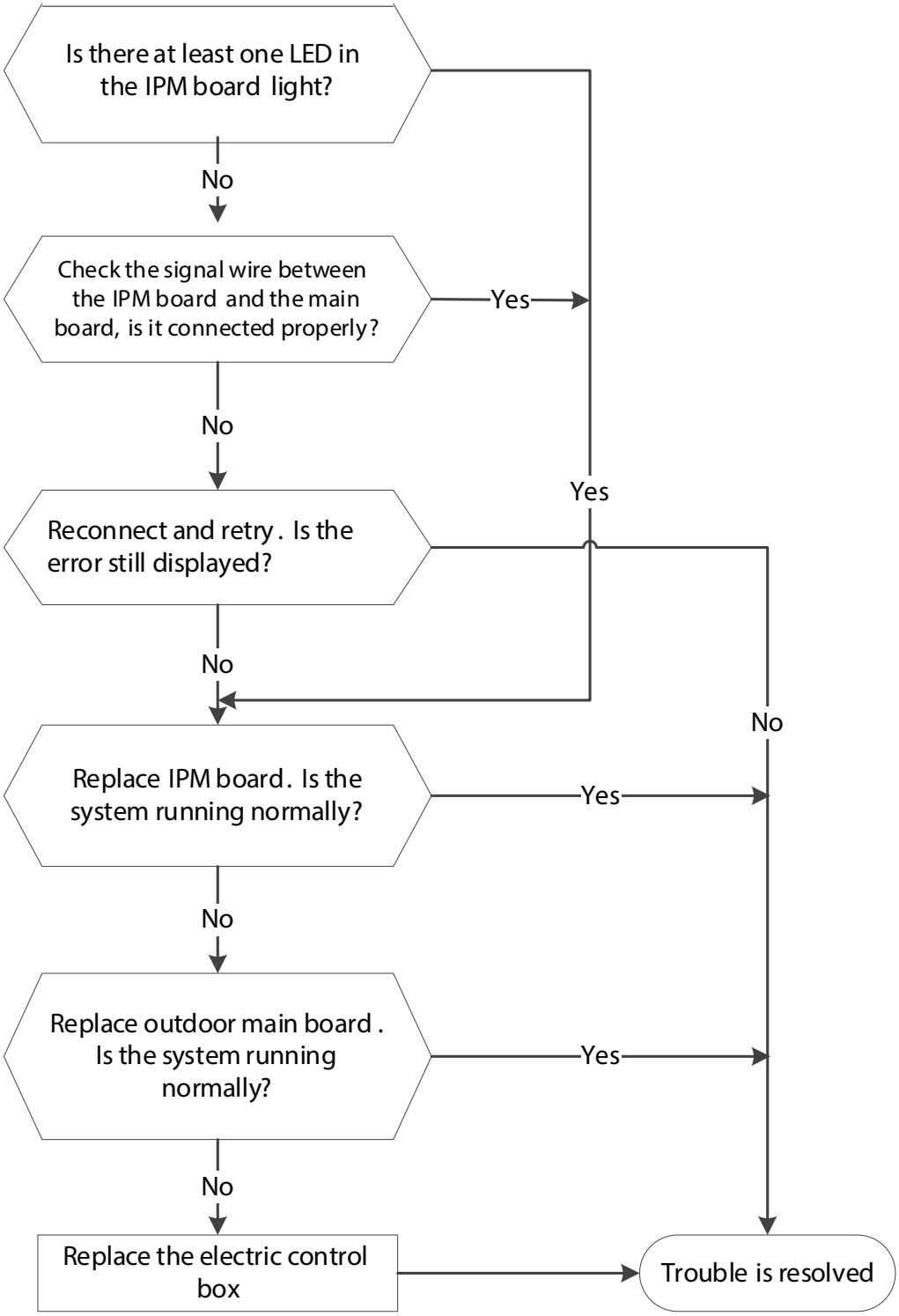

PC 41 (Outdoor compressor current sampling circuit failure diagnosis and solution)

Description: Three-phase sampling offset voltage error, the static bias voltage is normally 2.5V.

Recommended parts to prepare: Outdoor main PCB

Troubleshooting and repair:

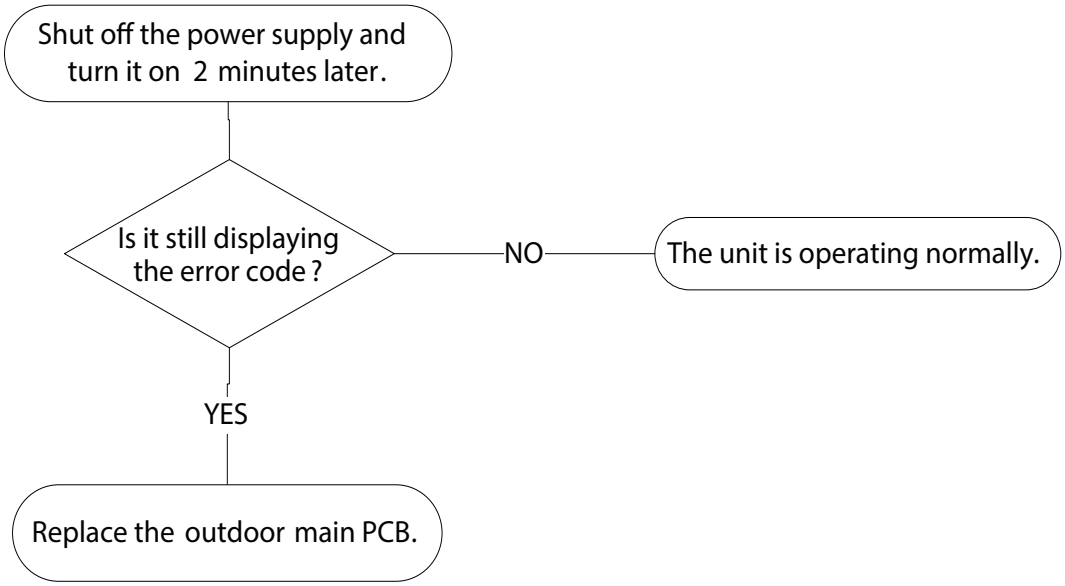

PC 43 (ODU compressor lack phase protection diagnosis and solution)

Description: When the three-phase sampling current of the compressor is abnormal, especially when the current of one or more phases is always small and almost 0, the LED displays the failure code.

Recommended parts to prepare: Connection wire, Compressor, Outdoor PCB

Troubleshooting and repair:

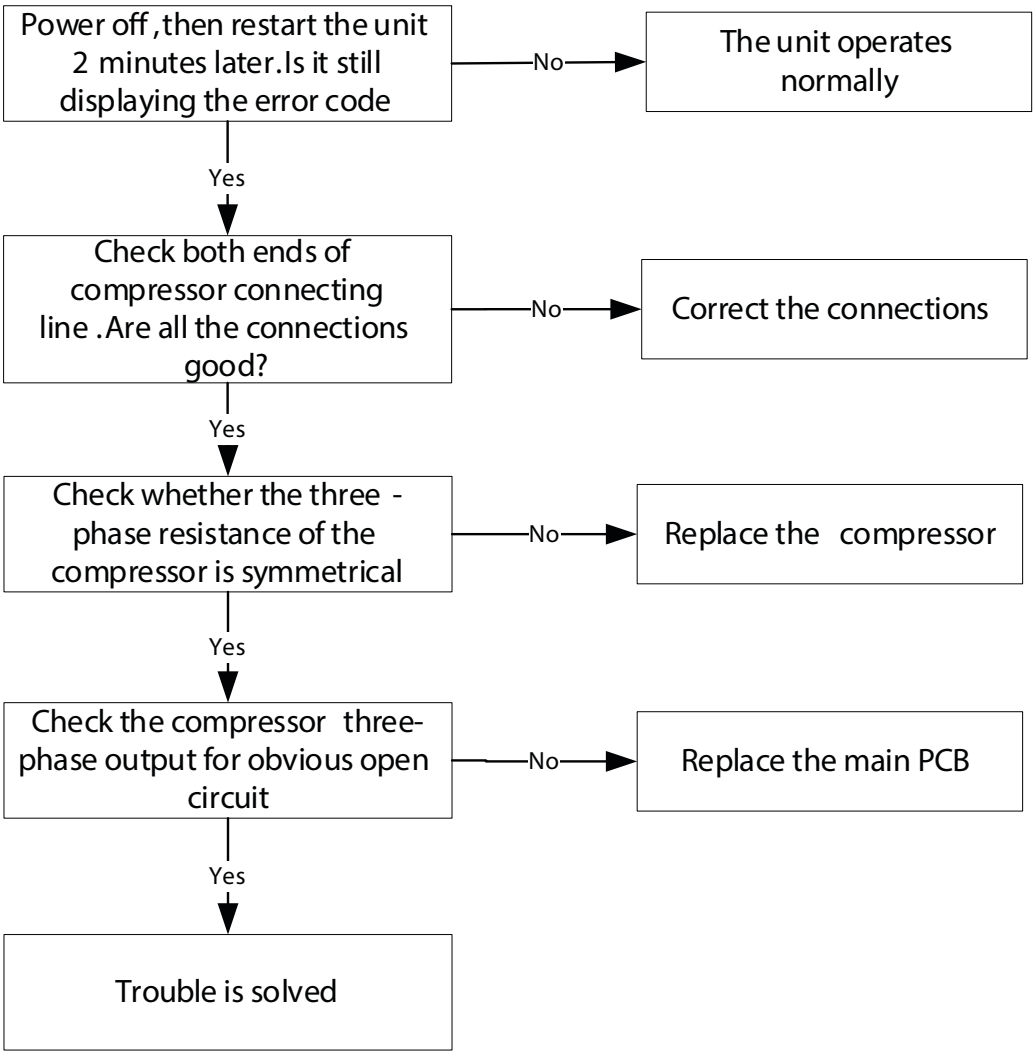

PC 45 (ODU IR chip drive failure diagnosis and solution)

Description: When the IR chip detects its own parameter error, the LED displays the failure code when power on.

Recommended parts to prepare: Inverter module PCB.

Troubleshooting and repair:

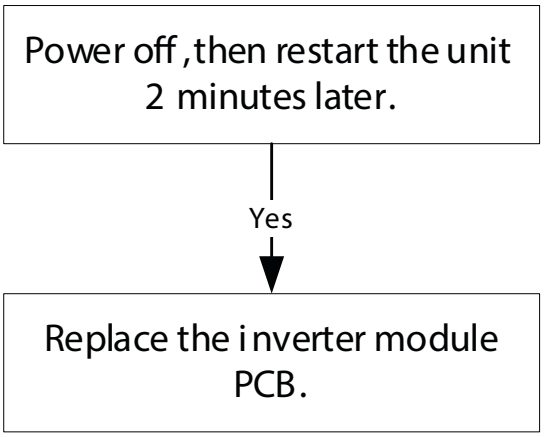

PC 06 (Discharge temperature protection of compressor diagnosis and solution)

Description: When the compressor discharge temperature (TP) is more than 115oC for 10 seconds, the compressor ceases operation and does not restart until TP is less than 90°C

Recommended parts to prepare: Connection wires, Outdoor PCB, Discharge temperature sensor, Refrigerant

Troubleshooting and repair:

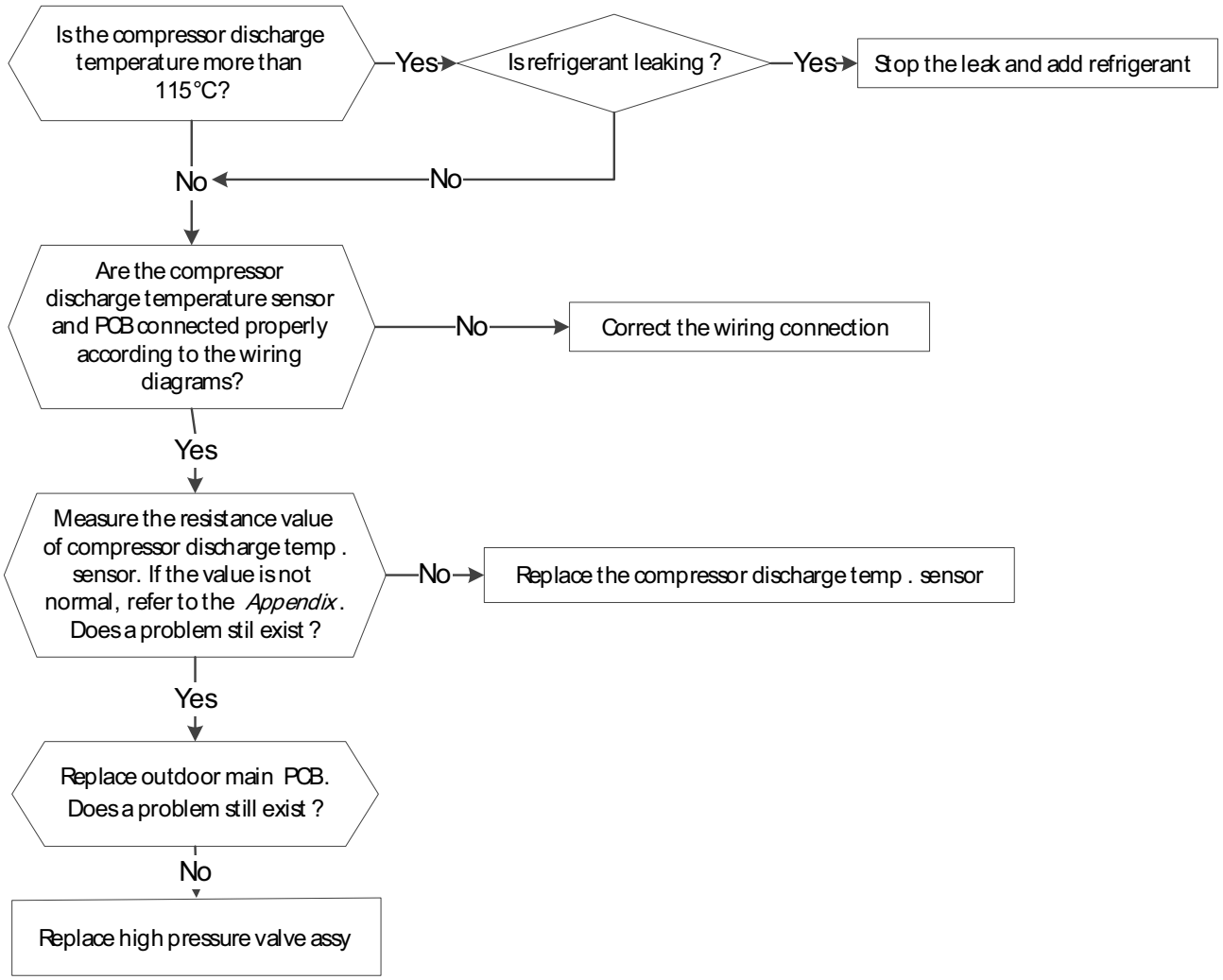

PC 08 (Current overload protection)/ PC 42 (Compressor start failure of outdoor unit)/ PC 44 (ODU zero speed protection) / PC 46 (Compressor speed has been out of control)/ PC 49 (Compressor overcurrent failure)

Description: An abnormal current rise is detected by checking the specified current detection circuit.

Recommended parts to prepare: Outdoor PCB, Connection wires, Bridge rectifier, PFC circuit or reactor, Refrigeration piping system, Pressure switch, Outdoor fan, PM module board

Troubleshooting and repair:

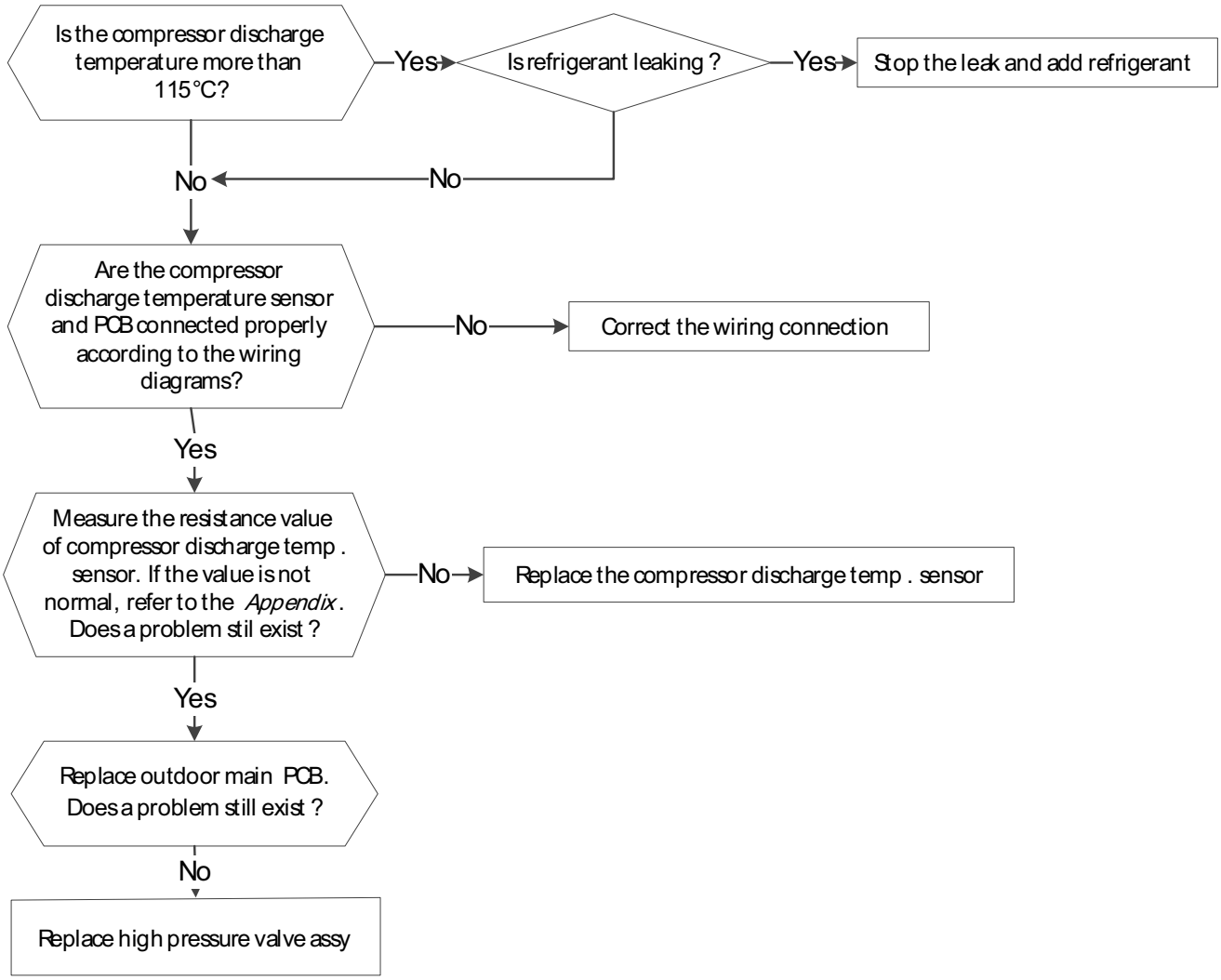

PC 0A (High temperature protection of condenser diagnosis and solution)

Description: The unit will stop when condenser temperature is higher than 65°C, and runs again when it is less than 52°C

Recommended parts to prepare: Connection wires, Condenser temperature sensor, Outdoor fan, Outdoor main PCB, Refrigerant

Troubleshooting and repair:

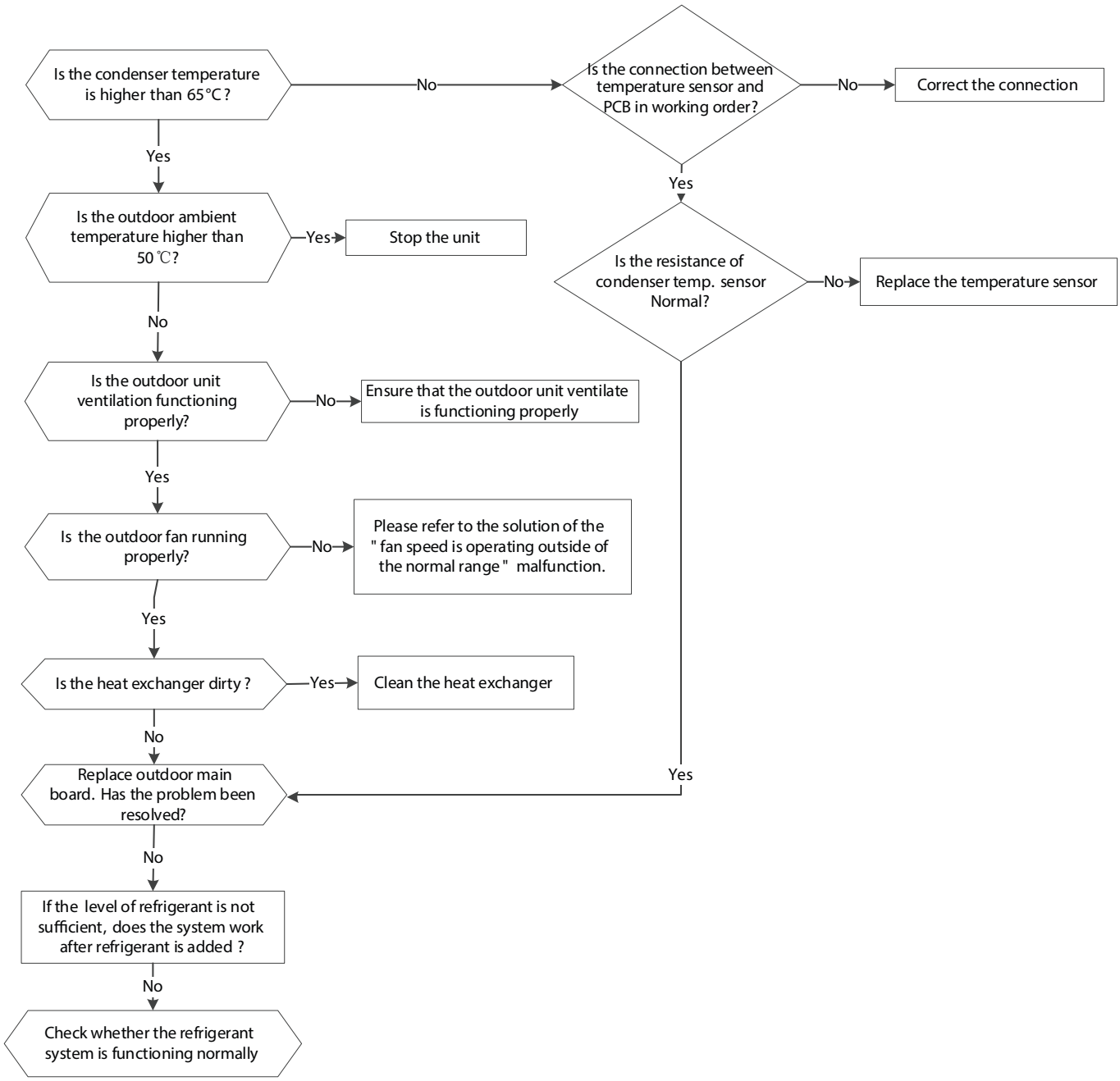

PC 0F (PFC module protection diagnosis and solution)

Description: Outdoor PCB detects PFC signal is low voltage or DC voltage is lower than 340V for 6s when quick check.

Recommended parts to prepare: Connection wires Outdoor PCB, Inductance, PFC circuit or IPM module board

Troubleshooting and repair:

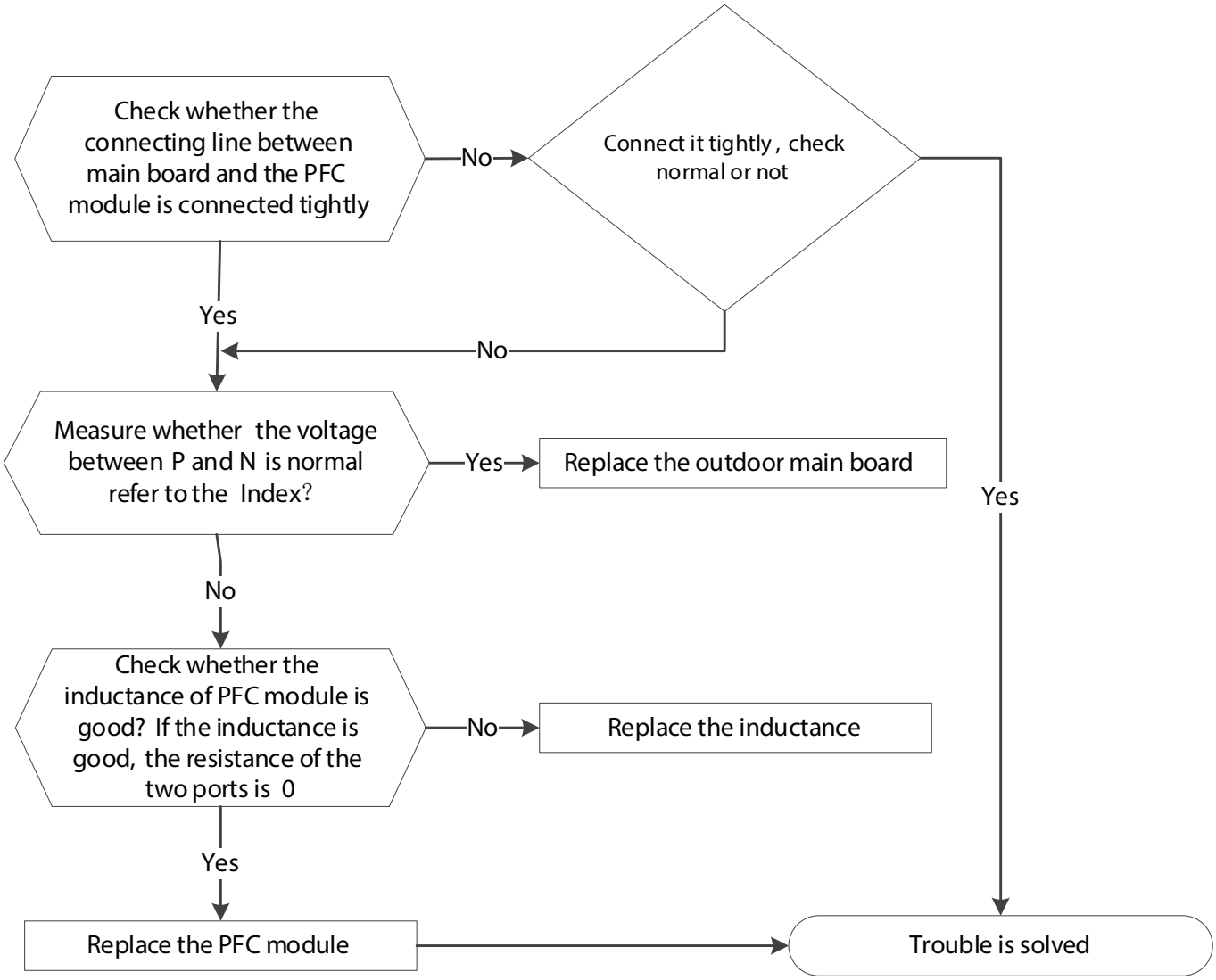

PC 10 (ODU low AC voltage protection)/ PC 11 (ODU main control board DC bus high voltage protection)/ PC 12 (ODU main control board DC bus high voltage protection /341 MCE error) Diagnosis and Solution

Description: Abnormal increases or decreases in voltage are detected by checking the specified voltage detection circuit.

Recommended parts to prepare: Power supply wires, IPM module board, Outdoor PCB, Bridge rectifier, PFC circuit or reactor

Troubleshooting and repair:

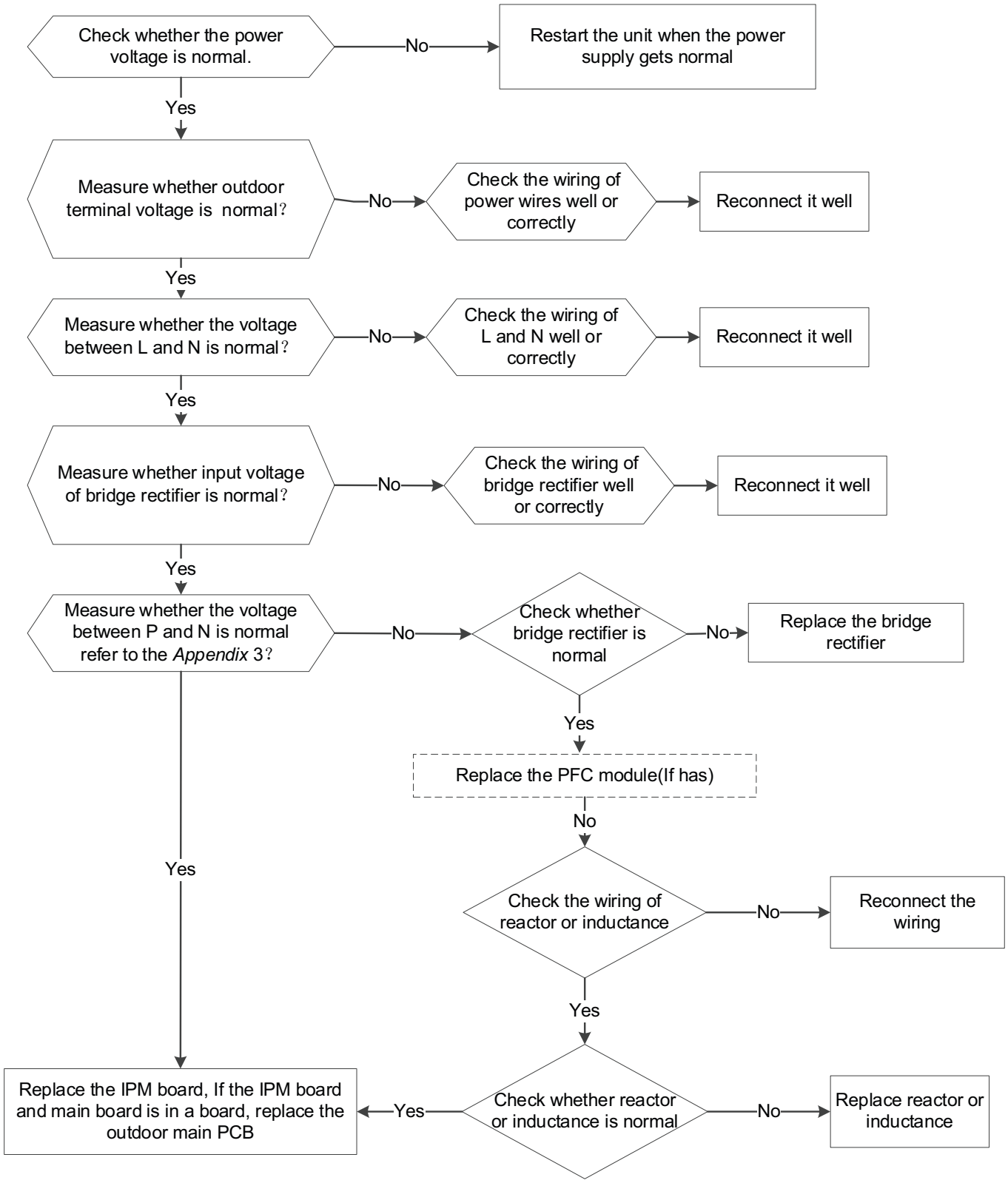

PC 0L (Low Ambient Temperature Protection)

Description: It is a protection function. When compressor is off, outdoor ambient temperature(T4) is lower than -35oC. for 10s, the AC will stop and display the failure code.

When compressor is on, outdoor ambient temperature(T4) is lower than -40oC.for 10s, the AC will stop and display the failure code.

When outdoor ambient temperature(T4) is no lower than -32oC.for 10s, the unit will exit protection

EH b3 (Communication Malfunction Between Wire and Master Control) Diagnosis and Solution

Description: If Indoor PCB does not receive feedback from wired controller, the error displays on the wired controller

Recommended parts to prepare: Connection wires, Indoor PCB, Wired controller

Troubleshooting and repair:

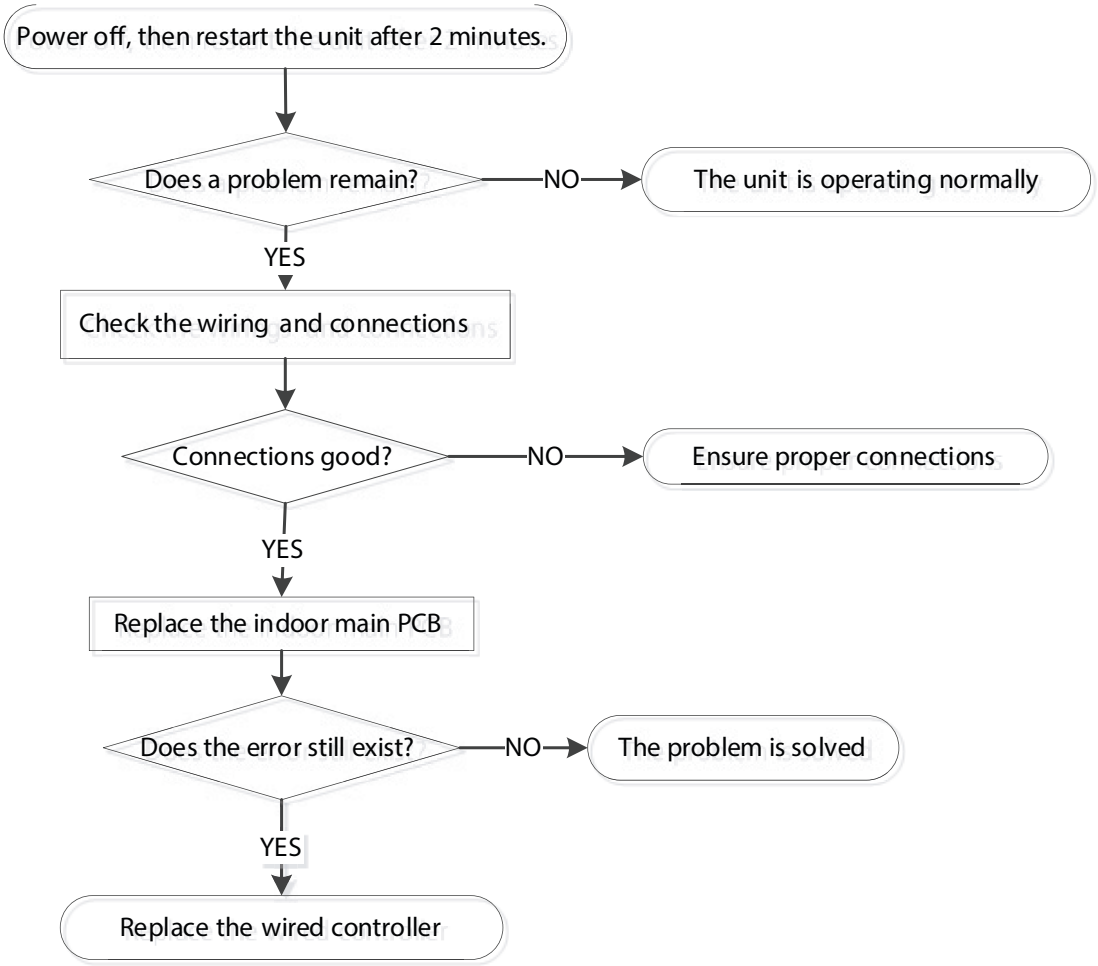

EH bA (Communication Malfunction Between Indoor Unit and External Fan Module)/ EH 3A(External Fan DC Bus Voltage Is Too Low Protection)/ EH 3b (External Fan DC Bus Voltage is Too High) Fault) Diagnosis and Solution

Description: Indoor unit does not receive the feedback from external fan module during 150 seconds. or Indoor unit receives abnormal increases or decreases in voltage from external fan module.

Recommended parts to prepare: Indoor main PCB

Troubleshooting and repair:

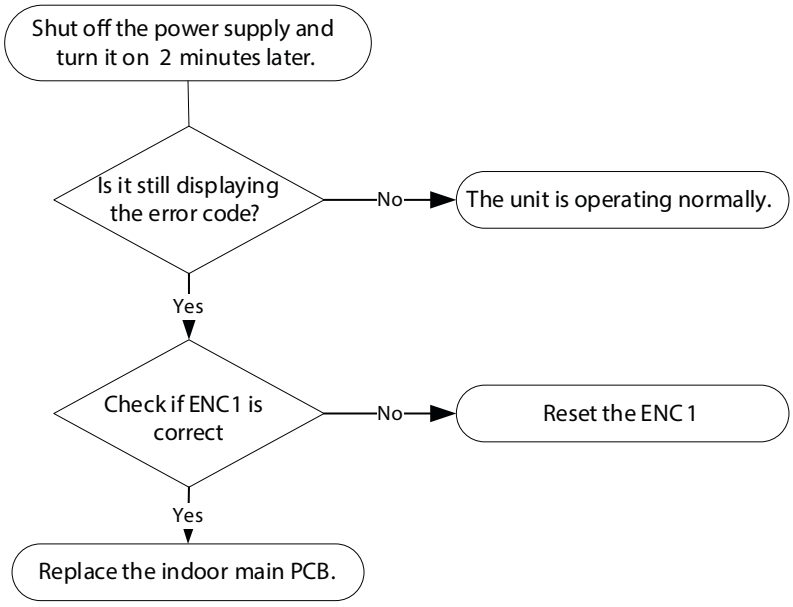

EC 0d (ODU Malfunction Diagnosis and Solution)

Description: The indoor unit detects the outdoor unit in error.

Recommended parts to prepare: Outdoor unit

Troubleshooting and repair:

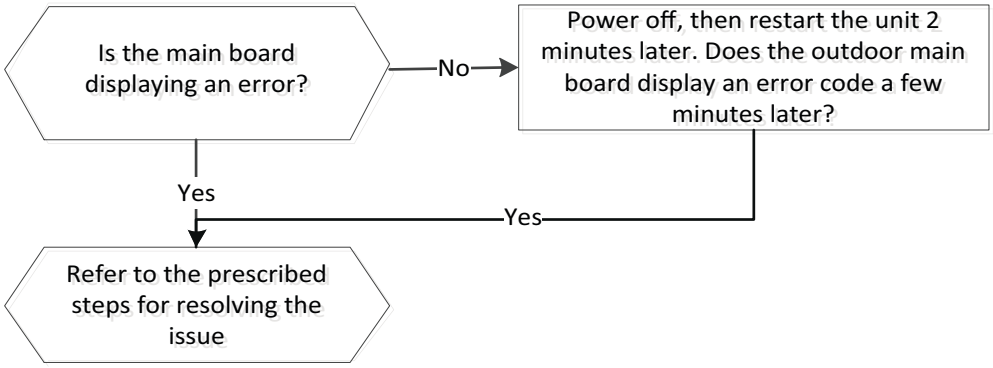

EH 06 (IDU Main Control Board and Display Board Communication Error Diagnosis and Solution)

Description: Indoor PCB does not receive feedback from the display board.

Recommended parts to prepare: Communication wire, Indoor PCB, Display board

Troubleshooting and repair:

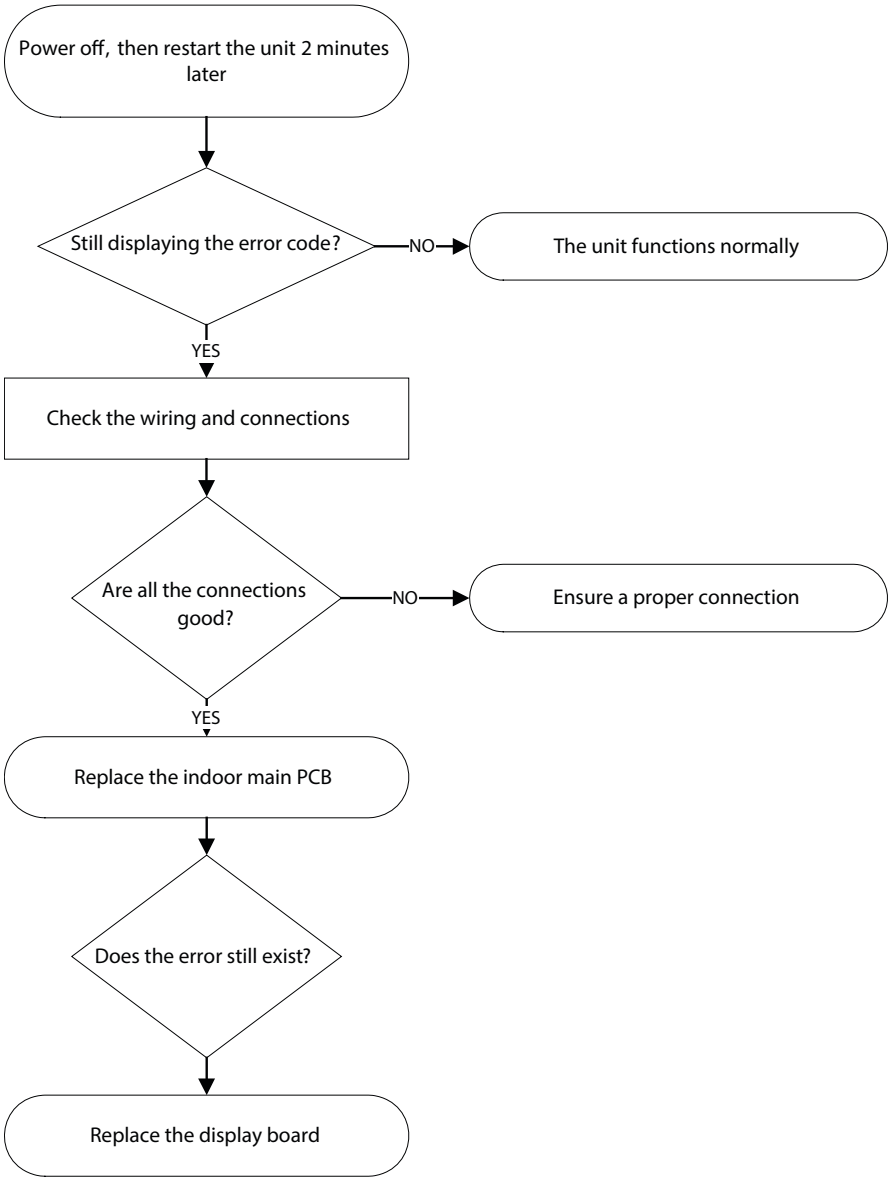

EL 16 (Communication Malfunction Between Adapter Board and Outdoor Main Board Diagnosis and Solution)

Description: The adapter PCB cannot detect the main control board.

Recommended parts to prepare: Connection wires, Adapter board, Outdoor main PCB

Troubleshooting and repair:

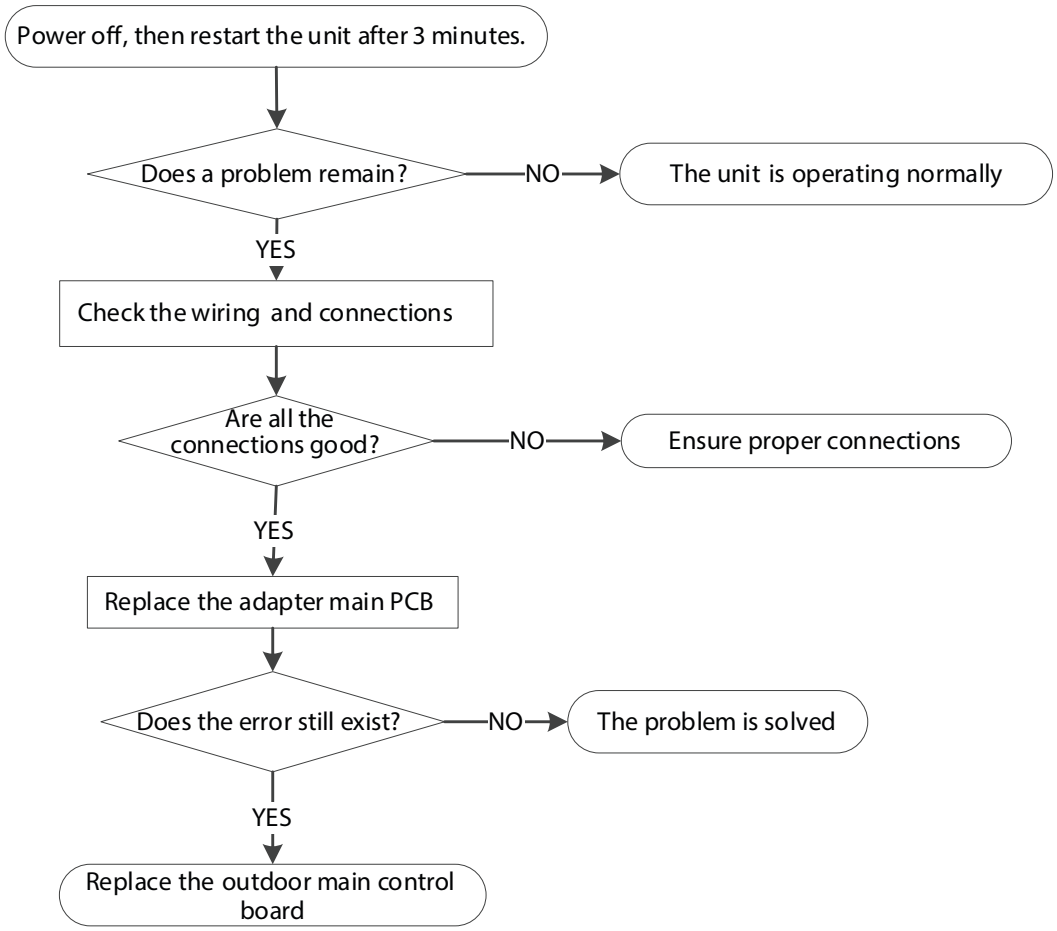

FL 09 (Mismatch between the new and old platforms diagnosis and solution)

Description: Indoor and outdoor units are mismatched, the LED displays this code. Please replace the matching indoor or outdoor unit.

PH 90 (High temperature protection of evaporator diagnosis and solution)

Description: When evaporator coil temperature is more than 60°C in heating mode, the unit stops. It starts again only when the evaporator coil temperature is less than 52°C.

Recommended parts to prepare: Connection wires, Evaporator coil temperature sensor (T2), Indoor fan, Indoor main PCB

Troubleshooting and repair:

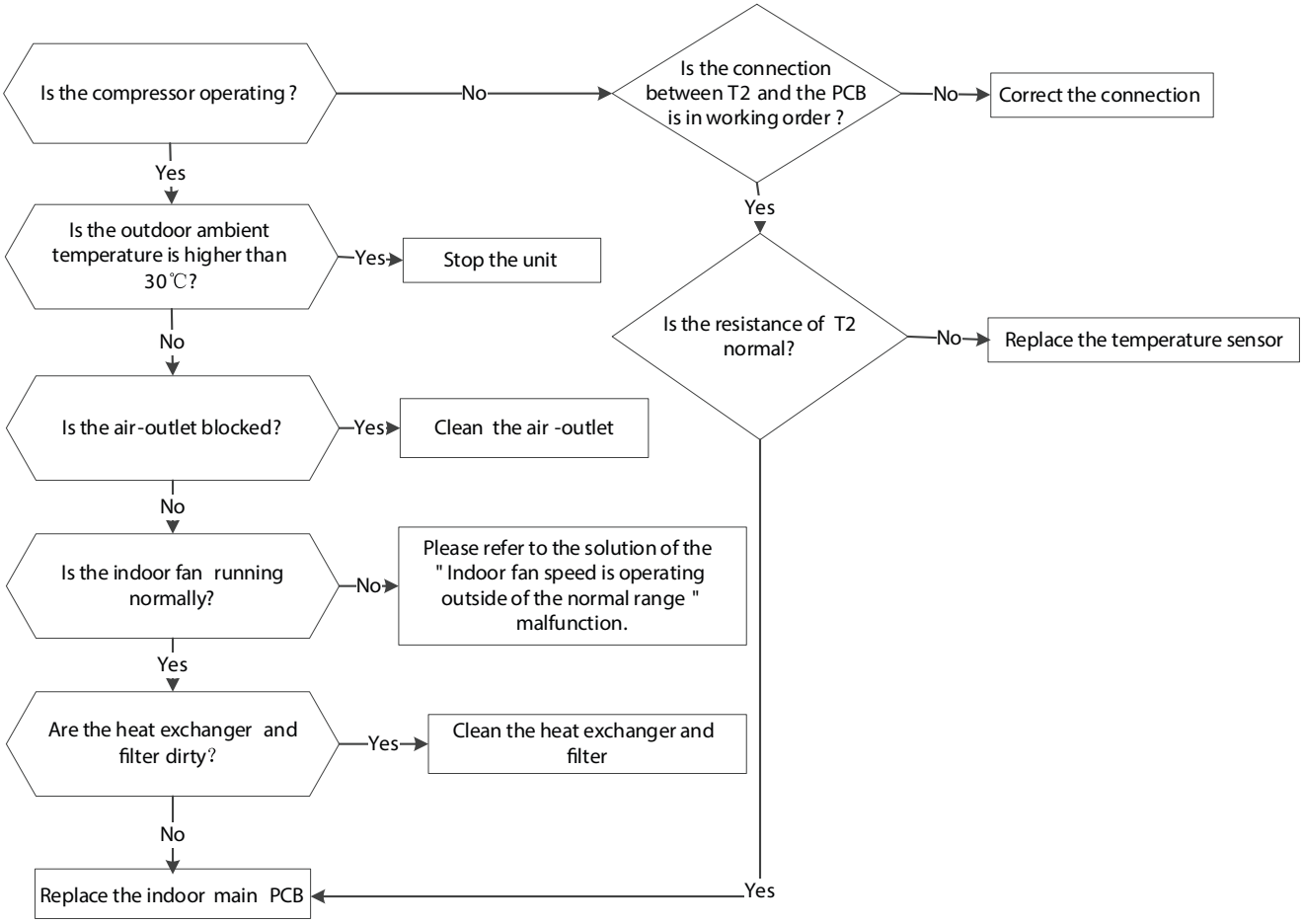

PH 91 (Low temperature protection of evaporator diagnosis and solution)

Description: When evaporator coil temperature is lower than 0°C in cooling mode or drying mode, the unit stops. It starts again only when the evaporator coil temperature is more than 5°C.

Recommended parts to prepare: Connection wires, Evaporator coil temperature sensor (T2), Indoor main PCB

Troubleshooting and repair:

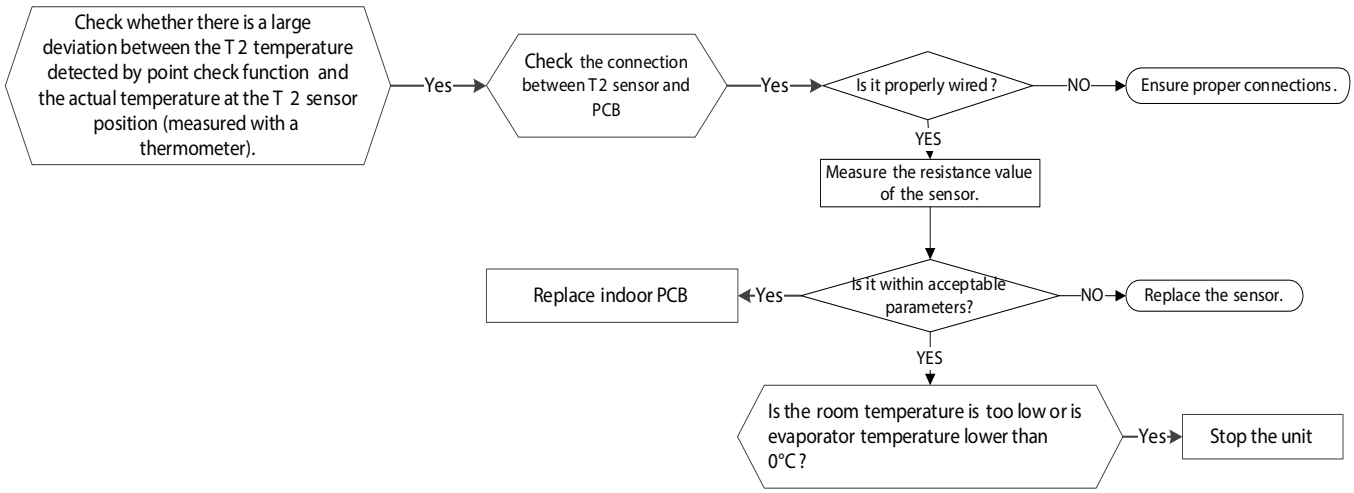

CHECK PROCEDURES

Temperature Sensor Check

⚠ WARNING

ELECTRICAL SHOCK HAZARD

Be sure to turn off all power supplies or disconnect all wires to avoid electric shock. Operate after compressor and coil have returned to normal temperature in case of injury.

1. Disconnect the temperature sensor from the PCB.
2. Measure the sensor's resistance value with a multi-meter.
3. Check the corresponding temperature sensor resistance value table (see "Temperature Sensor Resistance Value Table for TP (°C - K)" on page 84 and "Other Temperature Sensors Resistance Value Table (°C - K)" on page 85).

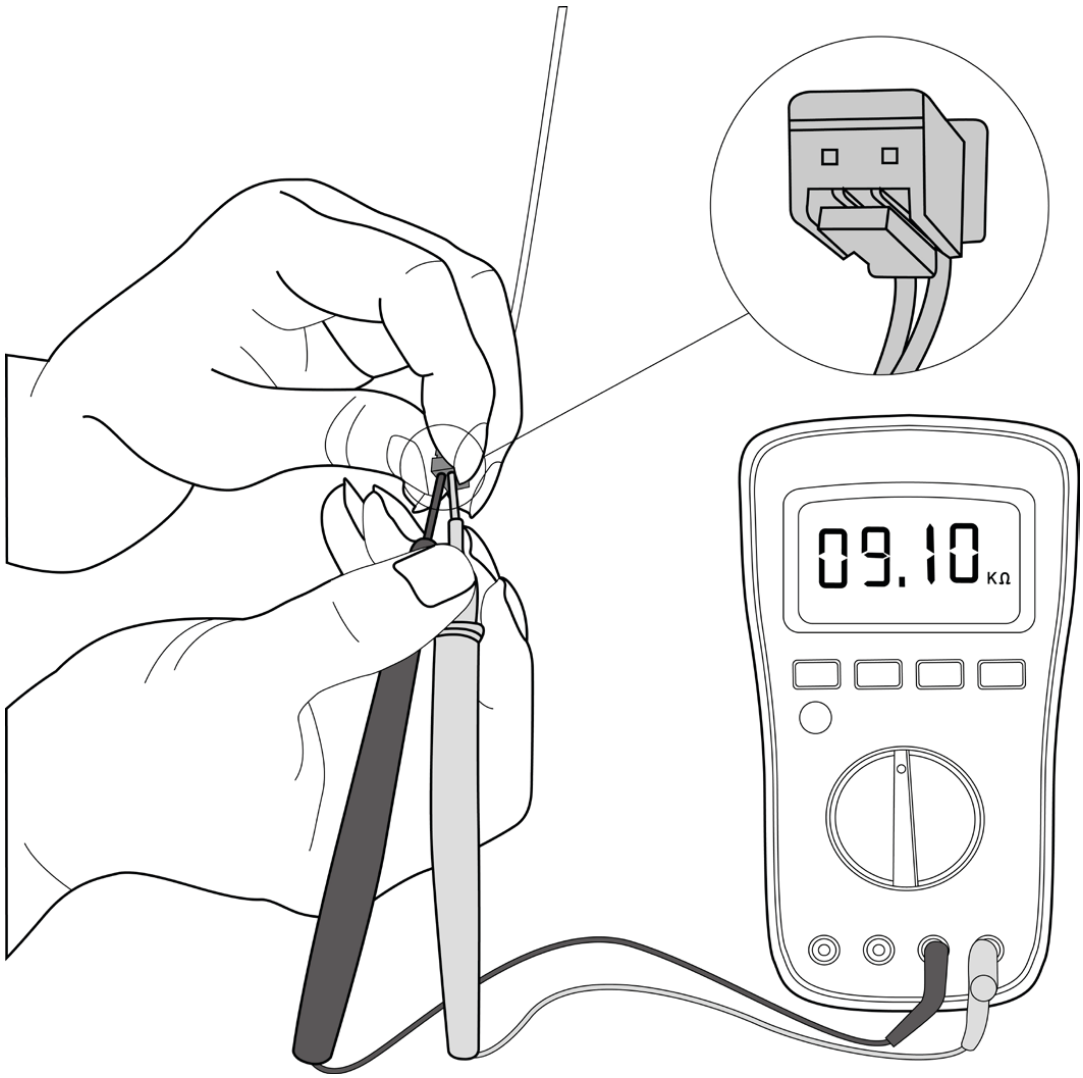

Fig. 36 —Measure the Sensor's Resistance Value

Compressor Check

1. Disconnect the compressor power cord from the outdoor PCB.
2. Measure the resistance value of each winding using a multi-meter.
3. Check the resistance value of each winding in tables 9 through 12:

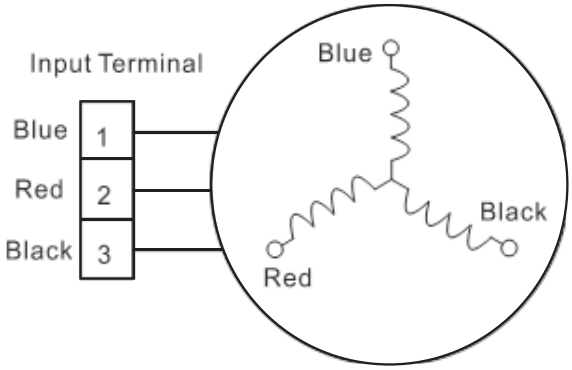

Fig. 37 —Compressor Check

Table 5 – Resistance Values

Resistance Value	KSN140D58UFZ	KTF250D22UMT	KTM240D46UKT2	KTF310D43UMT	MTH550UKPC8FU
Blue-Red	1.86Ω	0.75Ω	1.04Ω	0.65Ω	0.295Ω
Blue-Black					
Red-Black					

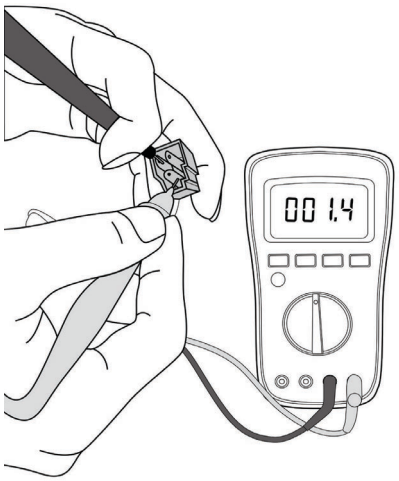

Fig. 38 —Resistance Check

NOTE: The picture and the value are only for reference, actual condition and specific value may vary.

IPM Continuity Check

WARNING

ELECTRICAL SHOCK HAZARD

Electricity remains in capacitors even when the power supply is off. Ensure the capacitors are fully discharged before troubleshooting.

1. Turn off outdoor unit and disconnect power supply.
2. Discharge electrolytic capacitors and ensure all energy-storage unit has been discharged.
3. Disassemble outdoor PCB or disassemble IPM board.
4. Measure the resistance value between P and U(V, W, N); U(V, W) and N.

Table 6 – Resistance Value

Digital Tester		Resistance Value	Digital Tester		Resistance Value
(+) Red	(-) Black		(+) Red	(-) Black	
P	N	∞ (Several MƒÇ)	U	N	∞ (Several MƒÇ)
	U		V		
	V		W		
	W		-		

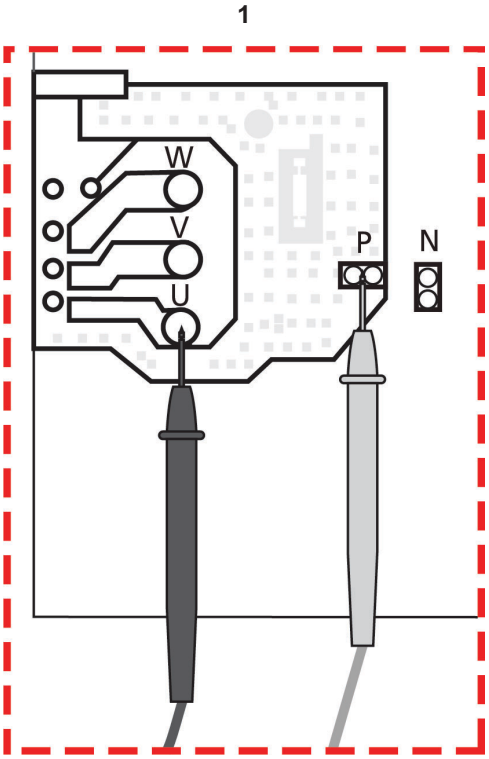

Fig. 39 —Resistance Value

Table 7 – Voltage Range

208-240V (1-phase)		
In Standby		
Around 310VDC		
In Operation		
With passive PFC module	With partial active PFC module	With fully active PFC module
>200VDC	>310VDC	>370VDC

4-Way Valve Check

1. Power on, use a digital tester to measure the voltage, when the unit operates in cooling, it is 0V. When the unit operates in heating, it is about equal to power supply voltage.
   If the value of the voltage is not in the range, the PCB must have problems and need to be replaced.

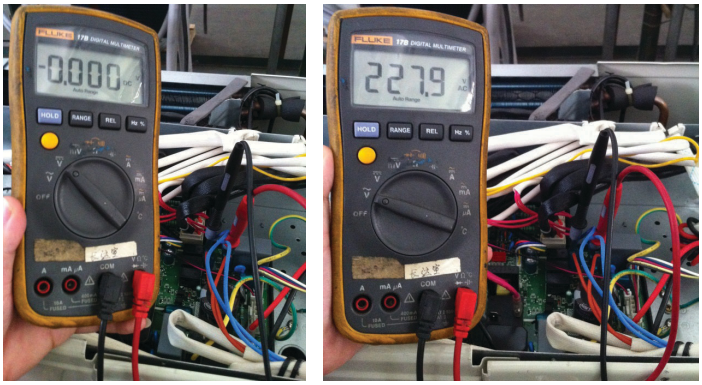

Fig. 40 —Measure the Voltage

2. Turn off the power, use a digital tester to measure the resistance. The value should be 1.8~2.5 KΩ.

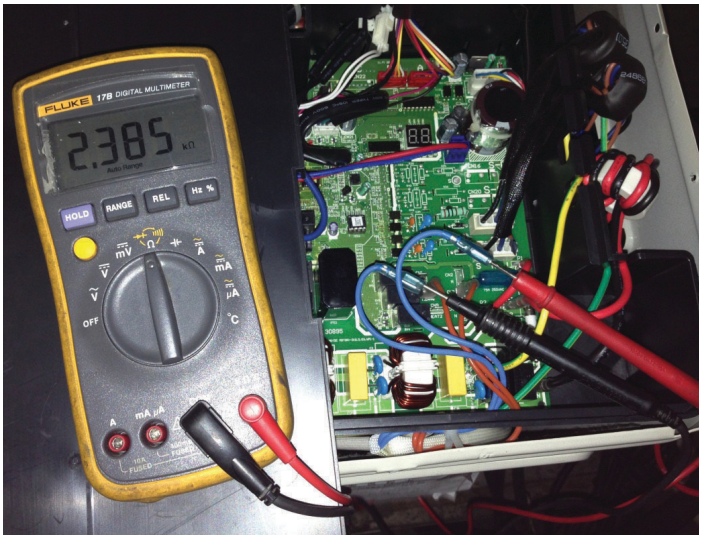

Fig. 41 —Use a Digital Tester to Measure Resistance

EXV Check

⚠ WARNING

ELECTRICAL SHOCK HAZARD
Electricity remains in the capacitors even when the power is off.
Ensure the capacitors are fully discharged before troubleshooting.

1. Turn off outdoor unit and disconnect power supply.
2. Disconnect the connectors of EXV.
3. Measure the resistance value between Red and Blue (Yellow); Brown and Orange (White).

Main Parts Check

1. Temperature sensor checking
   Disconnect the temperature sensor from PCB, measure the resistance value with a tester.

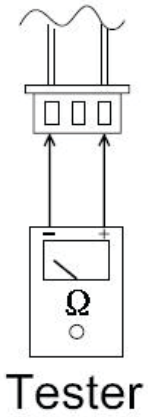

Fig. 42 —Sensor Test

2. Temperature sensors
   a. Room temp. (T1) sensor,
   b. Indoor coil temp. (T2) sensor,
   c. Outdoor coil temp. (T3) sensor,
   d. Outdoor ambient temp. (T4) sensor,
   e. Compressor discharge temp. (T5) sensor.
   f. Measure the resistance value of each winding by using the multi-meter.

DISASSEMBLY INSTRUCTIONS

Unit Disassembly - Panel Plate 9K -12K (115V and 208/230V)

PROCEDURES	ILLUSTRATION
1. Turn off the air conditioner and the power breaker 2. Remove the handle screw (1) then remove the handle. (see illustration)	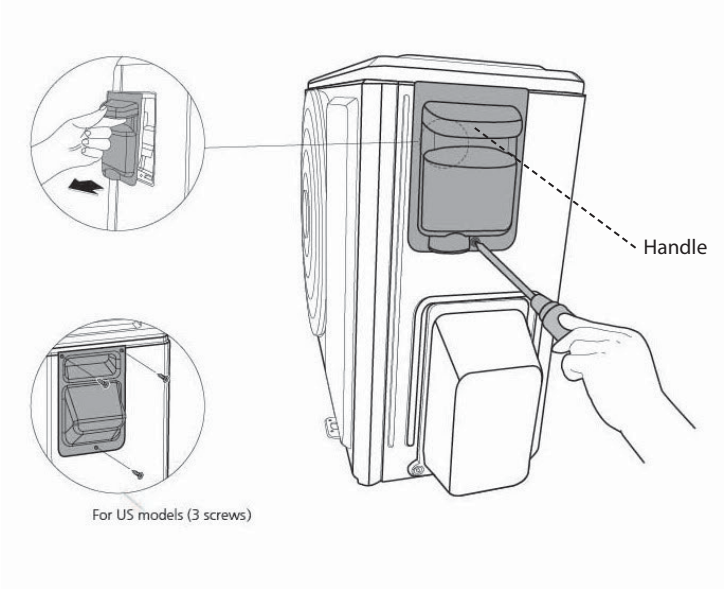
3. Remove the top cover screws (3) then remove the top cover. One of the screws is located underneath the big handle. (see illustration)	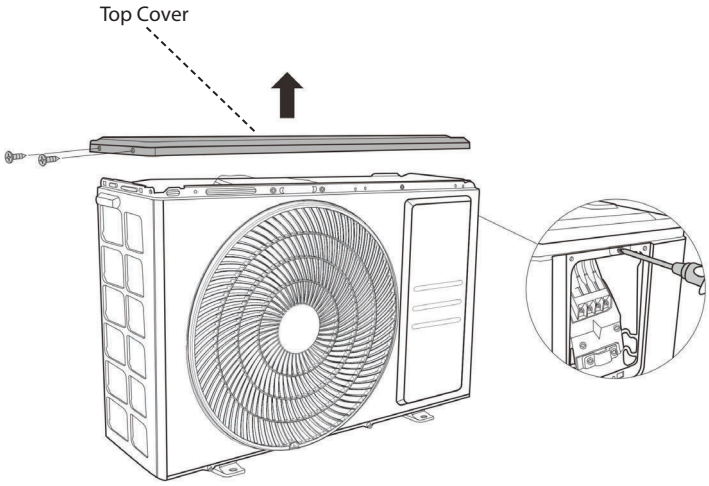

PROCEDURES	ILLUSTRATION
4. Remove the screws of water collecting cover and then remove the water collecting cover (2 screws).(see illustration)	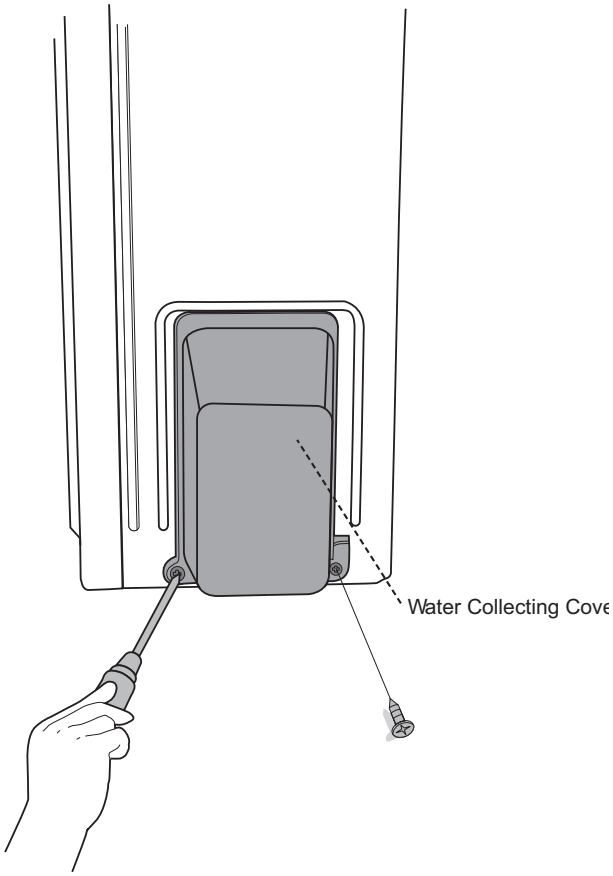
5. Remove the front panel screws then remove the front panel (6 screws (on/off models) or 8 screws (inverter models)). (see illustration)	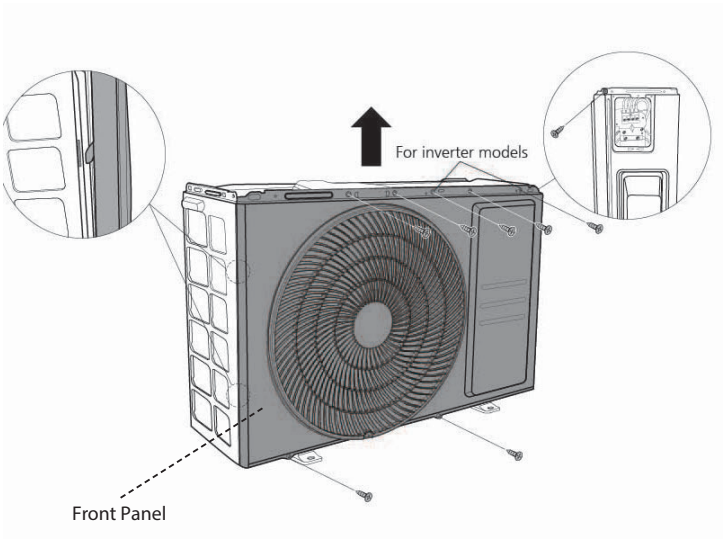

PROCEDURES	ILLUSTRATION
6. Remove the screws of the right panel and then remove the right panel (5 screws) (see illustration)	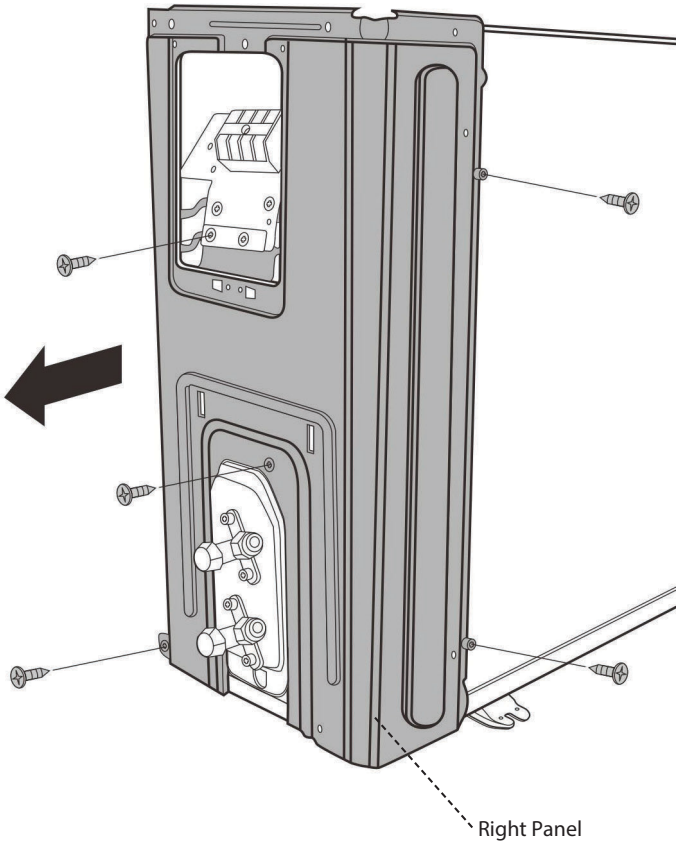

Unit Disassembly - Panel Plate 18K - 24K (208/230V)

PROCEDURES	ILLUSTRATION
1. Turn off the air conditioner and the power breaker 2. Remove the screw of the big handle and then remove the big handle (3 screws) (see illustration)	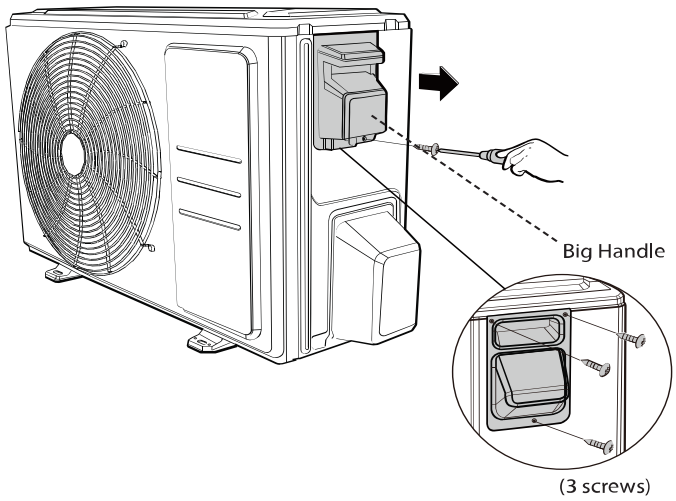
3. Remove the screws of the top cover and then remove the top cover (4 screws). One of the screws is located underneath the big handle. (see illustration)	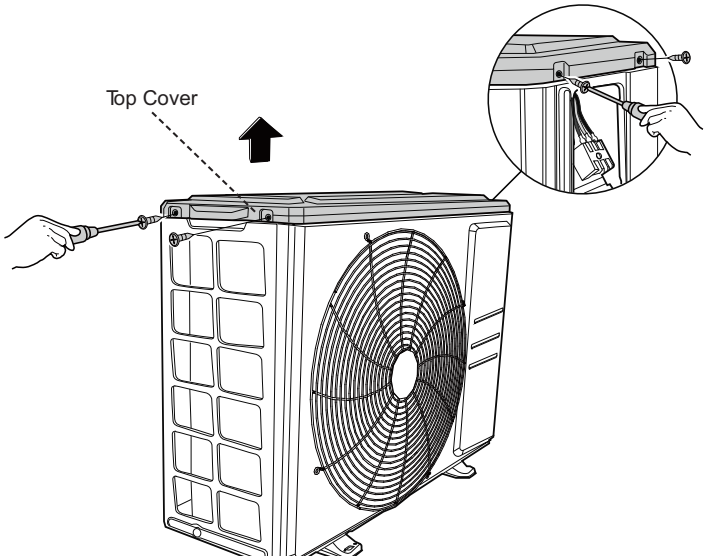

PROCEDURES	ILLUSTRATION
4. Remove the screws of water collecting cover and then remove the water collecting cover (2 screws).(see illustration)	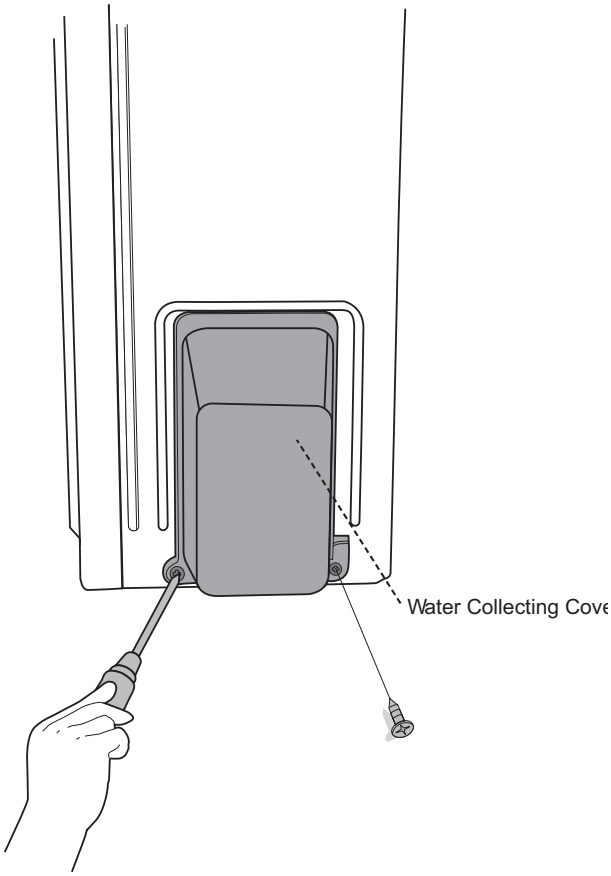
5. Remove the screws of the front panel and then remove the front panel (7 screws (on/off models) or 9 screws. (inverter models). (see illustration)	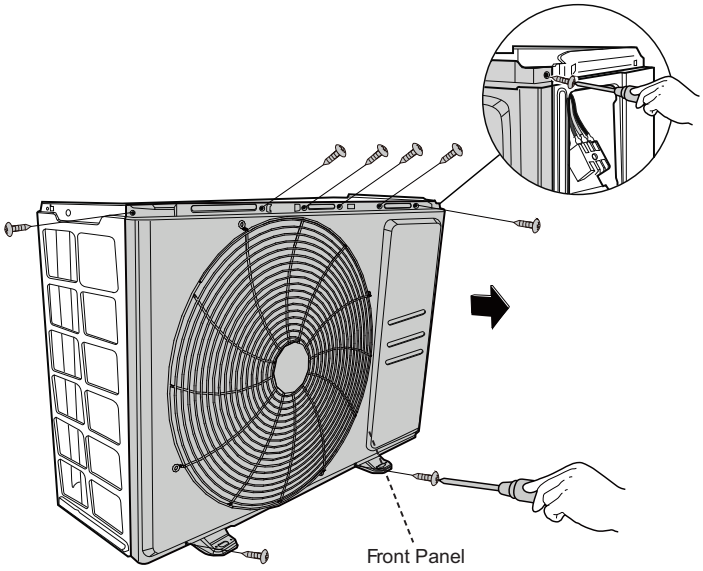

PROCEDURES	ILLUSTRATION
6. Remove the screws of the right panel and then remove the right panel (5 screws) (see illustration)	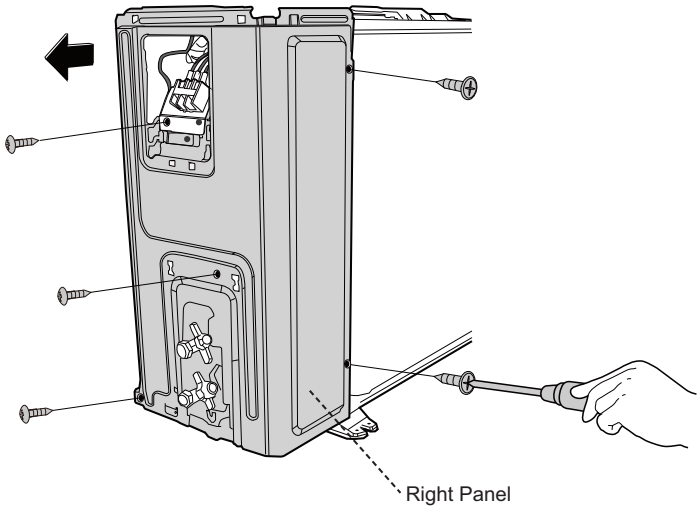

Disassembly - Electrical Parts 9K - 12K (115V)

PROCEDURES	ILLUSTRATION
1. Disconnect the connector for compressor and release the ground wire(1 screw). (see illustration)	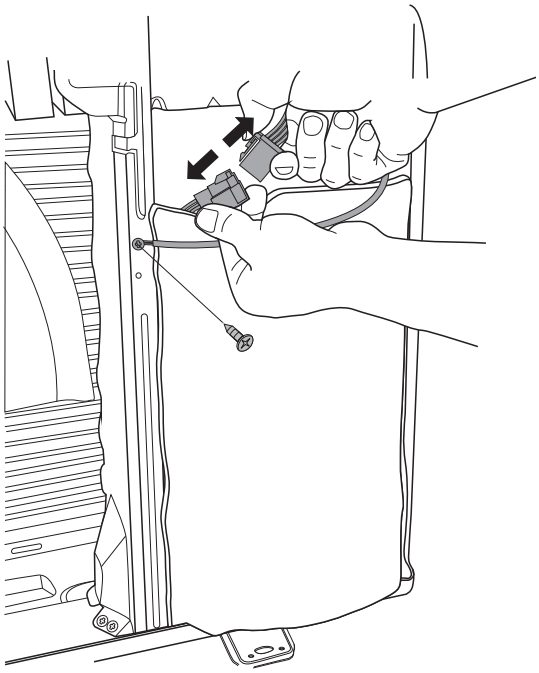
2. Pull out the wires from electrical supporting plate and turn over the electronic control assembly (see illustration) **NOTE:** Electric control box cover cannot be removed, so the voltage between P and N cannot be measured.	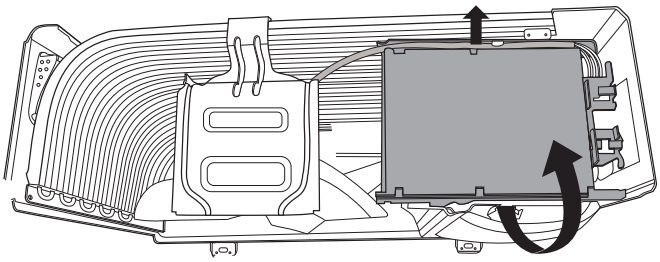
3. Remove the electronic installing box subassembly (3 hooks)	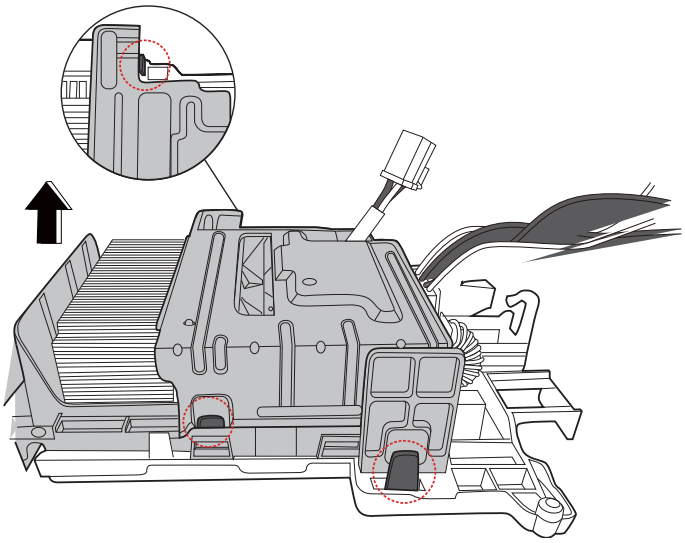

PROCEDURES	ILLUSTRATION
4. Disconnect the connectors from the electronic control board	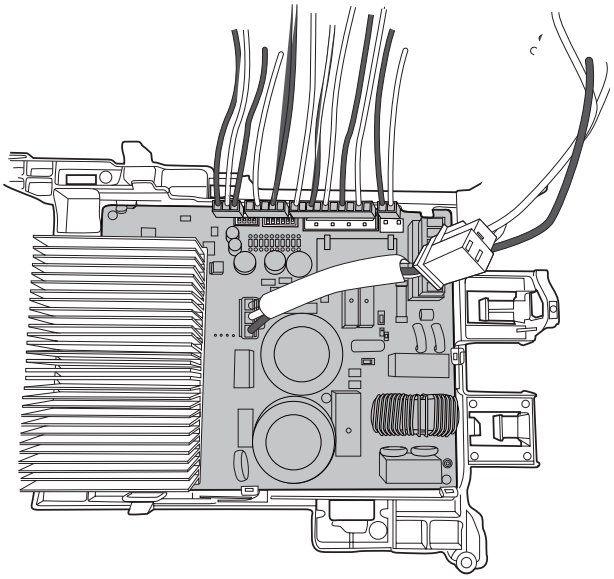
5. Then remove the electronic control board (4 hooks)	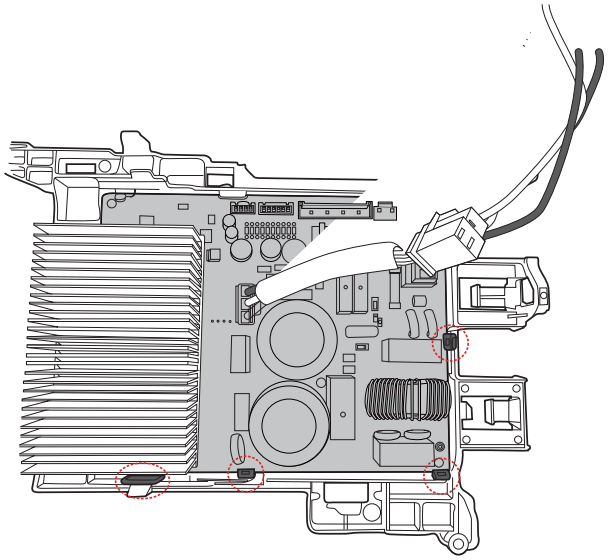

9K - 12K (208V/230V) Disassembly - Electrical Parts

PROCEDURES	ILLUSTRATION
1. Disconnect the connector for compressor and release the ground wire(1 screw). (see illustration)	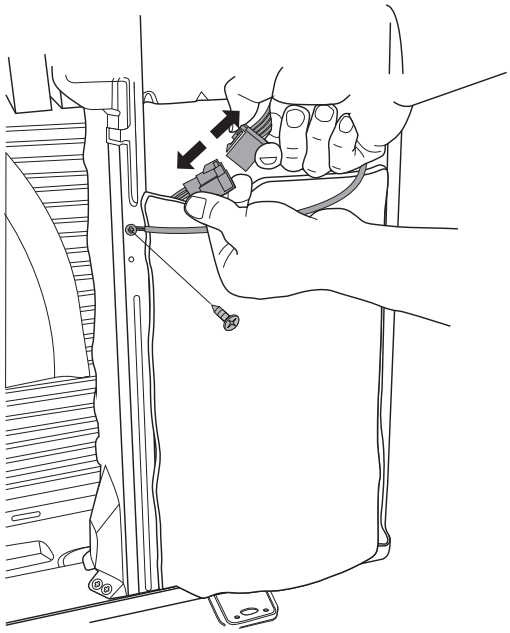
2. Pull out the wires from electrical supporting plate and turn over the electronic control assembly. (see illustration) **NOTE:** Electric control box cover cannot be removed, so the voltage between P and N cannot be measured.	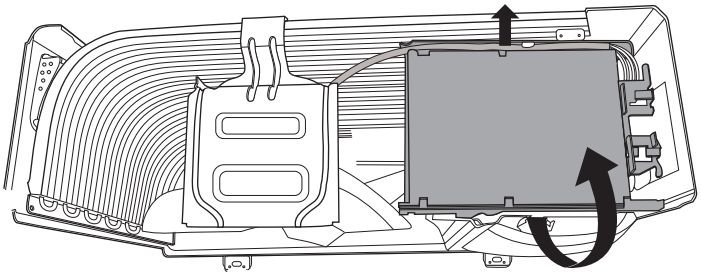
3. Remove the electronic installing box subassembly. (4 hooks)	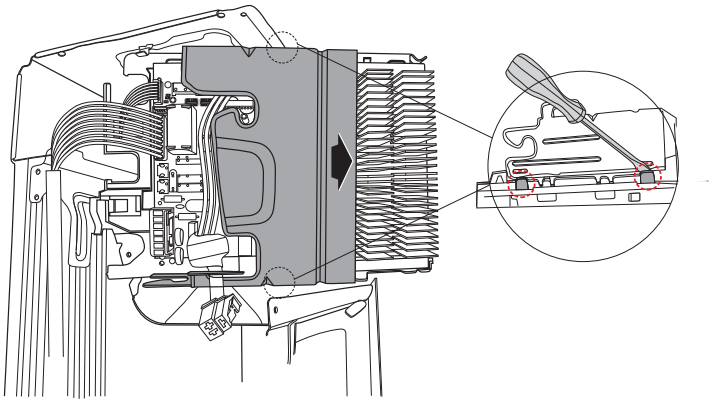

PROCEDURES	ILLUSTRATION
4. Remove the attaching board (2 hooks)	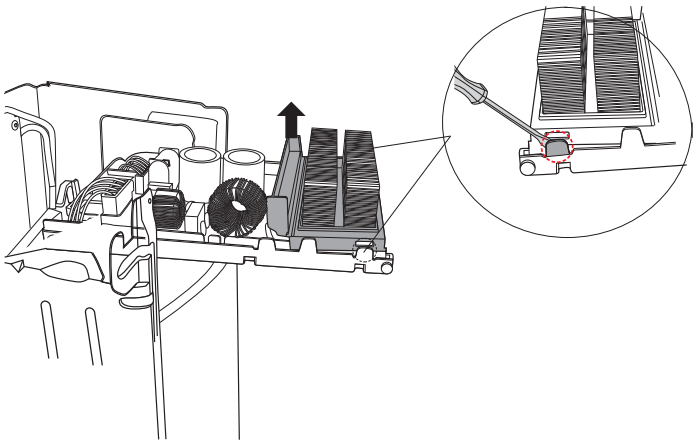
5. Disconnect the connectors from the electronic control board.	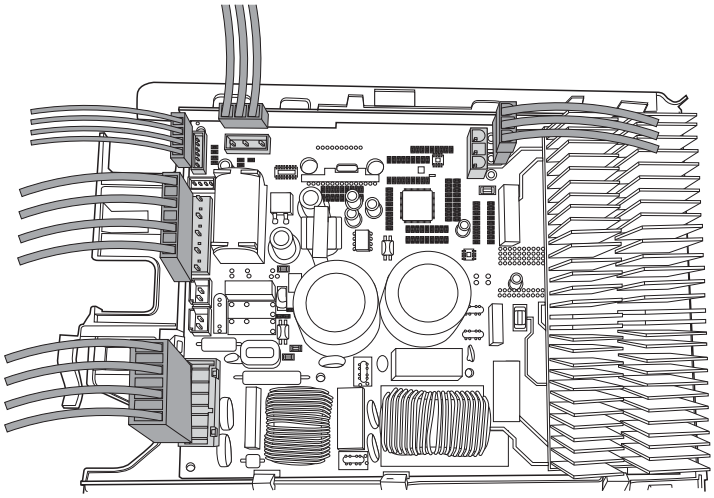
6. Then remove the electronic control board (4 hooks).(	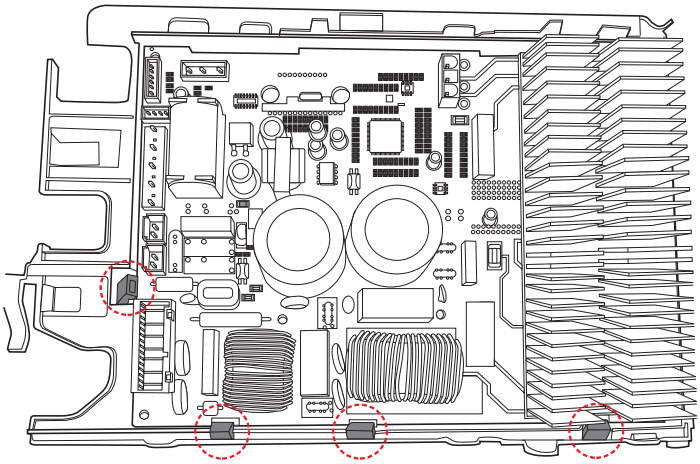

PROCEDURES	ILLUSTRATION
7. Remove the 1 screw and disconnect the wires and then remove the 24V board.	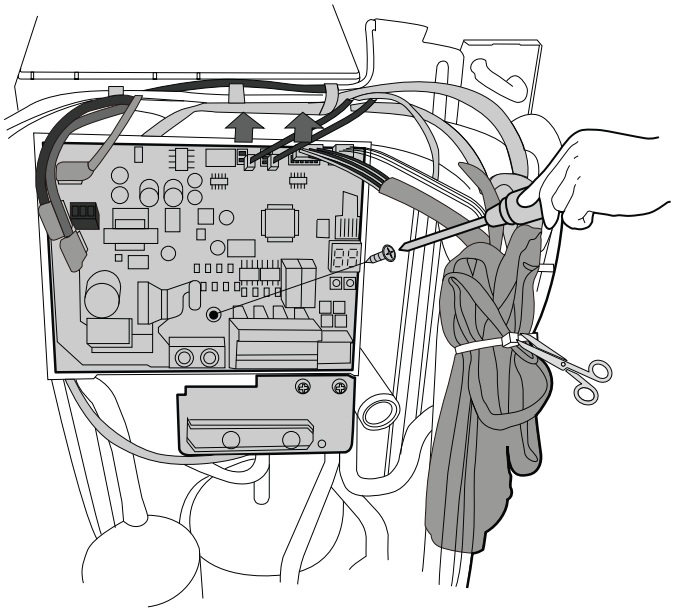

18K (208V/230V) Disassembly - Electrical Parts

WARNING: Anti-static gloves must be worn when you disassemble the electronic box.

PROCEDURES	ILLUSTRATION
1. Disconnect the connector for compressor and release the ground wire(1 screw). (see illustration)	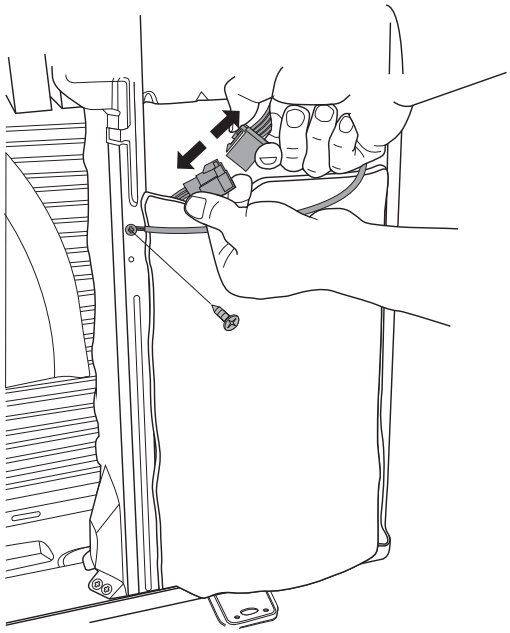
2. Pull out the wires from electrical supporting plate and turn over the electronic control assembly. (see illustration) **NOTE:** Electric control box cover cannot be removed, so the voltage between P and N cannot be measured.	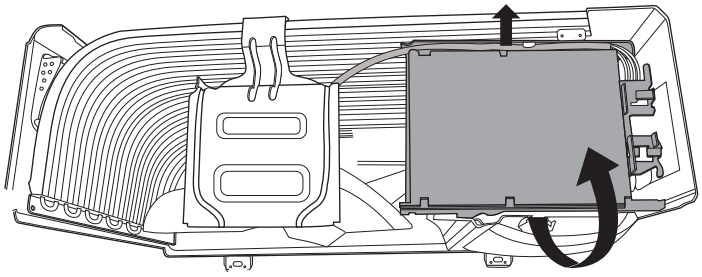
3. Remove the electronic installing box subassembly. (4 hooks)	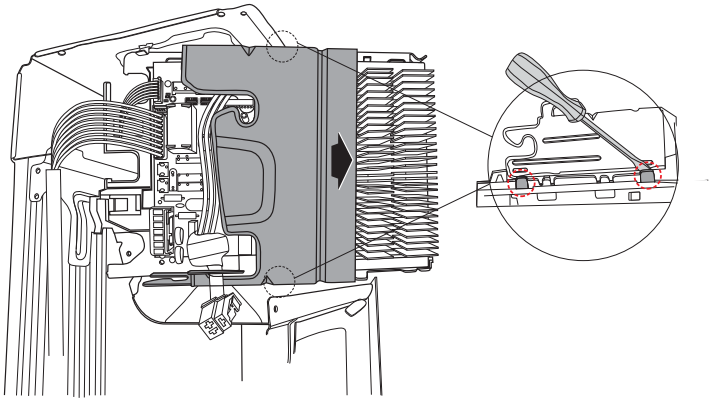

PROCEDURES	ILLUSTRATION
4. Remove the attaching board (2 hooks)	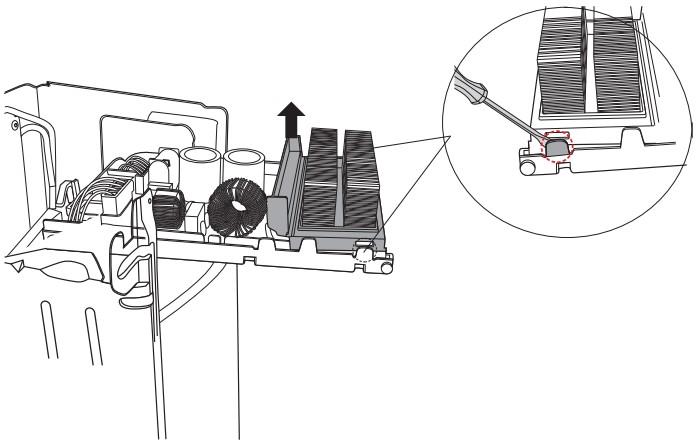
5. Disconnect the connectors from the electronic control board.	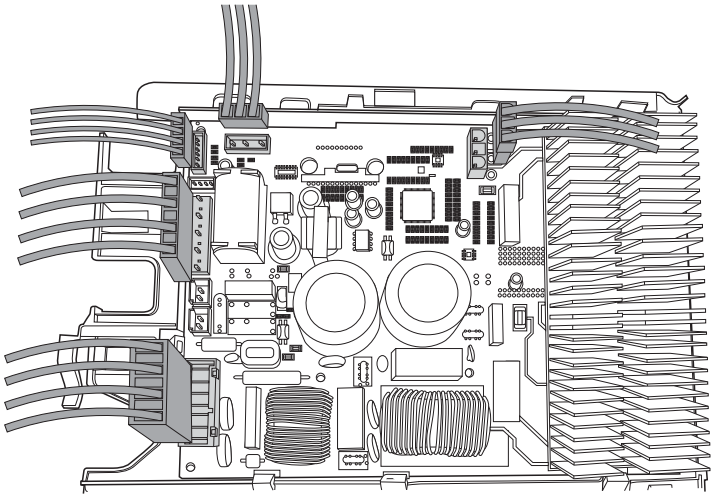
6. Then remove the electronic control board (4 hooks).(	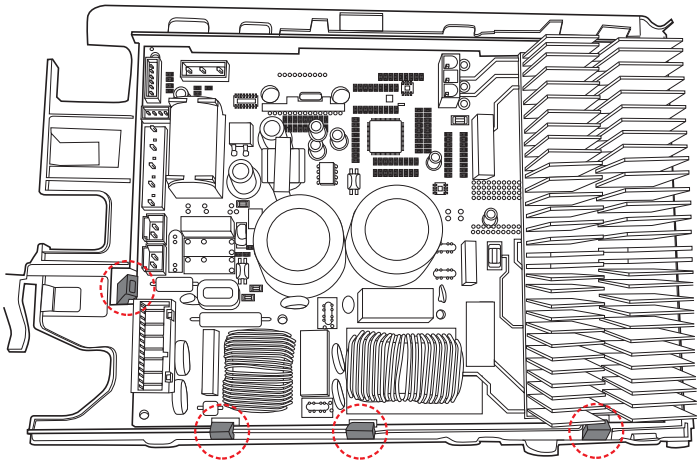

24K (208V/230V) Disassembly - Electrical Parts

PROCEDURES	ILLUSTRATION
1. Remove the 5 screws and unfix two hooks. (see illustration). **NOTE:** Electric control box cover cannot be removed, so the voltage between P and N cannot be measured. For some models, there might be a wiring diagram covering the screw.	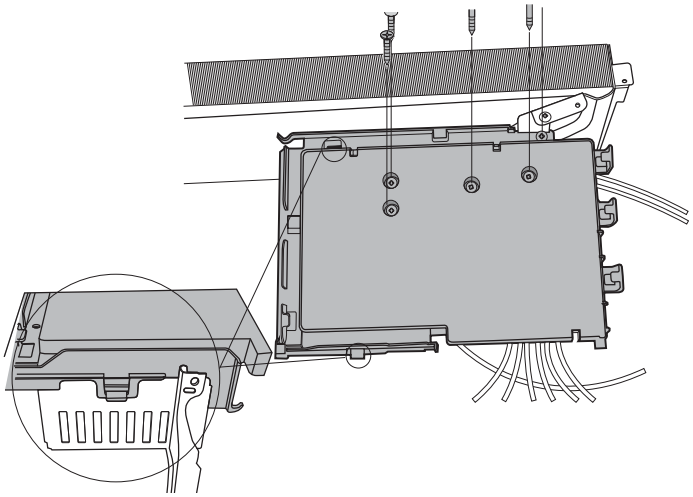
2. Disconnect the connector for fan motor from the electronic control board 3. Remove the connector for the compressor (see illustration). 4. Pull out the two blue wires connected with the four way valve (see illustration). 5. Pull out connectors of the condenser coil temp. sensor(T3),outdoor ambient temp. sensor(T4) and discharge temp. sensor (TP) (see illustration). 6. Disconnect the electronic expansion valve wire (see illustration). 7. Remove the connector for the DR and reactor (see illustration). 8. Then remove the electronic control board. **NOTE:** When replacing the electronic control board with a new one, pay attention to applying thermal paste on the heat sink. (see illustration)	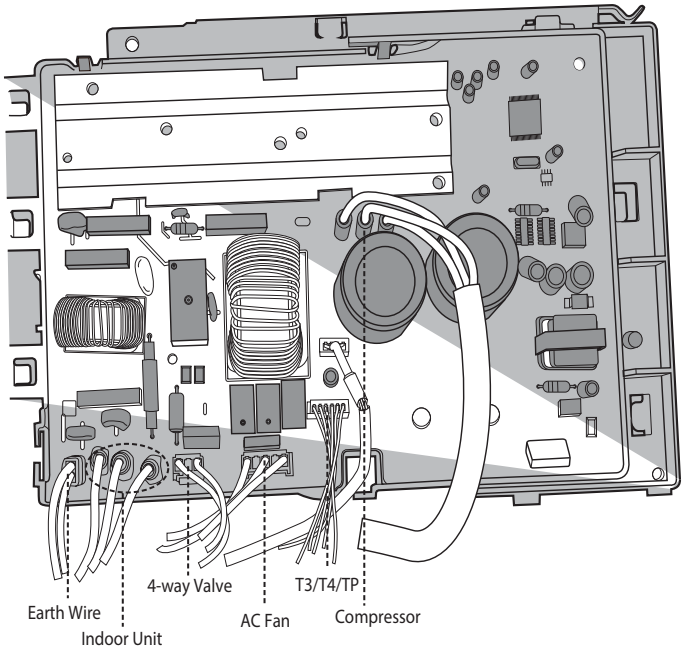

PROCEDURES	ILLUSTRATION
9. Remove the 1 screw and disconnect the wires and then remove the 24V board. (see illustration)	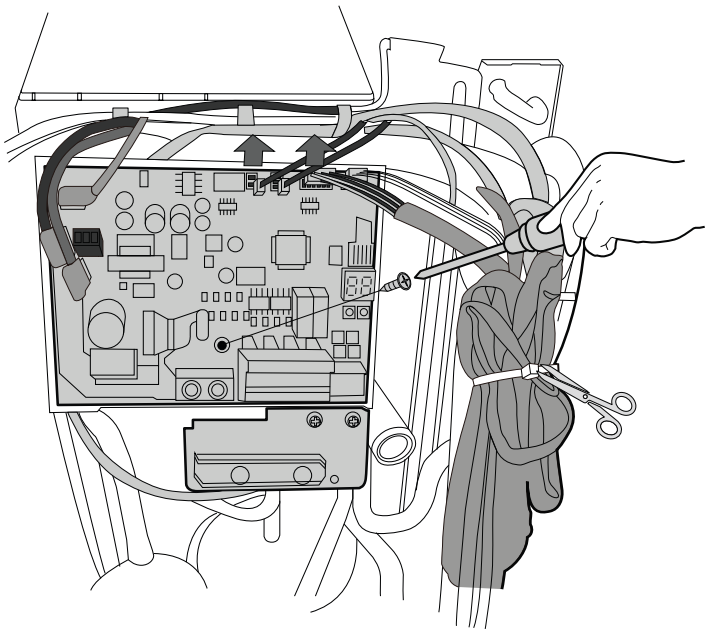

All Size Units, Disassembly - Fan Assembly

PROCEDURES	ILLUSTRATION
1. Remove the nut securing the fan with a spanner. 2. Remove the fan. (see illustration)	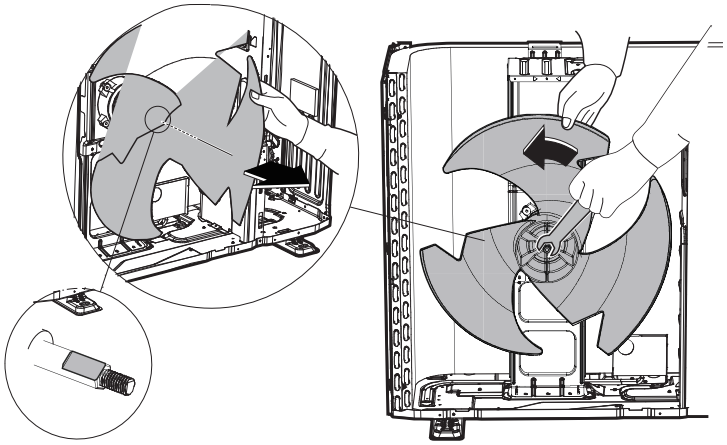

All Size Units, Disassembly - Fan Motor

PROCEDURES	ILLUSTRATION
1. Remove the fixing screws of the fan motor (4 screws) 2. Remove the fan motor. (see illustration)	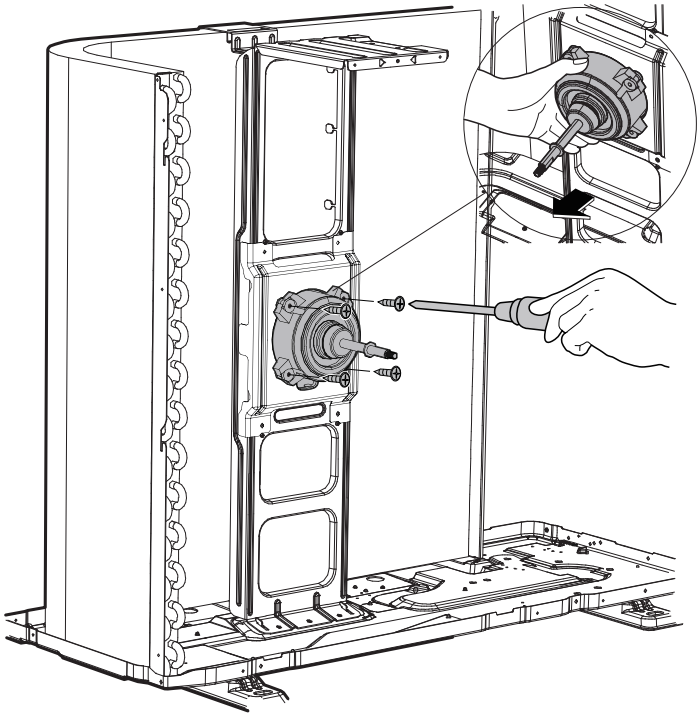

All Size Units, Disassembly - Sound Blanket

PROCEDURES	ILLUSTRATION
1. Remove the sound blanket (side and top)) (see illustration)	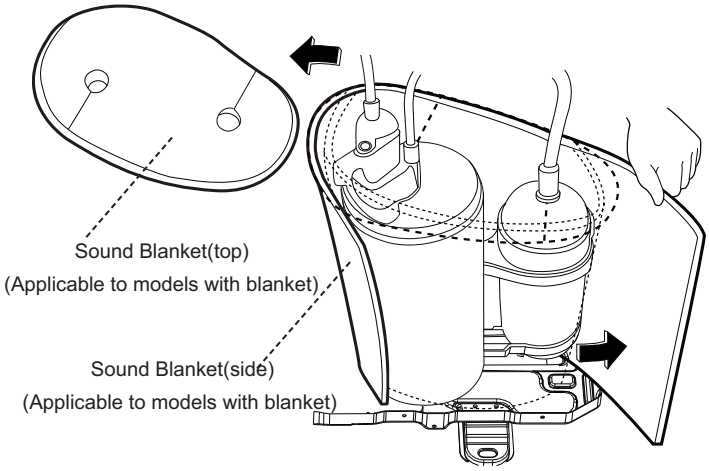

All Size Units, Disassembly - Four-Way Valve (For Heat Pump Models

NOTE: .

WARNING

FIRE HAZARD

Evacuate the system and confirm that there is no refrigerant left in the system before removing the four-way valve and the compressor. (For R32 & R290, you should evacuate the system with the vacuum pump; flush the system with nitrogen; then repeat the two steps before heating up the brazed parts. The operations above should be implemented by professionals.)

PROCEDURES	ILLUSTRATION
1. Heat up the brazed parts and then detach the the four-way valve and the piper. (see illustration) 2. Remove the four-way valve assembly with pliers. (see illustration)	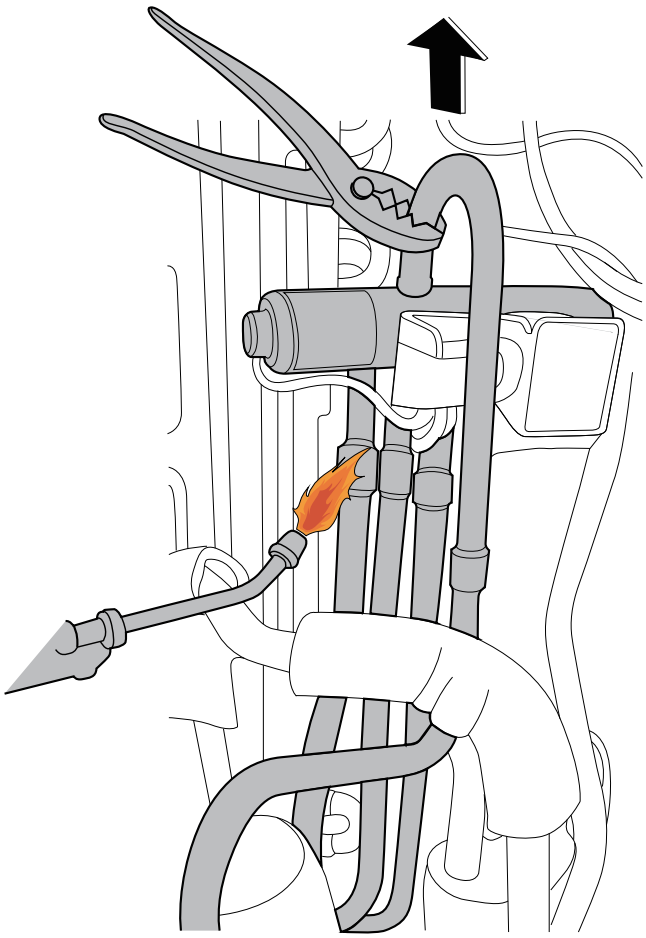

All Size Units, Disassembly - Compressor

⚠ WARNING

EXPLOSION RISK

Evacuate the system and confirm that there is no refrigerant left in the system before removing the four-way valve and the compressor. (For R32 & R290, you should evacuate the system with the vacuum pump; flush the system with nitrogen; then repeat the two steps before heating up the brazed parts. The operations above should be implemented by professionals.)

PROCEDURES	ILLUSTRATION
1. Remove the flange nut of terminal cover and remove the terminal cover (see illustration)	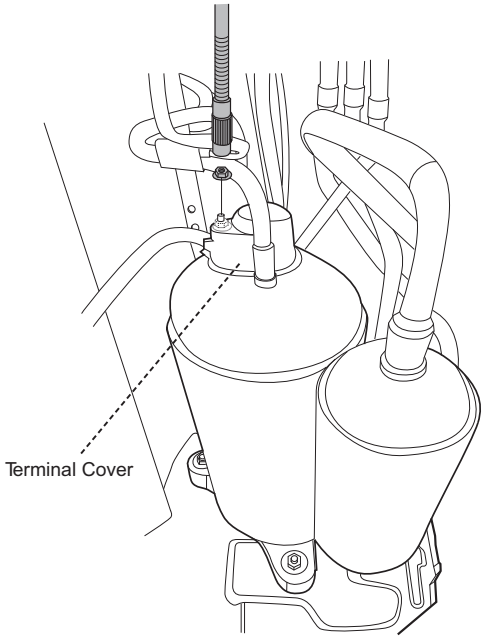
2. Disconnect the connectors (see illustration)	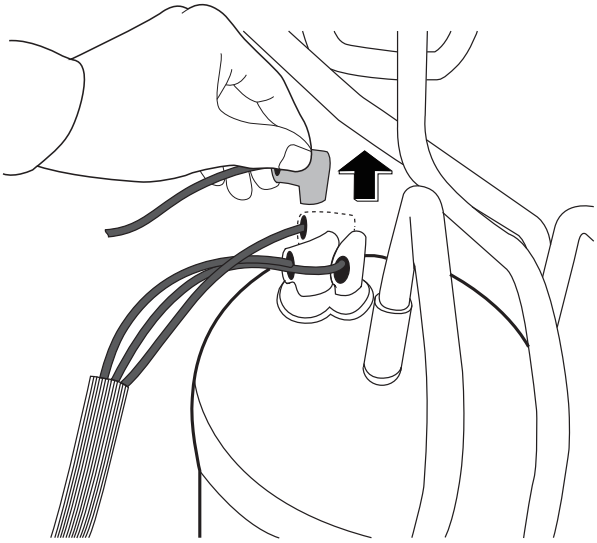

PROCEDURES	ILLUSTRATION
3. Remove the hex nuts and washers securing the compressor, located on the bottom plate. (see illustration)	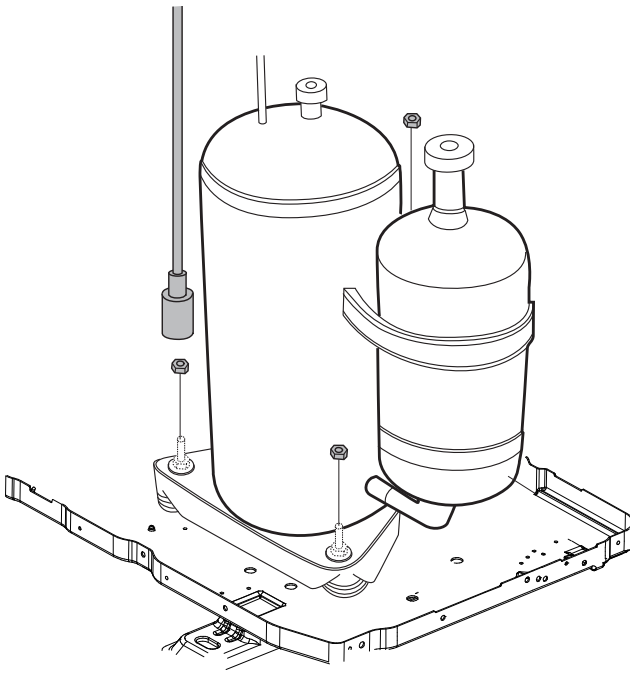
4. Heat up the brazed parts and then remove the discharge pipe and the suction pipe. (see illustration) 5. Lift the compressor from the base pan assembly with pliers. (see illustration)	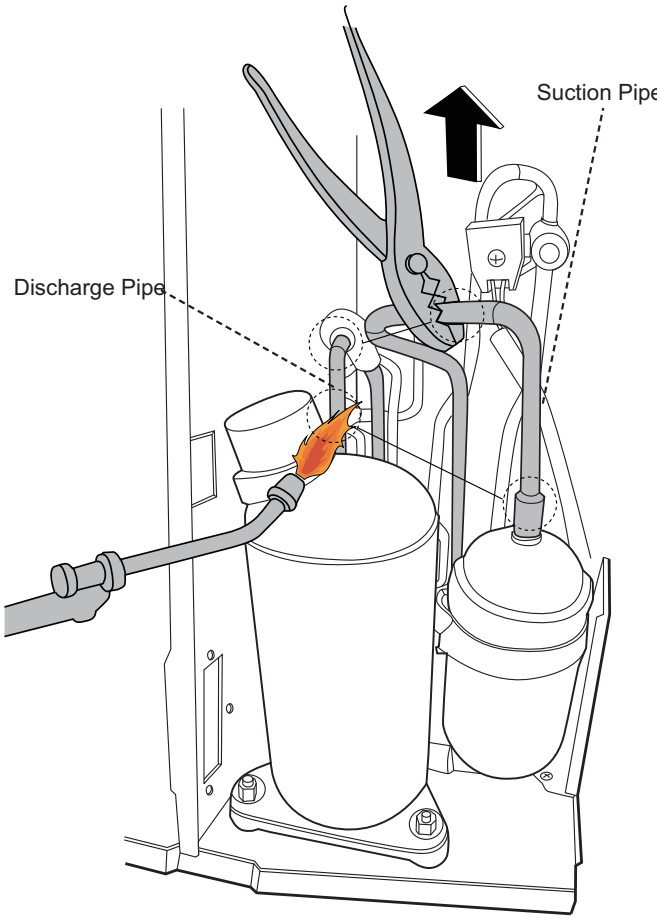

APPENDIX

Temperature Sensor Resistance Value Table for TP (°C - K)

°C	°F	K Ohm	°C	°F	K Ohm	°C	°F	K Ohm	°C	°F	K Ohm
-20	-4	542.7	20	68	68.66	60	140	13.59	100	212	3.702
-19	-2	511.9	21	70	65.62	61	142	13.11	101	214	3.595
-18	0	483	22	72	62.73	62	144	12.65	102	216	3.492
-17	1	455.9	23	73	59.98	63	145	12.21	103	217	3.392
-16	3	430.5	24	75	57.37	64	147	11.79	104	219	3.296
-15	5	406.7	25	77	54.89	65	149	11.38	105	221	3.203
-14	7	384.3	26	79	52.53	66	151	10.99	106	223	3.113
-13	9	363.3	27	81	50.28	67	153	10.61	107	225	3.025
-12	10	343.6	28	82	48.14	68	154	10.25	108	226	2.941
-11	12	325.1	29	84	46.11	69	156	9.902	109	228	2.86
-10	14	307.7	30	86	44.17	70	158	9.569	110	230	2.781
-9	16	291.3	31	88	42.33	71	160	9.248	111	232	2.704
-8	18	275.9	32	90	40.57	72	162	8.94	112	234	2.63
-7	19	261.4	33	91	38.89	73	163	8.643	113	235	2.559
-6	21	247.8	34	93	37.3	74	165	8.358	114	237	2.489
-5	23	234.9	35	95	35.78	75	167	8.084	115	239	2.422
-4	25	222.8	36	97	34.32	76	169	7.82	116	241	2.357
-3	27	211.4	37	99	32.94	77	171	7.566	117	243	2.294
-2	28	200.7	38	100	31.62	78	172	7.321	118	244	2.233
-1	30	190.5	39	102	30.36	79	174	7.086	119	246	2.174
0	32	180.9	40	104	29.15	80	176	6.859	120	248	2.117
1	34	171.9	41	106	28	81	178	6.641	121	250	2.061
2	36	163.3	42	108	26.9	82	180	6.43	122	252	2.007
3	37	155.2	43	109	25.86	83	181	6.228	123	253	1.955
4	39	147.6	44	111	24.85	84	183	6.033	124	255	1.905
5	41	140.4	45	113	23.89	85	185	5.844	125	257	1.856
6	43	133.5	46	115	22.89	86	187	5.663	126	259	1.808
7	45	127.1	47	117	22.1	87	189	5.488	127	261	1.762
8	46	121	48	118	21.26	88	190	5.32	128	262	1.717
9	48	115.2	49	120	20.46	89	192	5.157	129	264	1.674
10	50	109.8	50	122	19.69	90	194	5	130	266	1.632
11	52	104.6	51	124	18.96	91	196	4.849	?	?	?
12	54	99.69	52	126	18.26	92	198	4.703	?	?	?
13	55	95.05	53	127	17.58	93	199	4.562	?	?	?
14	57	90.66	54	129	16.94	94	201	4.426	?	?	?
15	59	86.49	55	131	16.32	95	203	4.294	?	?	?
16	61	82.54	56	133	15.73	96	205	4.167	?	?	?
17	63	78.79	57	135	15.16	97	207	4.045	?	?	?
18	64	75.24	58	136	14.62	98	208	3.927	?	?	?
19	66	71.86	59	138	14.09	99	210	3.812	?	?	?

Manufacturer reserves the right to change, at any time, specifications and designs without notice and without obligations.

Other Temperature Sensors Resistance Value Table (°C - K)

°C	°F	K Ohm	°C	°F	K Ohm	°C	°F	K Ohm	°C	°F	K Ohm
-20	-4	115.266	20	68	12.6431	60	140	2.35774	100	212	0.62973
-19	-2	108.146	21	70	12.0561	61	142	2.27249	101	214	0.61148
-18	0	101.517	22	72	11.5	62	144	2.19073	102	216	0.59386
-17	1	96.3423	23	73	10.9731	63	145	2.11241	103	217	0.57683
-16	3	89.5865	24	75	10.4736	64	147	2.03732	104	219	0.56038
-15	5	84.219	25	77	10	65	149	1.96532	105	221	0.54448
-14	7	79.311	26	79	9.55074	66	151	1.89627	106	223	0.52912
-13	9	74.536	27	81	9.12445	67	153	1.83003	107	225	0.51426
-12	10	70.1698	28	82	8.71983	68	154	1.76647	108	226	0.49989
-11	12	66.0898	29	84	8.33566	69	156	1.70547	109	228	0.486
-10	14	62.2756	30	86	7.97078	70	158	1.64691	110	230	0.47256
-9	16	58.7079	31	88	7.62411	71	160	1.59068	111	232	0.45957
-8	18	56.3694	32	90	7.29464	72	162	1.53668	112	234	0.44699
-7	19	52.2438	33	91	6.98142	73	163	1.48481	113	235	0.43482
-6	21	49.3161	34	93	6.68355	74	165	1.43498	114	237	0.42304
-5	23	46.5725	35	95	6.40021	75	167	1.38703	115	239	0.41164
-4	25	44	36	97	6.13059	76	169	1.34105	116	241	0.4006
-3	27	41.5878	37	99	5.87359	77	171	1.29078	117	243	0.38991
-2	28	39.8239	38	100	5.62961	78	172	1.25423	118	244	0.37956
-1	30	37.1988	39	102	5.39689	79	174	1.2133	119	246	0.36954
0	32	35.2024	40	104	5.17519	80	176	1.17393	120	248	0.35982
1	34	33.3269	41	106	4.96392	81	178	1.13604	121	250	0.35042
2	36	31.5635	42	108	4.76253	82	180	1.09958	122	252	0.3413
3	37	29.9058	43	109	4.5705	83	181	1.06448	123	253	0.33246
4	39	28.3459	44	111	4.38736	84	183	1.03069	124	255	0.3239
5	41	26.8778	45	113	4.21263	85	185	0.99815	125	257	0.31559
6	43	25.4954	46	115	4.04589	86	187	0.96681	126	259	0.30754
7	45	24.1932	47	117	3.88673	87	189	0.93662	127	261	0.29974
8	46	22.5662	48	118	3.73476	88	190	0.90753	128	262	0.29216
9	48	21.8094	49	120	3.58962	89	192	0.8795	129	264	0.28482
10	50	20.7184	50	122	3.45097	90	194	0.85248	130	266	0.2777
11	52	19.6891	51	124	3.31847	91	196	0.82643	131	268	0.27078
12	54	18.7177	52	126	3.19183	92	198	0.80132	132	270	0.26408
13	55	17.8005	53	127	3.07075	93	199	0.77709	133	271	0.25757
14	57	16.9341	54	129	2.95896	94	201	0.75373	134	273	0.25125
15	59	16.1156	55	131	2.84421	95	203	0.73119	135	275	0.24512
16	61	15.3418	56	133	2.73823	96	205	0.70944	136	277	0.23916
17	63	14.6181	57	135	2.63682	97	207	0.68844	137	279	0.23338
18	64	13.918	58	136	2.53973	98	208	0.66818	138	280	0.22776
19	66	13.2631	59	138	2.44677	99	210	0.64862	139	282	0.22231

Manufacturer reserves the right to change, at any time, specifications and designs without notice and without obligations.

System Pressure Table-R454B

Pressure			Temperature		Pressure			Temperature	
Kpa	bar	PSI	°C	°F	Kpa	bar	PSI	°C	°F
58.196	0.58	8.44	-60	-76	935.23	9.35	135.64	8	46.4
61.517	0.62	8.92	-59	-74.2	963.75	9.64	139.78	9	48.2
64.988	0.65	9.43	-58	-72.4	992.93	9.93	144.01	10	50
68.615	0.69	9.95	-57	-70.6	1022.8	10.23	148.34	11	51.8
72.402	0.72	10.50	-56	-68.8	1053.3	10.53	152.76	12	53.6
76.354	0.76	11.07	-55	-67	1084.5	10.85	157.29	13	55.4
80.478	0.80	11.67	-54	-65.2	1116.4	11.16	161.91	14	57.2
84.776	0.85	12.30	-53	-63.4	1149	11.49	166.64	15	59
89.256	0.89	12.95	-52	-61.6	1182.3	11.82	171.47	16	60.8
93.923	0.94	13.62	-51	-59.8	1216.3	12.16	176.40	17	62.6
98.781	0.99	14.33	-50	-58	1251.1	12.51	181.45	18	64.4
103.84	1.04	15.06	-49	-56.2	1286.6	12.87	186.60	19	66.2
109.1	1.09	15.82	-48	-54.4	1322.8	13.23	191.85	20	68
114.56	1.15	16.61	-47	-52.6	1359.9	13.60	197.23	21	69.8
120.25	1.20	17.44	-46	-50.8	1397.7	13.98	202.71	22	71.6
126.15	1.26	18.30	-45	-49	1436.3	14.36	208.31	23	73.4
132.28	1.32	19.18	-44	-47.2	1475.7	14.76	214.02	24	75.2
138.64	1.39	20.11	-43	-45.4	1515.9	15.16	219.85	25	77
145.24	1.45	21.06	-42	-43.6	1557	15.57	225.82	26	78.8
152.09	1.52	22.06	-41	-41.8	1598.9	15.99	231.89	27	80.6
159.18	1.59	23.09	-40	-40	1641.6	16.42	238.09	28	82.4
166.54	1.67	24.15	-39	-38.2	1685.2	16.85	244.41	29	84.2
174.15	1.74	25.26	-38	-36.4	1729.7	17.30	250.86	30	86
182.04	1.82	26.40	-37	-34.6	1775	17.75	257.43	31	87.8
190.2	1.90	27.59	-36	-32.8	1821.3	18.21	264.15	32	89.6
198.65	1.99	28.81	-35	-31	1868.4	18.68	270.98	33	91.4
207.39	2.07	30.08	-34	-29.2	1916.5	19.17	277.95	34	93.2
216.42	2.16	31.39	-33	-27.4	1965.6	19.66	285.08	35	95
225.76	2.26	32.74	-32	-25.6	2015.5	20.16	292.31	36	96.8
235.41	2.35	34.14	-31	-23.8	2066.5	20.67	299.71	37	98.6
245.37	2.45	35.59	-30	-22	2118.4	21.18	307.24	38	100.4
255.67	2.56	37.08	-29	-20.2	2171.3	21.71	314.91	39	102.2
266.29	2.66	38.62	-28	-18.4	2225.2	22.25	322.73	40	104
277.25	2.77	40.21	-27	-16.6	2280.2	22.80	330.70	41	105.8
288.56	2.89	41.85	-26	-14.8	2336.1	23.36	338.81	42	107.6
300.22	3.00	43.54	-25	-13	2393.2	23.93	347.09	43	109.4
312.24	3.12	45.28	-24	-11.2	2451.3	24.51	355.52	44	111.2
324.63	3.25	47.08	-23	-9.4	2510.4	25.10	364.09	45	113
337.39	3.37	48.93	-22	-7.6	2570.7	25.71	372.84	46	114.8
350.54	3.51	50.84	-21	-5.8	2632.1	26.32	381.74	47	116.6
364.08	3.64	52.80	-20	-4	2694.7	26.95	390.82	48	118.4
378.02	3.78	54.83	-19	-2.2	2758.3	27.58	400.04	49	120.2
392.37	3.92	56.91	-18	-0.4	2823.2	28.23	409.46	50	122
407.13	4.07	59.05	-17	1.4	2889.3	28.89	419.04	51	123.8

Manufacturer reserves the right to change, at any time, specifications and designs without notice and without obligations.

System Pressure Table-R454B (Continued)

Pressure			Temperature		Pressure			Temperature	
Kpa	bar	PSI	°C	°F	Kpa	bar	PSI	°C	°F
422.31	4.22	61.25	-16	3.2	2956.5	29.57	428.79	52	125.6
437.92	4.38	63.51	-15	5	3025	30.25	438.72	53	127.4
453.98	4.54	65.84	-14	6.8	3094.7	30.95	448.83	54	129.2
470.47	4.70	68.23	-13	8.6	3165.7	31.66	459.13	55	131
487.43	4.87	70.69	-12	10.4	3238.1	32.38	469.63	56	132.8
504.84	5.05	73.22	-11	12.2	3311.7	33.12	480.30	57	134.6
522.73	5.23	75.81	-10	14	3386.7	33.87	491.18	58	136.4
541.1	5.41	78.48	-9	15.8	3463	34.63	502.25	59	138.2
559.95	5.60	81.21	-8	17.6	3540.7	35.41	513.52	60	140
579.31	5.79	84.02	-7	19.4	3619.9	36.20	525.00	61	141.8
599.16	5.99	86.90	-6	21.2	3700.5	37.01	536.69	62	143.6
619.54	6.20	89.85	-5	23	3782.7	37.83	548.61	63	145.4
640.43	6.40	92.88	-4	24.8	3866.3	38.66	560.74	64	147.2
661.86	6.62	95.99	-3	26.6	3951.5	39.52	573.10	65	149
683.82	6.84	99.18	-2	28.4	4038.3	40.38	585.69	66	150.8
706.34	7.06	102.44	-1	30.2	4126.8	41.27	598.52	67	152.6
729.41	7.29	105.79	0	32	4217	42.17	611.60	68	154.4
753.06	7.53	109.22	1	33.8	4309	43.09	624.95	69	156.2
777.28	7.77	112.73	2	35.6	4402.9	44.03	638.56	70	158
802.08	8.02	116.33	3	37.4	4498.7	44.99	652.46	71	159.8
827.48	8.27	120.01	4	39.2	4596.5	45.97	666.64	72	161.6
853.49	8.53	123.78	5	41	4696.5	46.97	681.15	73	163.4
880.11	8.80	127.64	6	42.8	4798.9	47.99	696.00	74	165.2
907.35	9.07	131.60	7	44.6	4904.1	49.04	711.25	75	167

Manufacturer reserves the right to change, at any time, specifications and designs without notice and without obligations.

© 2025 Carrier. All rights reserved.
Edition Date: 09/25
Catalog No: **D5CVRA-01SM**

A Proud Member of the Carrier Family
Replaces: New

Manufacturer reserves the right to change, at any time, specifications and designs without notice and without obligations.