PGR5
15.2+ SEER2 2-Stage Packaged Air Conditioner and Gas Furnace System with R-410A Refrigerant Single and Three Phase 2 to 5 Nominal Tons (Sizes 24-60)

TEMPSTAR®
Heating and Cooling Products

Product Data

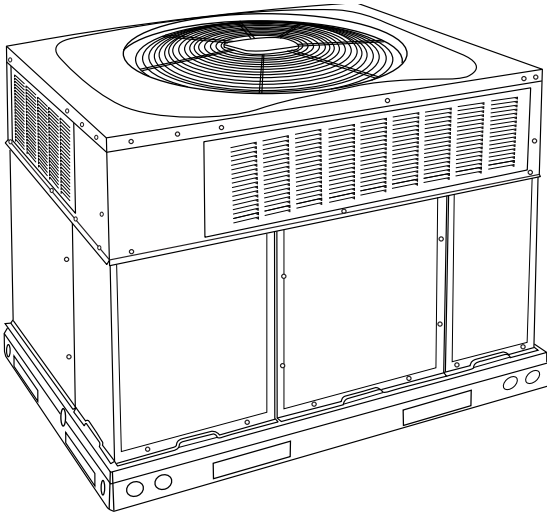

A09033

Fig. 1 – Unit PGR5

Single-Packaged Products with Energy-Saving Features and R-410A refrigerant.

- Up to 16.0 SEER2
- 11.5 EER2
- 81% AFUE
- Meets Energy Star requirements
- Direct Spark Ignition
- Factory-Installed TXV
- Multi-speed ECM Blower Motor-Standard
- Sound Levels as low as 70dBA
- Two Stage Cooling
- Two Stage Heating (208/230 VAC models)
- Two Stage Dehumidification Feature
- Cabinet air leakage of 2.0% or less at .5 in. W.C. when tested in accordance with ASHRAE standard 193.

Features/Benefits

One-piece heating and cooling units with low sound levels, easy installation, low maintenance, and dependable performance.

Easy Installation

Factory-assembled package is a compact, fully self-contained, combination gas heating/electric cooling unit that is prewired, pre-piped, and pre-charged for minimum installation expense. These units are available in a variety of standard and optional heating/cooling size combinations with voltage options to meet residential and light commercial requirements. Units are lightweight and install easily on a rooftop or at ground level. The high tech composite base eliminates rust problems associated with ground level applications.

Innovative Unit Base Design

On the inside a high-tech composite material will not rust and incorporates a sloped drain pan which improves drainage and helps inhibit mold, algae and bacterial growth. On the outside metal base rails provide added stability as well as easier handling and rigging.

Convertible duct configuration

Unit is designed for use in either downflow or horizontal applications. Each unit is converted from horizontal to downflow and includes two horizontal duct covers. Downflow operation is provided in the field to allow vertical ductwork connections. The basepan seals on the bottom openings to ensure a positive seal in the vertical airflow mode.

Efficient Operation

High-efficiency design offers SEER2 (Seasonal Energy Efficiency Ratios) of up to 16.0, 11.5 EER2, and AFUE (Annual Fuel Utilization Efficiency) ratings as high as 81%.

Energy-saving, direct spark ignition saves gas by operating only when the room thermostat calls for heating. Standard units are furnished with natural gas controls. A low-cost field installed kit for propane conversion is available for all units.

Low NOx units are designed for California installations and meet 40 ng/J NOx emissions. Can be installed in air quality management districts with a 40 ng/J NOx emissions requirement.

Durable, dependable components

Compressors have two stages of cooling and are designed for high efficiency. Each compressor is hermetically sealed against contamination to help promote longer life and dependable operation. Each compressor also has vibration isolation to provide quieter operation. All compressors have internal high pressure and overcurrent protection.

Monoport inshot burners produce precise air-to-gas mixture, which provides for clean and efficient combustion. The large monoport on the inshot (or injection type) burners seldom, if ever, requires cleaning. All gas furnace components are accessible in one compartment.

Turbo-tubular™ heat exchangers are constructed of stainless steel for corrosion resistance and optimum heat transfer for improved efficiency. The tubular design permits hot gases to make multiple passes across the path of the supply air.

In addition, dimples located on the heat exchanger walls force the hot gases to stay in close contact with the walls, improving heat transfer.

Multi-speed ECM Blower Motor is standard on all models.

High Efficiency 2-Speed Inducer Motor on single phase models.

Direct-drive PSC (Permanent Split Capacitor) condenser-fan motors are designed to help reduce energy consumption and provide for cooing operation down to 40°F (4.4°C) outdoor temperature. Low ambient kit is available as a field-installed accessory.

Thermostatic Expansion Valve - A hard shutoff, balance port TXV maintains a constant superheat at the evaporator exit (cooling cycle) resulting in higher overall system efficiency.

Refrigerant system is designed to provide dependability. Liquid filter driers are used to promote clean, unrestricted operation. Each unit leaves the factory with a full refrigerant charge. Refrigerant service connections make checking operating pressures easier.

High and Low Pressure Switches provide added reliability for the compressor.

Indoor and Outdoor coils are computer-designed for optimum heat transfer and efficiency. The indoor coil is fabricated from copper tube and aluminum fins and is located inside the unit for protection against damage. The outdoor coil is internally mounted on the top tier of the unit.

Low sound ratings ensure a quiet indoor and outdoor environment with sound ratings as low as 70dBA.

Dehumidification Feature

This unit has independent fan speeds for low stage cooling and high stage cooling. In addition, 208/230 VAC models have the field-selectable capability to run enhanced dehumidification ('DHUM') speeds on high stage cooling and low stage cooling (as low as 320CFM per ton). Coupled with the improved dehumidification associated with low stage cooling, the DHUM speeds allow for a complete dehumidification solution independent of cooling stage. 208/230 VAC models also have independent fan speeds for low stage gas heating and high stage gas heating. The dehumidification control must open the control circuit on humidity rise above the dehumidification set point.

Heating

- Reliable direct spark ignition system
- Inducer motors with ball bearings
- Low stage heating delivers 65% of high-stage capacity (208/230 VAC models)

Easy to service cabinets provide easy 3-panel accessibility to serviceable components during maintenance and installation. The basepan with integrated drain pan provides easy ground level installation with mounting pad. A nesting feature ensures a positive basepan to roof curb seal when the unit is roof mounted. A convenient 3/4-in. (19.05 mm) wide perimeter flange makes frame mounting on a rooftop easy.

Standard horizontal metal duct covers with insulation come with the unit and cover the horizontal duct openings. These can be left in place if the units are converted to downflow.

Integrated Gas Control (IGC) board provides safe and efficient control of heating and simplifies trouble-shooting through its built-in diagnostic function.

Cabinets are constructed of heavyduty, phosphated, zinc-coated prepainted steel capable of withstanding 500 hours in salt spray. Interior surfaces of the evaporator/heat exchanger compartment are insulated with foil-faced insulation, which keeps the conditioned air from being affected by the outdoor ambient temperature and provides improved indoor air quality. (Conforms to American Society of Heating, Refrigeration and Air Conditioning Engineers 62.2.) The sloped drain pan minimizes standing water in the drain. An external drain is provided.

Louvered grille provides hail and vandalism protection for the coil.

Limited Warranty*

- Default 5-year no hassle limited warranty
- Default 20-year heat exchanger limited warranty
  - Lifetime limited warranty on heat exchanger with timely registration. Equipment must be registered within 90 days of original installation, except in jurisdictions where warranty benefits cannot be conditioned on registration.

* Applies to original purchaser/homeowner and 20 years to subsequent owners.

- Default 5-year parts limited warranty (including compressor and coil)
  - 10-year parts limited warranty (including compressor and coil) with timely registration. Equipment must be registered within 90 days of original installation, except in jurisdictions where warranty benefits cannot be conditioned on registration.

* Applies to original purchaser/homeowner and 5 years to subsequent owners.

Table of Contents

Features/Benefits 1
Efficient Operation. 1
Durable, dependable components 1
Limited Warranty*. 2
Heating Capacities and Efficiencies 5
A-Weighted Sound Power Level (dBA). 5
Physical Data 6
024 Low Cool 12
036 Low Cool 13
048 Low Cool 14
060 Low Cool 15
Gas Adjustment 17
Dry Coil Air Delivery** - Horizontal and Downflow Discharge Sizes
24-60 208/230 VAC - 1, 3 Phase. 19
Wet Coil Pressure Drop (IN. W.C.). 38
Economizer with 1-in. Filter Pressure Drop (IN. W.C.) 39
Filter Pressure Drop Table (IN. W.C.). 39
Guide Specifications. 48

Model Number Nomenclature

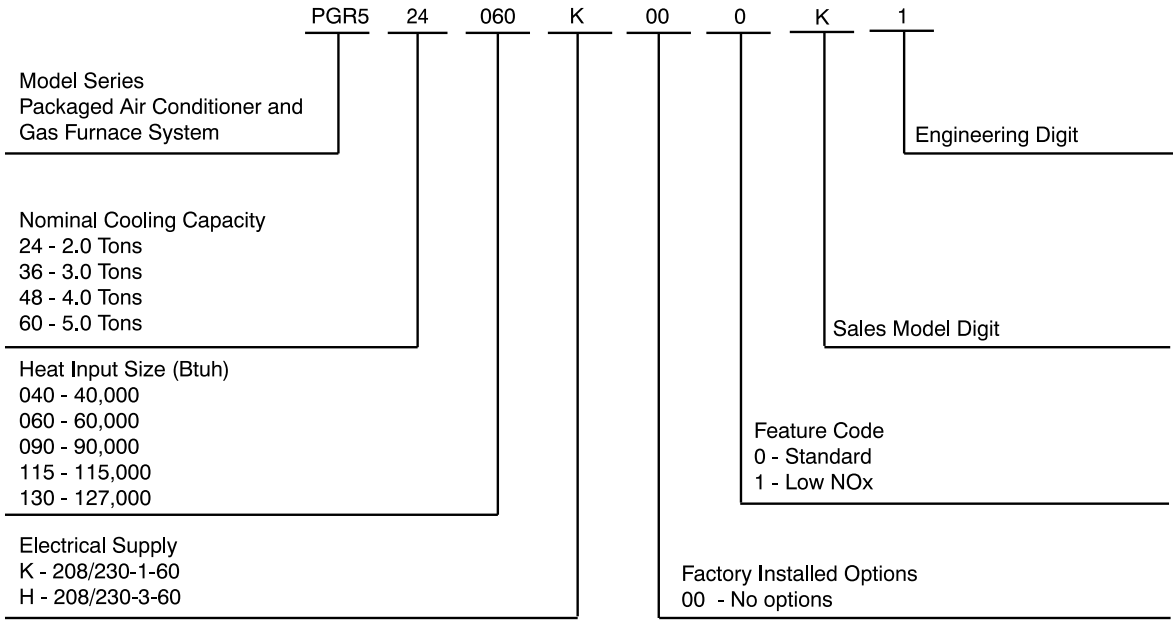

Use of the AHRI Certified TM Mark indicates a manufacturer's participation in the program For verification of certification for individual products, go to www.ahridirectory.org.

For California Residents:

This furnace does not comply with SCAQMD Rule 1111 or SJVAPCD Rule 4905, which places a NOx emission limit of 14 ng/J. Therefore, this unit is not eligible to be installed in the South Coast Air Quality Management District (SCAQMD) nor the San Joaquin Valley Air Pollution Control District (SJVAPCD).

SAP ORDERING NO.	NOMINAL COOLING CAPACITY (Btuh)	NOMINAL HEATING INPUT (Btuh)	VOLTS-PHASE (60 HZ)	APPROX SHIP WT (LB)
PGR524040K000K	24,000	40,000	208/230-1	352
PGR524060K000K	24,000	60,000	208/230-1	352
PGR536060K000K	36,000	60,000	208/230-1	455
PGR536060H000K	36,000	60,000	208/230-3	455
PGR536090K000K	36,000	90,000	208/230-1	455
PGR536090H000K	36,000	90,000	208/230-3	455
PGR548090K000K	48,000	90,000	208/230-1	500
PGR548090H000K	48,000	90,000	208/230-3	500
PGR548115K000K	48,000	115,000	208/230-1	500
PGR548115H000K	48,000	115,000	208/230-3	500
PGR548130K000K	48,000	127,000	208/230-1	500
PGR548130H000K	48,000	130,000	208/230-3	500
PGR560090K000K	60,000	90,000	208/230-1	520
PGR560090H000K	60,000	90,000	208/230-3	520
PGR560115K000K	60,000	115,000	208/230-1	520
PGR560115H000K	60,000	115,000	208/230-3	520
PGR560130K000K	60,000	127,000	208/230-1	520
PGR560130H000K	60,000	130,000	208/230-3	520
Low NOx UNITS				
PGR524040K001K	24,000	40,000	208/230-1	352
PGR524060K001K	24,000	60,000	208/230-1	352
PGR536060K001K	36,000	60,000	208/230-1	455
PGR536060H001K	36,000	60,000	208/230-3	455
PGR536090K001K	36,000	90,000	208/230-1	455
PGR536090H001K	36,000	90,000	208/230-3	455
PGR548090K001K	48,000	90,000	208/230-1	500
PGR548090H001K	48,000	90,000	208/230-3	500
PGR548115K001K	48,000	115,000	208/230-1	500
PGR548115H001K	48,000	115,000	208/230-3	500
PGR548130K001K	48,000	127,000	208/230-1	500
PGR548130H001K	48,000	130,000	208/230-3	500
PGR560090K001K	60,000	90,000	208/230-1	520
PGR560090H001K	60,000	90,000	208/230-3	520
PGR560115K001K	60,000	115,000	208/230-1	520
PGR560115H001K	60,000	115,000	208/230-3	520
PGR560130K001K	60,000	127,000	208/230-1	520
PGR560130H001K	60,000	130,000	208/230-3	520

Manufacturer reserves the right to change, at any time, specifications and designs without notice and without obligations.

AHRI* Capacities

Cooling Capacities and Efficiencies

Unit Size	Nominal Tons	Standard CFM (High / Low Stage)	Net Cooling Capacities - Btuh (High Stage)	EER2 @A**	SEER2†
24	2	800 / 600	22200	11.5	15.2
36	3	1200 / 900	34800	11.5	15.2
48	4	1600 / 1200	46500	11.8	16.0
60	5	1750 / 1200	56000	11.5	15.2

LEGEND
dB-Sound Levels (decibels)
db—Dry Bulb
SEER—Seasonal Energy Efficiency Ratio
wb—Wet Bulb
COP-Coefficient of Performance
* Air Conditioning, Heating & Refrigeration Institute.
**At "A" conditions-80°F (26.7°C) indoor db/67°F (19.4°C) indoor wb & 95°F (35°C) outdoor db.
† Rated in accordance with U.S. Government DOE Department of Energy) test procedures and/or AHRI Standards 210/240.
Notes:
1. Ratings are net values, reflecting the effects of circulating fan heat.
Ratings are based on:
Cooling Standard: 80°F (26.7°) db, 67°F wb (19.4°C) indoor entering-air temperature and 95°F db (35°C) outdoor entering-air temperature.
2. Before purchasing this appliance, read important energy cost and efficiency information available from AHRIdirectory.org.

Heating Capacities and Efficiencies

Unit Size	Heating Input (Btuh) High/Low	Output Capacity (Btuh) High / Low	Temperature Rise Range High °F (°C)	Temperature Rise Range Low °F (°C)	AFUE (%)
24040	40,000 / 26,000	33,000 / 22,000	25-55 (14-31)	25-55 (14-31)	81.0
24060 36060	60,000 / 39,000	49,000 / 32,000	25-55 (14-31)	25-55 (14-31)	81.0
36090 48090 60090	90,000 / 58,500	74,000 / 48,000	35-65 (19-36)	35-65 (19-36)	81.0
48115 60115	115,000 / 75,000	94,000 / 62,000	30-60 (17-33)	30-60 (17-33)	81.0
48130 60130	127,000 / 84,500	104,000 / 70,000	35-65 (19-36)	35-65 (19-36)	81.0

LEGEND
AFUE - Annual Fuel Utilization Efficiency
NOTE: Before purchasing this appliance, read important energy cost and efficiency information available from AHRIdirectory.org.
NOTE: 460 VAC units are single stage heat only.

A-Weighted Sound Power Level (dBA)

Unit Size	Sound Ratings (dBA)	Typical Octave Band Spectrum (dBA without tone adjustment)						
		125	250	500	1000	2000	4000	8000
24	70	54.9	58.1	57.9	60.1	55.3	54.5	47.4
36	73	62.5	65.5	67.5	68.0	65.5	60.0	52.5
48	72	60.0	63.5	66.0	67.0	63.5	58.5	49.5
60	75	69.0	67.0	69.0	68.0	65.0	61.5	54.0

NOTE: Tested in compliance with AHRI 270 but not listed with AHRI.

Physical Data

UNIT SIZE	24040	24060	36060	36090	48090	48115	48130	60090	60115	60130
NOMINAL CAPACITY (ton)	2	2	3	3	4	4	4	5	5	5
SHIPPING WEIGHT** lb.	352	352	455	455	500	500	500	520	520	520
SHIPPING WEIGHT** (kg)	160	160	206	206	227	227	227	236	236	236
COMPRESSORS	2-Stage Scroll									
Quantity	1									
REFRIGERANT (R-410A)										
Quantity lb.	7.05	7.05	8.1	8.1	10.8	10.8	10.8	12.1	12.1	12.1
Quantity (kg)	3.2	3.2	3.7	3.7	4.9	4.9	4.9	5.5	5.5	5.5
REFRIGERANT METERING DEVICE	TXV									
OUTDOOR COIL										
Rows...Fins/in.	1..21	1...21	2...21	2...21	2...21	2...21	2...21	2...21	2...21	2...21
Face Area (sq ft)	13.6	13.6	13.6	13.6	19.4	19.4	19.4	21.4	21.4	21.4
OUTDOOR FAN										
Nominal CFM	2500	2500	3000	3000	3300	3300	3300	3600	3600	3600
Diameter in.	24	24	26	26	26	26	26	26	26	26
Diameter (mm)	609.6	609.6	600.4	600.4	660.4	660.4	660.4	660.4	660.4	660.4
Motor Hp (Rpm)	1/12 (810)	1/12 (810)	1/5 (810)	1/5 (810)	1/5 (810)	1/5 (810)	1/5 (810)	1/5 (810)	1/5 (810)	1/5 (810)
INDOOR COIL										
Rows...Fins/in.	3...17	3...17	3...17	3...17	3...17	3...17	3...17	3...17	3...17	3...17
Face Area (sq ft)	3.7	3.7	4.7	4.7	5.7	5.7	5.7	5.7	5.7	5.7
INDOOR BLOWER										
Nominal Low Stage Cooling Airflow (Cfm)	600	600	900	900	1200	1200	1200	1200	1200	1200
Nominal High Stage Cooling Airflow (Cfm)	800	800	1200	1200	1600	1600	1600	1750	1750	1750
Size in.	10x10	10x10	11x10	11x10	11x10	11x10	11x10	11x10	11x10	11x10
Size (mm.)	254x254	254x254	279.4x254	279.4x254	279.4x254	279.4x254	279.4x254	279.4x254	279.4x254	279.4x254
Motor HP (RPM)	1/2 (1050)	1/2 (1050)	3/4 (1000)	3/4 (1000)	1.0 (1075)	1.0 (1075)	1.0 (1075)	1.0 (1075)	1.0 (1075)	1.0 (1075)
FURNACE SECTION*										
Burner Orifice No. (Qty...Drill Size)										
Natural Gas (Factory Installed)	2...44	3...44	3...44	3…38	3...38	3...33	3...31	3...38	3...33	3...31
Propane Gas	2...55	3...55	3...55	3…53	3...53	3...51	3...49	3...53	3...51	3...49
HIGH-PRESSURE SWITCH	650 +/- 15									
(psig) Cut-out Reset (Auto)	420 +/- 25									
LOSS-OF-CHARGE/LOW-PRESSURE	50 +/-7									
SWITCH (psig) cut-out Reset (auto)	95 +/- 7									
DUCT RETURN-AIR FILTERS†‡										
Throwaway Size in.	20x20x1	20x24x1	24x30x1							
(mm)	508x508x25	508x610x25	610x762x25		24x36x1(610x914x25)					

*Based on altitude of 0 to 2000 ft (0-610 m).

†Required filter sizes shown are based on the larger of the AHRI (Air Conditioning Heating and Refrigeration Institute) rated cooling airflow or the heating airflow velocity of 300 ft/minute for throwaway type. Air filter pressure drop for non-standard filters must not exceed 0.08 IN. W.C.

‡If using accessory filter rack refer to the filter rack installation instructions for correct filter sizes and quantity.

Manufacturer reserves the right to change, at any time, specifications and designs without notice and without obligations.

Accessories

Accessory Model Number	Description	Use With
CPRFCURB011B00*	Roof Curb, 14-in. High	24
CPRFCURB013B00	Roof Curb, 14-in. High	36 - 60
CPADCURB001A00†	Adapter curb for use with NPRFCURB006A00 & NPRFCURB007A00	24
CPADCURB002A00†	Adapter curb for use with NPRFCURB008A00 & NPRFCURB009A00	36 - 60
NPCONADP001A00	For 18-in. round duct (use with curbs CPRFCURB011B00)	Small Curb
NPCONADP002A00	For 18-in. round duct (use with curbs CPRFCURB013B00)	Large Curb
CPGSKTKIT001A00	Gasket Kit for existing roof curb with new base rail unit	24
CPMANDPR007A00	Manual Outside Air Damper - (Includes filter rack and 1-in. filter, same as CPFILTRK kit)	24
CPMANDPR008A00		36
CPMANDPR009A00		48 - 60
ECD-SDSML-JC2-ADB†	Vertical economizer with Jade Honeywell W7220 controller, Honeywell communicating actuator, and dry bulb sensor. (Contact MicroMetl Customer Service at 1-800-662-4822 to order)	24
ECD-SDLGS-JC2-ADB†		36
ECD-SDLGB-JC2-ADB†		48 - 60
ECH-SDSML-JC2-ADB†	Horizontal economizer with Jade Honeywell W7220 controller, Honeywell communicating actuator, and dry bulb sensor. (Contact MicroMetl Customer Service at 1-800-662-4822 to order)	24
ECH-SDLGS-JC2-ADB†		36
ECH-SDLGB-JC2-ADB†		48 - 60
CPFILTRK007A00	Internal Filter Rack (includes 1-in. filters)	24
CPFILTRK008A00		36
CPFILTRK009A00		48 - 60
CPLOWAMB001A00	Low Ambient Control	All
NRTIMEGD001A00	Five Minute Compressor Delay	All
CPHSTART002A00	PTC Compressor Start Assist Kit	All
CPCRKHTR008A00	240V Crankcase Heater	24 - 36 Single Phase
CPCRKHTR004A00		48 Single Phase
Standard		36 - 60 3-Phase 60 Single Phase
NPLPCONV013C00‡	Natural to LP Conversion Kit (0 - 2000 ft)	All (except Ultra Low NOx)
NPLPCONV014C00‡	Natural to LP Conversion Kit (2001 - 6000 ft)	All (except Ultra Low NOx)
NPNGCONV002C00‡	LP to Natural Gas Conversion Kit (0 - 2000 ft)	All (except Ultra Low NOx)
CPFLUEDS001A00	Flue Discharge Deflector Assembly	All
DUCFLG002A00	Square to Round (1 set of 2, use with horizontal duct flanges only)	24 - 48

*. CPFRCURB011B00 can be used with 36-60 size units with some overhang.
†. Contact MicroMetal Customer Service at 1-800-662-4822 to order.
‡. Three phase models may use “B00” or “C00” versions.

Unit Dimensions - 24

COOLING CAPACITY	UNIT WT.		UNIT HEIGHT IN/MM	CENTER OF GRAVITY IN/MM		
	LB	KG	"A"	X	Y	Z
24	344	156.1	45-3/4 1121	22-13/16 579.4	15-5/16 388.9	15-13/16 401.6

UNIT	CORNER WEIGHT LB/KG							
	"1"		"2"		"3"		"4"	
24	87.9	39.9	77.6	35.2	84.1	38.2	94.4	42.8

NOTE: 1. ALL TABLE DATA RELEVANT FOR ALL FACTORY INSTALLED OPTIONS EXCEPT ECONOMIZER.
2. * - INDICATES ALL FIOP CODES FOR THE MODELS LISTED.

REQUIRED CLEARANCES TO COMBUSTIBLE MATL.

	INCHES [MM]
TOP OF UNIT	4 [355.6]
DUCT SIDE OF UNIT	2 [50.8]
SIDE OPPOSITE DUCTS	14 [355.6]
BOTTOM OF UNIT	1/2 [12.7]
FLUE PANEL	36 [914.4]

NEC. REQUIRED CLEARANCES.

	INCHES [MM]
BETWEEN UNITS, POWER ENTRY SIDE	42 [1066.8]
UNIT AND UNGROUNDED SURFACES, POWER ENTRY SIDE	36[914.0]
UNIT AND BLOCK OR CONCRETE WALLS AND OTHER GROUNDED SURFACES, POWER ENTRY SIDE	42 [1066.8]

REQUIRED CLEARANCE FOR OPERATION AND SERVICING

	INCHES [MM]
EVAP. COIL ACCESS SIDE	36 [914.0]
POWER ENTRY SIDE (EXCEPT FOR NEC REQUIREMENTS)	42 [1066.8]
UNIT TOP	48 [1219.2]
SIDE OPPOSITE DUCTS	36 [914.0]
DUCT PANEL	12 [304.8]*

*MINIMUM DISTANCES:IF UNIT IS PLACED LESS THAN 12 [304.8] FROM WALL SYSTEM,THEN SYSTEM PERFORMANCE MAYBE COMPROMISED.

DIMENSIONS IN [] ARE IN MM

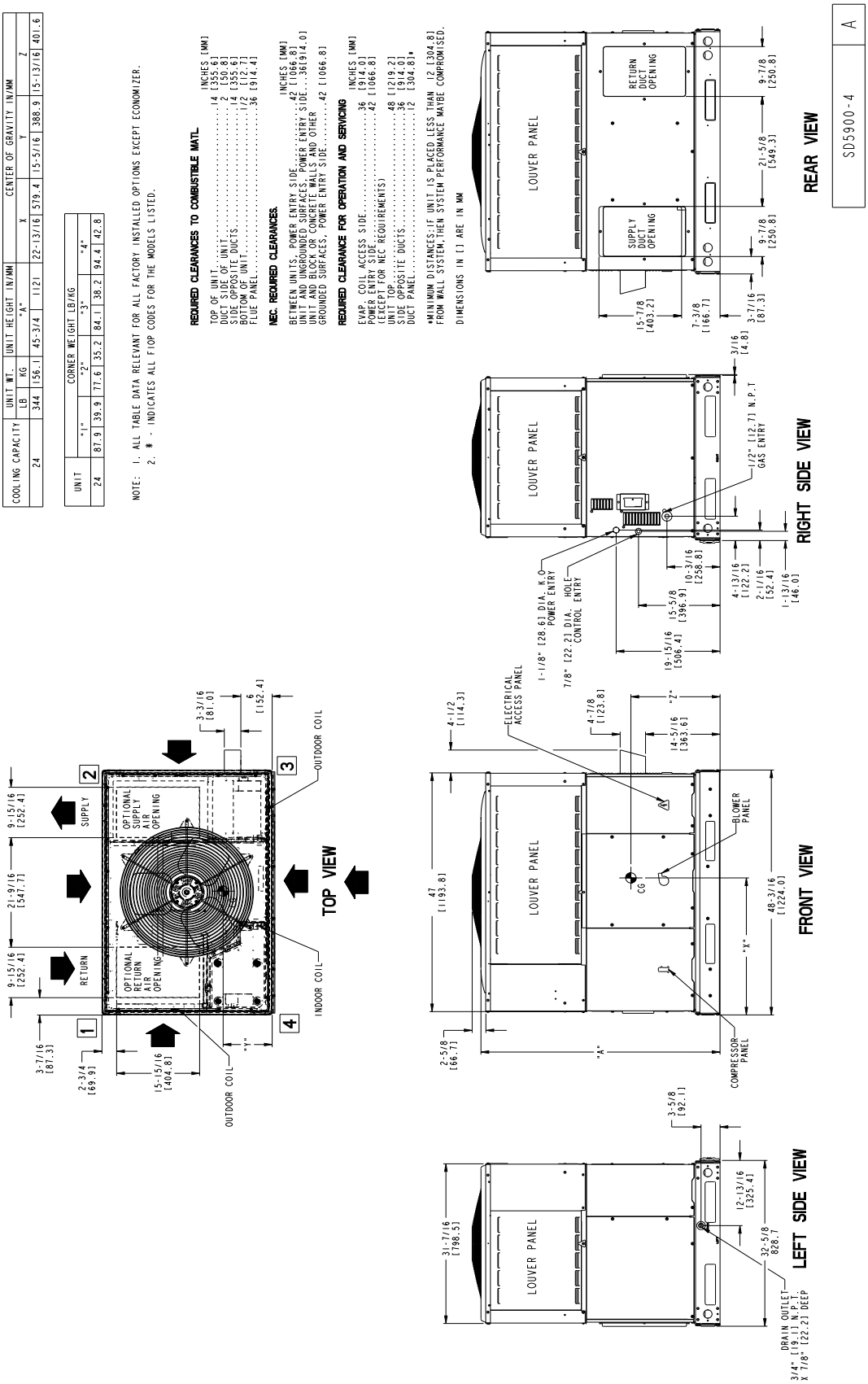

A230027

Unit Dimensions - 36-60

COOLING CAPACITY	UNIT WT.		UNIT HEIGHT IN/MM	CENTER OF GRAVITY IN/MM					
	LB	KG	"A"	X		Y		Z	
36	447	202.8	44-3/4	1137	22-13/16	579.4	18	457.2	17-1/8	435.0
48	492	223.2	50-3/4	1289	22-13/16	579.4	18	457.2	17-3/8	441.3
60	512	232.2	52-3/4	1340	22-13/16	579.4	18	457.2	17-5/8	447.7

UNIT	CORNER WEIGHT LB/KG							
	"1"		"2"		"3"		"4"	
36	97.5	44.3	86.4	39.2	123.9	56.2	140.2	63.6
48	107.0	48.5	95.3	43.2	136.1	61.8	153.6	69.7
60	110.9	50.3	98.6	44.7	142.2	64.5	160.2	72.7

NOTE: 1. ALL TABLE DATA RELEVANT FOR ALL FACTORY INSTALLED OPTIONS EXCEPT ECONOMIZER.
2. * - INDICATES ALL FIOP CODES FOR THE MODELS LISTED.

REQUIRED CLEARANCES TO COMBUSTIBLE MATL.

	INCHES [MM]
TOP OF UNIT	14 [355.6]
DUCT SIDE OF UNIT	2 [50.8]
SIDE OPPOSITE DUCTS	14 [355.6]
BOTTOM OF UNIT	12 [12.7]
FLUE PANEL	36 [914.4]

NEC. REQUIRED CLEARANCES.

	INCHES [MM]
BETWEEN UNITS, POWER ENTRY SIDE	42 [1066.8]
UNIT AND UNGROUNDED SURFACES, POWER ENTRY SIDE	36 [914.0]
UNIT AND BLOCK OR CONCRETE WALLS AND OTHER GROUNDED SURFACES, POWER ENTRY SIDE	42 [1066.8]

REQUIRED CLEARANCE FOR OPERATION AND SERVICING

	INCHES [MM]
EVAP. COIL ACCESS SIDE	36 [914.0]
POWER ENTRY SIDE	42 [1066.8]
(SEE NEC FOR NEC REQUIREMENTS)	
UNIT TOP	48 [1219.2]
SIDE OPPOSITE DUCTS	36 [914.0]
DUCT PANEL	12 [304.8]*

*MINIMUM DISTANCES.IF UNIT IS PLACED LESS THAN 12 [304.8] FROM WALL SYSTEM,THEN SYSTEM PERFORMANCE MAYBE COMPROMISED.

DIMENSIONS IN [] ARE IN MM

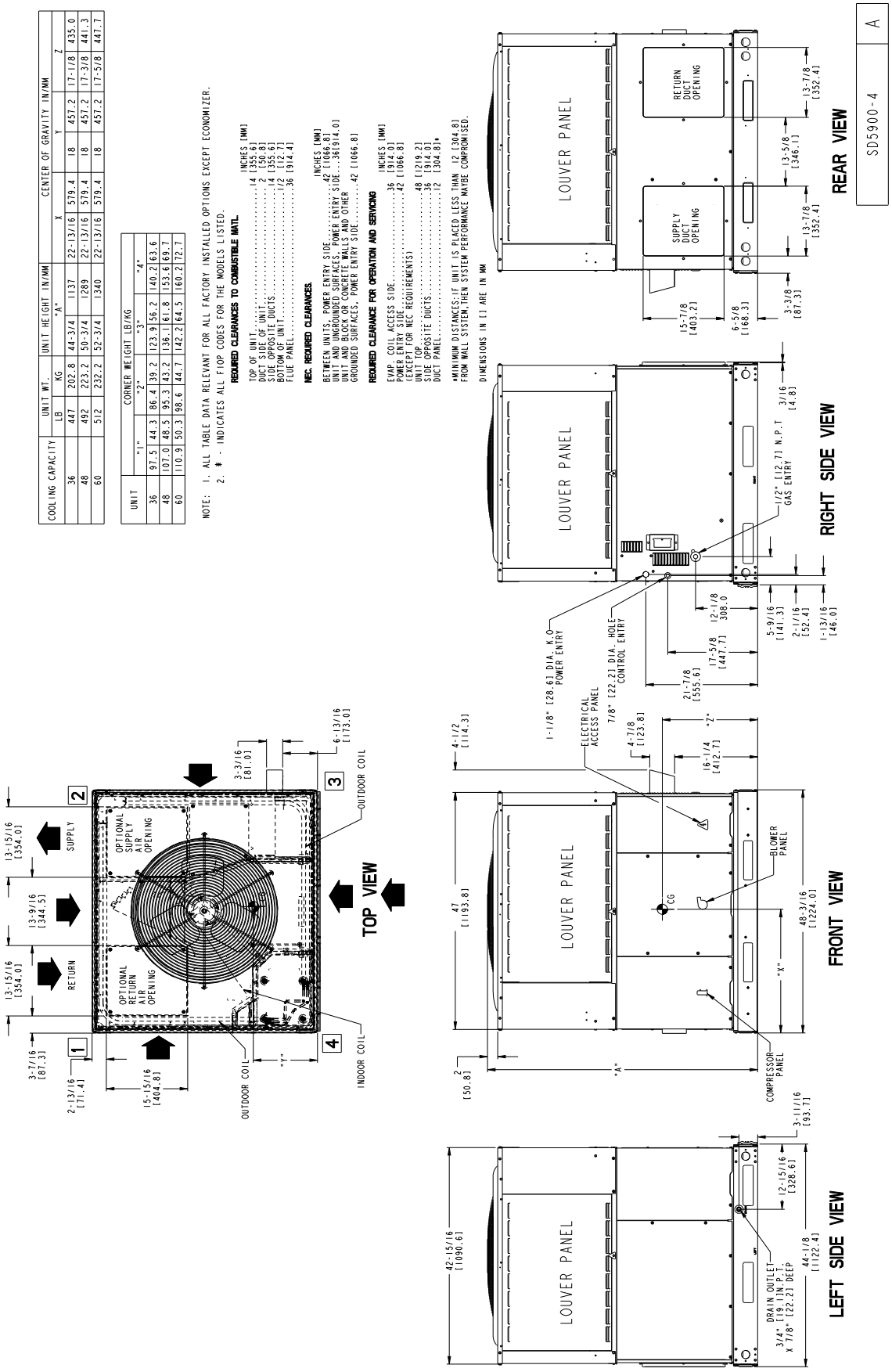

A230028

Accessory Dimensions

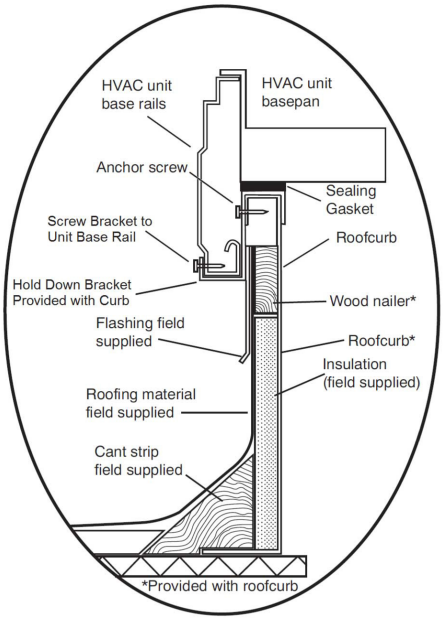

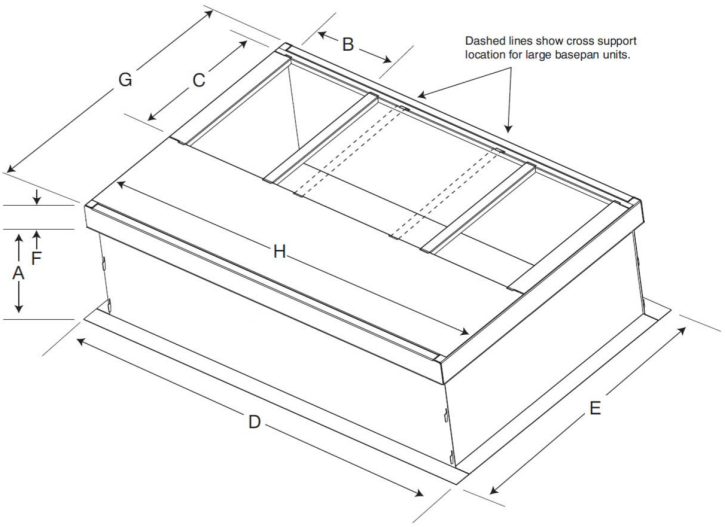

SMALL/COMMON CURB

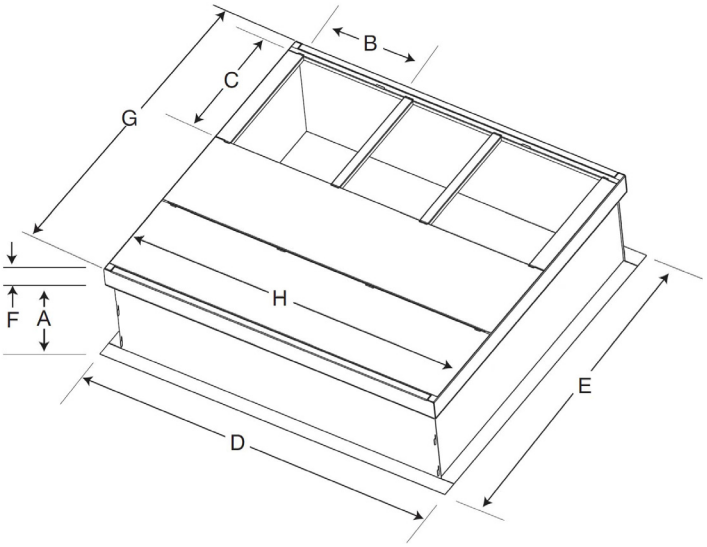

LARGE CURB

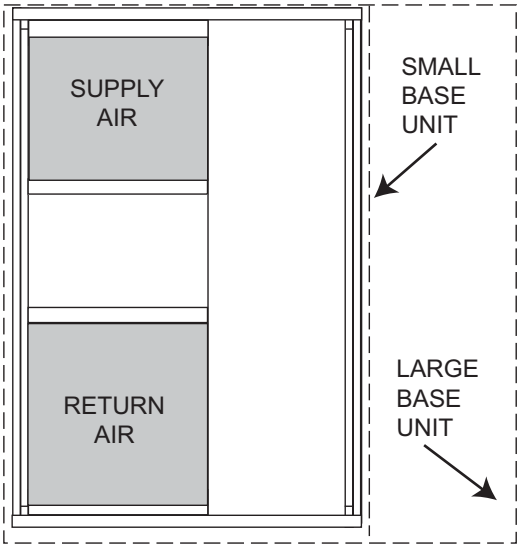

UNIT PLACEMENT ON COMMON CURB

SMALL OR LARGE BASE UNIT

A180216

Unit Size	Catalog Number	A in. (mm)	B (small / common base) in. (mm)*	B (large base) in. (mm)*	C in. (mm)	D in. (mm)	E in. (mm)	F in. (mm)	G in. (mm)	H in. (mm)
Small or Large	CPRFCURB011B00	14 (356)	10 (254)	14 (356)	16 (406)	47.8 (1214)	32.4 (822)	2.7 (69)	30.6 (778)	46.1 (1170)
Large	CPRFCURB013B00	14 (356)	14 (356)				43.9 (1116)		42.2 (1072)	

* Part Number CPRCURB011B00 can be used on both small and large basepan units. The cross supports must be located based on whether the unit is a small basepan or a large basepan.

NOTES:

1. Roof curb must be set up for unit being installed.
2. Seal strip must be applied, as required, to unit being installed.
3. Roof curb is made of 16-gauge steel.
4. Attach ductwork to curb (flanges of duct rest on curb).
5. Insulated panels: 1-in. (25.4 mm) thick fiberglass 1 lb. density.

Selection Procedure (with example)

1. Determine cooling and heating requirements at design conditions:

Given:

Required Cooling Capacity (TC) 34,000Btuh
Sensible Heat Capacity (SHC) . . . . . 25,000 Btuh
Required Heating Capacity. . . . . 60,000 Btuh
Condenser Entering Air Temperature . . . . . 95°F (35°C)
Indoor-Air Temperature . . . . . .80°F (26°C)edb 67°F (19°C)ewb
Evaporator Air Quantity . . . . . 1200 CFM
External Static Pressure . . . . . 0.100 IN. W.C.
Electrical Characteristics 208-1-60

2. Select unit based on required cooling capacity.

Enter Net Cooling Capacities table at condenser entering temperature of 95°F (35°C). Unit 036 at 1200 cfm and 67°F (19°C) ewb (entering wet bulb) will provide a total capacity of 34,800 Btuh and a SHC of 26,310 Btuh. Calculate SHC correction, if required, using Note 4 under Cooling Capacities tables.

3. Select heating capacity of unit to provide design condition requirement.

In the Heating Capacities and Efficiencies table, note that the unit 036090 (208/230 VAC) will provide 74,000 Btuh with an input of 90,000 Btuh in high stage and will provide 47,000 Btuh of heating in low stage.

4. Determine fan speed and power requirements at design conditions.

Before entering the air delivery tables, calculate the total static pressure required. From the given example, the Wet Coil Pressure Drop Table, and the Filter Pressure Drop Table:

External Static Pressure	0.100 IN. W.C
Filter	0.06 IN. W.C
Wet Coil Pressure Drop	0.06 IN. W.C
Total Static Pressure	0.22 IN. W.C

Enter the table for Dry Coil Air Delivery—Horizontal and Downflow Discharge. At .22 IN. W.C. ESP, the closest speed to 1200 CFM is Speed 6, which delivers 1246 CFM at .20 in ESP.

5. Select unit that corresponds to power source available.

The Electrical Data Table shows that the unit is designed to operate at 208-1-60.

Manufacturer reserves the right to change, at any time, specifications and designs without notice and without obligations.

Performance Data

024 Low Cool

EVAPORATOR AIR		CONDENSER ENTERING AIR TEMPERATURES deg F																	
		75 (23.9)			85 (29.4)			95 (35)			105 (40.6)			115 (46.1)			125 (51.7)		
CFM	EWB	Capacity MBtuh		Total Syst KW	Capacity MBtuh		Total Syst KW	Capacity MBtuh		Total Syst KW	Capacity MBtuh		Total Syst KW	Capacity MBtuh		Total Syst KW	Capacity MBtuh		Total Syst KW
		Total	Sens		Total	Sens		Total	Sens		Total	Sens		Total	Sens		Total	Sens	
525	57 (13.8)	16.66	16.66	0.95	15.25	15.25	1.18	13.98	13.98	1.36	12.67	12.67	1.48	11.26	11.26	1.67	10.00	10.00	1.88
	62 (16.6)	17.31	16.52	0.95	15.67	15.39	1.18	14.38	14.38	1.36	13.02	13.02	1.48	11.57	11.57	1.67	10.27	10.27	1.88
	63* (17.2)	17.65	13.33	0.95	15.98	12.44	1.18	14.52	10.79	1.36	13.00	9.78	1.48	11.43	8.25	1.67	9.94	7.24	1.88
	67 (19.4)	18.98	13.89	0.96	17.18	12.96	1.19	15.60	11.24	1.37	13.98	10.18	1.48	12.29	8.60	1.67	10.68	7.54	1.88
	72 (22.2)	20.69	11.11	0.97	18.73	10.24	1.21	17.05	8.85	1.39	15.24	7.94	1.49	13.39	6.62	1.69	11.65	5.65	1.90
600	57 (13.8)	17.47	17.47	0.98	15.99	15.99	1.21	14.66	13.72	1.38	13.29	11.96	1.50	11.81	9.73	1.70	10.48	8.07	1.91
	62 (16.6)	17.66	17.17	0.98	15.99	15.99	1.21	14.67	13.72	1.38	13.29	11.96	1.50	11.81	9.73	1.70	10.48	8.07	1.91
	63* (17.2)	17.85	13.85	0.98	16.16	12.93	1.21	14.69	11.21	1.38	13.15	10.16	1.50	11.56	8.57	1.70	10.05	7.52	1.91
	67 (19.4)	19.20	14.43	0.99	17.38	13.47	1.22	15.78	11.68	1.40	14.14	10.58	1.50	12.43	8.93	1.70	10.81	7.83	1.91
	72 (22.2)	20.93	11.54	1.00	18.94	10.64	1.23	17.24	9.19	1.41	15.41	8.25	1.52	13.55	6.88	1.71	11.78	5.87	1.92
675	57 (13.8)	18.08	18.08	1.00	16.55	16.55	1.23	15.17	14.67	1.41	13.75	12.78	1.53	12.22	10.40	1.72	10.85	8.62	1.93
	62 (16.6)	18.28	18.28	1.00	16.55	16.55	1.23	15.19	14.67	1.41	13.75	12.78	1.53	12.22	10.40	1.72	10.85	8.62	1.93
	63* (17.2)	18.48	14.80	1.00	16.73	13.82	1.23	15.20	11.98	1.41	13.61	10.85	1.53	11.96	9.16	1.72	10.40	8.04	1.93
	67 (19.4)	19.87	15.42	1.01	17.99	14.39	1.24	16.33	12.48	1.42	14.63	11.31	1.53	12.86	9.55	1.72	11.18	8.37	1.93
	72 (22.2)	21.66	12.34	1.02	19.61	11.37	1.25	17.85	9.82	1.43	15.95	8.82	1.54	14.02	7.35	1.74	12.19	6.28	1.95

See Legend and Notes on page 16.

024 High Cool

EVAPORATOR AIR		CONDENSER ENTERING AIR TEMPERATURES °F (°C)																	
		75 (23.9)			85 (29.4)			95 (35)			105 (40.6)			115 (46.1)			125 (51.7)		
CFM	EWB °F (°C)	Capacity MBtuh		Total Sys KW	Capacity MBtuh		Total Sys KW	Capacity MBtuh		Total Sys KW	Capacity MBtuh		Total Sys KW	Capacity MBtuh		Total Sys KW	Capacity MBtuh		Total Sys KW
		Total	Sens		Total	Sens		Total	Sens		Total	Sens		Total	Sens		Total	Sens	
700	57 (13.8)	21.77	21.77	1.54	21.04	21.04	1.69	19.67	19.67	1.89	18.91	18.91	2.12	17.90	17.90	2.33	16.84	16.84	2.60
	62 (16.6)	22.62	21.24	1.54	21.62	20.83	1.69	20.23	19.24	1.89	19.43	18.32	2.12	18.39	16.78	2.33	17.30	15.35	2.60
	63* (17.2)	23.07	17.13	1.54	22.05	16.66	1.69	20.44	15.72	1.89	19.39	15.56	2.12	18.17	14.78	2.33	16.74	14.30	2.60
	67 (19.4)	24.80	17.85	1.56	23.71	17.36	1.71	21.95	16.37	1.91	20.85	16.21	2.12	19.54	15.39	2.33	18.00	14.90	2.60
	72 (22.2)	27.04	14.28	1.57	25.84	13.71	1.73	23.99	12.89	1.92	22.73	12.64	2.14	21.29	11.85	2.35	19.62	11.32	2.63
800	57 (13.8)	22.83	22.83	1.57	22.06	21.82	1.73	20.62	19.99	1.92	19.82	19.03	2.15	18.77	17.43	2.36	17.66	15.95	2.63
	62 (16.6)	23.08	22.07	1.57	22.06	21.64	1.73	20.65	19.99	1.92	19.82	19.03	2.15	18.77	17.43	2.36	17.66	15.95	2.63
	63* (17.2)	23.33	17.80	1.57	22.30	17.31	1.73	20.67	16.33	1.92	19.61	16.17	2.15	18.37	15.35	2.36	16.93	14.86	2.63
	67 (19.4)	25.09	18.54	1.59	23.98	18.03	1.74	22.20	17.01	1.94	21.09	16.84	2.15	19.76	15.99	2.36	18.20	15.48	2.63
	72 (22.2)	27.34	14.83	1.60	26.13	14.25	1.76	24.26	13.39	1.96	22.99	13.14	2.17	21.54	12.31	2.39	19.84	11.77	2.66
900	57 (13.8)	23.63	23.63	1.60	22.83	22.83	1.76	21.35	21.35	1.95	20.52	20.34	2.18	19.43	18.63	2.40	18.28	17.04	2.67
	62 (16.6)	23.89	23.83	1.60	22.83	22.83	1.76	21.37	21.36	1.95	20.52	20.34	2.18	19.43	18.63	2.40	18.28	17.04	2.67
	63* (17.2)	24.15	19.03	1.60	23.08	18.50	1.76	21.39	17.45	1.95	20.30	17.28	2.18	19.02	16.41	2.40	17.52	15.88	2.67
	67 (19.4)	25.96	19.82	1.62	24.82	19.27	1.78	22.98	18.18	1.97	21.83	18.00	2.18	20.45	17.09	2.40	18.84	16.55	2.67
	72 (22.2)	28.30	15.85	1.64	27.05	15.23	1.79	25.11	14.31	1.99	23.79	14.04	2.20	22.29	13.16	2.42	20.54	12.57	2.69

See Legend and Notes on page 16.

Manufacturer reserves the right to change, at any time, specifications and designs without notice and without obligations.

Performance Data (cont)

036 Low Cool

EVAPORATOR AIR		CONDENSER ENTERING AIR TEMPERATURES °F (°C)																	
		75 (23.9)			85 (29.4)			95 (35)			105 (40.6)			115 (46.1)			125 (51.7)		
CFM	EWB	Capacity MBtuh		Total Syst KW	Capacity MBtuh		Total Syst KW	Capacity MBtuh		Total Syst KW	Capacity MBtuh		Total Syst KW	Capacity MBtuh		Total Syst KW	Capacity MBtuh		Total Syst KW
		Total	Sens		Total	Sens		Total	Sens		Total	Sens		Total	Sens		Total	Sens	
775	57 (13.8)	25.49	25.49	1.44	23.33	23.33	1.79	21.39	21.39	2.06	19.39	19.39	2.24	17.23	17.23	2.53	15.30	15.30	2.85
	62 (16.6)	26.48	24.78	1.44	23.97	23.33	1.79	22.00	22.00	2.06	19.93	19.93	2.24	17.70	17.70	2.53	15.72	15.72	2.85
	63* (17.2)	27.01	19.99	1.44	24.45	18.66	1.79	22.22	16.19	2.06	19.89	14.66	2.24	17.48	12.38	2.53	15.20	10.85	2.85
	67 (19.4)	29.04	20.83	1.46	26.29	19.44	1.81	23.87	16.86	2.08	21.39	15.27	2.24	18.80	12.89	2.53	16.35	11.31	2.85
	72 (22.2)	31.66	16.66	1.47	28.66	15.36	1.83	26.09	13.27	2.10	23.31	11.91	2.26	20.49	9.93	2.56	17.82	8.48	2.88
900	57 (13.8)	27.16	27.16	1.48	24.86	24.83	1.83	22.79	20.91	2.10	20.66	18.22	2.28	18.35	14.84	2.57	16.30	12.29	2.89
	62 (16.6)	27.46	26.16	1.48	24.86	24.63	1.83	22.81	20.91	2.10	20.66	18.22	2.28	18.35	14.84	2.57	16.30	12.29	2.89
	63* (17.2)	27.76	21.11	1.48	25.13	19.70	1.83	22.84	17.09	2.10	20.44	15.48	2.28	17.97	13.07	2.57	15.62	11.46	2.89
	67 (19.4)	29.85	21.99	1.50	27.02	20.52	1.85	24.53	17.80	2.12	21.98	16.12	2.28	19.32	13.61	2.57	16.80	11.94	2.89
	72 (22.2)	32.53	17.59	1.51	29.45	16.21	1.87	26.81	14.01	2.14	23.96	12.58	2.30	21.06	10.48	2.60	18.31	8.95	2.92
1025	57 (13.8)	28.46	28.46	1.52	26.05	26.05	1.87	23.88	22.63	2.14	21.65	19.71	2.32	19.23	16.05	2.61	17.07	13.30	2.93
	62 (16.6)	28.77	28.61	1.52	26.05	26.05	1.87	23.90	22.63	2.14	21.65	19.71	2.32	19.23	16.05	2.61	17.07	13.30	2.93
	63* (17.2)	29.08	22.84	1.52	26.33	21.31	1.87	23.93	18.49	2.14	21.42	16.75	2.32	18.83	14.14	2.61	16.37	12.40	2.93
	67 (19.4)	31.27	23.79	1.54	28.31	22.20	1.89	25.70	19.26	2.16	23.03	17.45	2.32	20.24	14.73	2.61	17.60	12.91	2.93
	72 (22.2)	34.09	19.03	1.55	30.86	17.54	1.91	28.09	15.16	2.18	25.10	13.61	2.34	22.06	11.34	2.64	19.19	9.69	2.96

See Legend and Notes on page 16.

036 High Cool

EVAPORATOR AIR		CONDENSER ENTERING AIR TEMPERATURES °F (°C)																	
		75 (23.9)			85 (29.4)			95 (35)			105 (40.6)			115 (46.1)			125 (51.7)		
CFM	EWB °F (°C)	Capacity MBtuh		Total Sys KW	Capacity MBtuh		Total Sys KW	Capacity MBtuh		Total Sys KW	Capacity MBtuh		Total Sys KW	Capacity MBtuh		Total Sys KW	Capacity MBtuh		Total Sys KW
		Total	Sens		Total	Sens		Total	Sens		Total	Sens		Total	Sens		Total	Sens	
1050	57 (13.8)	33.53	33.53	2.37	32.37	32.37	2.61	30.83	30.83	2.91	29.02	29.02	3.26	27.43	27.43	3.59	25.76	25.76	4.01
	62 (16.6)	34.83	32.24	2.37	33.26	31.45	2.61	31.72	29.75	2.91	29.81	27.47	3.26	28.19	25.39	3.59	26.46	23.21	4.01
	63* (17.2)	35.52	26.01	2.37	33.92	25.16	2.61	32.03	24.31	2.91	29.76	23.34	3.26	27.84	22.37	3.59	25.60	21.64	4.01
	67 (19.4)	38.19	27.10	2.40	36.47	26.21	2.64	34.41	25.32	2.94	32.00	24.31	3.26	29.94	23.30	3.59	27.53	22.54	4.01
	72 (22.2)	41.63	21.68	2.42	39.76	20.71	2.66	37.61	19.93	2.97	34.88	18.96	3.30	32.63	17.94	3.63	30.00	17.13	4.05
1200	57 (13.8)	35.15	34.91	2.42	33.94	32.95	2.66	32.33	30.91	2.95	30.42	28.54	3.31	28.76	26.38	3.64	27.00	24.12	4.06
	62 (16.6)	35.54	33.50	2.42	33.94	32.68	2.66	32.36	30.91	2.95	30.42	28.54	3.31	28.76	26.38	3.64	27.00	24.12	4.06
	63* (17.2)	35.92	27.03	2.42	34.31	26.14	2.66	32.40	25.26	2.95	30.10	24.25	3.31	28.16	23.24	3.64	25.89	22.48	4.06
	67 (19.4)	38.63	28.15	2.45	36.89	27.23	2.69	34.80	26.31	2.98	32.36	25.26	3.31	30.28	24.21	3.64	27.84	23.42	4.06
	72 (22.2)	42.10	22.52	2.47	40.21	21.51	2.71	38.04	20.71	3.01	35.28	19.70	3.35	33.00	18.64	3.68	30.35	17.80	4.10
1350	57 (13.8)	36.38	36.38	2.47	35.12	35.12	2.71	33.46	33.04	3.00	31.49	30.50	3.36	29.77	28.20	3.69	27.95	25.78	4.11
	62 (16.6)	36.78	36.18	2.47	35.12	34.92	2.71	33.50	33.04	3.00	31.49	30.50	3.36	29.77	28.20	3.69	27.95	25.78	4.11
	63* (17.2)	37.18	28.88	2.47	35.51	27.94	2.71	33.53	26.99	3.00	31.15	25.91	3.36	29.14	24.83	3.69	26.80	24.02	4.11
	67 (19.4)	39.98	30.09	2.49	38.18	29.10	2.73	36.02	28.12	3.03	33.50	26.99	3.36	31.34	25.87	3.69	28.81	25.03	4.11
	72 (22.2)	43.58	24.07	2.52	41.62	22.99	2.76	39.37	22.13	3.06	36.51	21.06	3.39	34.16	19.92	3.72	31.41	19.02	4.15

See Legend and Notes on page 16.

Manufacturer reserves the right to change, at any time, specifications and designs without notice and without obligations.

Performance Data (cont)

048 Low Cool

EVAPORATOR AIR		CONDENSER ENTERING AIR TEMPERATURES °F (°C)																	
		75 (23.9)			85 (29.4)			95 (35)			105 (40.6)			115 (46.1)			125 (51.7)		
CFM	EWB	Capacity MBtuh		Total Syst KW	Capacity MBtuh		Total Syst KW	Capacity MBtuh		Total Syst KW	Capacity MBtuh		Total Syst KW	Capacity MBtuh		Total V KW	Capacity MBtuh		Total Syst KW
		Total	Sens		Total	Sens		Total	Sens		Total	Sens		Total	Sens		Total	Sens	
1050	57	35.30	35.30	1.93	32.30	32.30	2.40	29.61	29.61	2.76	26.85	26.85	3.00	23.85	23.85	3.39	21.18	21.18	3.82
	62	36.67	34.61	1.93	33.19	32.58	2.40	30.46	30.46	2.76	27.59	27.59	3.00	24.51	24.51	3.39	21.76	21.76	3.82
	63	37.40	27.92	1.93	33.85	26.06	2.40	30.76	22.60	2.76	27.54	20.48	3.00	24.21	17.29	3.39	21.05	15.16	3.82
	67	40.21	29.09	1.95	36.40	27.15	2.43	33.04	23.55	2.79	29.61	21.33	3.00	26.03	18.01	3.39	22.63	15.79	3.82
	72	43.83	23.27	1.97	39.68	21.45	2.45	36.12	18.53	2.82	32.28	16.64	3.03	28.37	13.86	3.43	24.67	11.84	3.86
1200	57	37.01	37.01	1.98	33.87	33.87	2.45	31.05	28.74	2.81	28.15	25.04	3.05	25.01	20.39	3.44	22.20	16.90	3.87
	62	37.41	35.96	1.98	33.87	33.85	2.45	31.08	28.74	2.81	28.15	25.04	3.05	25.01	20.39	3.44	22.20	16.90	3.87
	63	37.82	29.01	1.98	34.24	27.08	2.45	31.11	23.48	2.81	27.85	21.27	3.05	24.48	17.96	3.44	21.29	15.75	3.87
	67	40.67	30.22	2.00	36.81	28.20	2.48	33.42	24.46	2.84	29.95	22.16	3.05	26.32	18.71	3.44	22.89	16.40	3.87
	72	44.33	24.18	2.02	40.13	22.28	2.50	36.53	19.25	2.86	32.64	17.29	3.08	28.69	14.40	3.48	24.95	12.30	3.91
1350	57	38.30	38.30	2.03	35.06	35.06	2.50	32.13	30.72	2.85	29.14	26.76	3.10	25.88	21.79	3.49	22.98	18.06	3.92
	62	38.72	38.72	2.03	35.06	35.06	2.50	32.17	30.72	2.85	29.14	26.76	3.10	25.88	21.79	3.49	22.98	18.06	3.92
	63	39.14	31.00	2.03	35.44	28.94	2.50	32.20	25.10	2.85	28.83	22.74	3.10	25.34	19.19	3.49	22.03	16.83	3.92
	67	42.09	32.30	2.05	38.10	30.14	2.52	34.59	26.14	2.88	31.00	23.68	3.10	27.24	19.99	3.49	23.69	17.53	3.92
	72	45.88	25.84	2.07	41.53	23.81	2.55	37.81	20.58	2.91	33.79	18.47	3.13	29.70	15.39	3.52	25.82	13.15	3.96

See Legend and Notes on page 16.

048 High Cool

EVAPORATOR AIR		CONDENSER ENTERING AIR TEMPERATURES °F (°C)																	
		75 (23.9)			85 (29.4)			95 (35)			105 (40.6)			115 (46.1)			125 (51.7)		
CFM	EWB °F (°C)	Capacity MBtuh		Total Sys KW	Capacity MBtuh		Total Sys KW	Capacity MBtuh		Total Sys KW	Capacity MBtuh		Total Sys KW	Capacity MBtuh		Total Sys KW	Capacity MBtuh		Total Sys KW
		Total	Sens		Total	Sens		Total	Sens		Total	Sens		Total	Sens		Total	Sens	
1400	57 (13.8)	44.80	44.80	3.22	43.25	43.25	3.54	41.20	41.20	3.95	38.77	38.77	4.43	36.65	36.65	4.88	34.42	34.42	5.44
	62 (16.6)	46.54	44.19	3.22	44.44	43.11	3.54	42.38	40.78	3.95	39.84	37.65	4.43	37.66	34.80	4.88	35.36	31.82	5.44
	63* (17.2)	47.46	35.65	3.22	45.32	34.49	3.54	42.80	33.32	3.95	39.77	31.99	4.43	37.20	30.65	4.88	34.21	29.65	5.44
	67 (19.4)	51.03	37.14	3.26	48.74	35.92	3.58	45.98	34.71	3.99	42.76	33.32	4.43	40.00	31.93	4.88	36.78	30.89	5.44
	72 (22.2)	55.63	29.71	3.29	53.12	28.38	3.62	50.25	27.31	4.03	46.61	25.99	4.48	43.60	24.59	4.93	40.09	23.48	5.50
1600	57 (13.8)	46.97	46.97	3.29	45.35	45.16	3.61	43.20	42.37	4.01	40.65	39.12	4.50	38.43	36.16	4.94	36.08	33.06	5.51
	62 (16.6)	47.49	45.92	3.29	45.35	44.79	3.61	43.25	42.37	4.01	40.65	39.12	4.50	38.43	36.16	4.94	36.08	33.06	5.51
	63* (17.2)	48.00	37.04	3.29	45.84	35.83	3.61	43.29	34.62	4.01	40.22	33.23	4.50	37.62	31.85	4.94	34.60	30.81	5.51
	67 (19.4)	51.62	38.58	3.32	49.29	37.32	3.65	46.50	36.06	4.05	43.25	34.62	4.50	40.46	33.18	4.94	37.20	32.09	5.51
	72 (22.2)	56.26	30.87	3.35	53.73	29.48	3.68	50.82	28.38	4.09	47.14	27.00	4.54	44.10	25.54	4.99	40.55	24.39	5.56
1800	57 (13.8)	48.61	48.61	3.35	46.93	46.93	3.67	44.71	44.71	4.07	42.07	41.81	4.56	39.78	38.65	5.01	37.35	35.33	5.57
	62 (16.6)	49.15	49.15	3.35	46.93	46.93	3.67	44.76	44.76	4.07	42.07	41.81	4.56	39.78	38.65	5.01	37.35	35.33	5.57
	63* (17.2)	49.68	39.59	3.35	47.44	38.29	3.67	44.81	37.00	4.07	41.63	35.52	4.56	38.94	34.04	5.01	35.81	32.93	5.57
	67 (19.4)	53.42	41.24	3.39	51.02	39.89	3.71	48.13	38.54	4.11	44.76	37.00	4.56	41.87	35.46	5.01	38.50	34.30	5.57
	72 (22.2)	58.23	32.99	3.42	55.61	31.51	3.75	52.60	30.33	4.15	48.79	28.86	4.60	45.64	27.30	5.05	41.97	26.07	5.63

See Legend and Notes on page 16.

Manufacturer reserves the right to change, at any time, specifications and designs without notice and without obligations.

Performance Data (cont)

060 Low Cool

EVAPORATOR AIR		CONDENSER ENTERING AIR TEMPERATURES deg F																	
		75 (23.9)			85 (29.4)			95 (35)			105 (40.6)			115 (46.1)			125 (51.7)		
CFM	EWB	Capacity MBtuh		Total Syst KW	Capacity MBtuh		Total Syst KW	Capacity MBtuh		Total Syst KW	Capacity MBtuh		Total Syst KW	Capacity MBtuh		Total Syst KW	Capacity MBtuh		Total Syst KW
		Total	Sens		Total	Sens		Total	Sens		Total	Sens		Total	Sens		Total	Sens	
1050	57 (13.8)	40.34	40.34	2.28	36.92	36.92	2.83	33.84	33.84	3.25	30.68	30.68	3.53	27.26	26.92	3.99	24.20	23.90	4.49
	62 (16.6)	41.90	37.31	2.28	37.93	35.11	2.83	34.81	34.81	3.25	31.53	30.70	3.53	28.01	26.92	3.99	24.87	23.90	4.49
	63* (17.2)	42.74	30.10	2.28	38.69	28.09	2.83	35.16	24.36	3.25	31.47	22.07	3.53	27.66	18.63	3.99	24.06	16.34	4.49
	67 (19.4)	45.95	31.35	2.30	41.60	29.26	2.86	37.76	25.38	3.28	33.84	22.99	3.53	29.75	19.41	3.99	25.87	17.02	4.49
	72 (22.2)	50.09	25.08	2.33	45.34	23.12	2.89	41.28	19.97	3.31	36.89	17.93	3.56	32.42	14.94	4.03	28.19	12.76	4.54
1200	57 (13.8)	42.29	40.39	2.33	38.71	36.78	2.87	35.48	30.98	3.29	32.17	26.99	3.58	28.58	21.98	4.04	25.38	18.21	4.54
	62 (16.6)	42.76	38.76	2.33	38.71	36.48	2.87	35.52	30.98	3.29	32.17	26.99	3.58	28.58	21.98	4.04	25.38	18.21	4.54
	63* (17.2)	43.22	31.27	2.33	39.13	29.18	2.87	35.56	25.31	3.29	31.83	22.93	3.58	27.98	19.36	4.04	24.33	16.97	4.54
	67 (19.4)	46.48	32.57	2.35	42.07	30.40	2.90	38.19	26.37	3.33	34.23	23.89	3.58	30.08	20.16	4.04	26.16	17.68	4.54
	72 (22.2)	50.66	26.06	2.37	45.86	24.02	2.93	41.75	20.75	3.36	37.31	18.63	3.61	32.79	15.53	4.08	28.51	13.26	4.59
1350	57 (13.8)	43.77	43.16	2.37	40.06	39.31	2.92	36.72	33.11	3.34	33.30	28.85	3.63	29.58	23.49	4.09	26.26	19.46	4.59
	62 (16.6)	44.26	41.86	2.37	40.06	38.99	2.92	36.76	33.11	3.34	33.30	28.85	3.63	29.58	23.49	4.09	26.26	19.46	4.59
	63* (17.2)	44.74	33.42	2.37	40.50	31.19	2.92	36.80	27.05	3.34	32.94	24.51	3.63	28.96	20.69	4.09	25.18	18.14	4.59
	67 (19.4)	48.10	34.81	2.40	43.55	32.49	2.95	39.53	28.18	3.37	35.42	25.53	3.63	31.14	21.55	4.09	27.08	18.90	4.59
	72 (22.2)	52.43	27.85	2.42	47.47	25.67	2.98	43.21	22.18	3.41	38.61	19.91	3.66	33.94	16.59	4.13	29.51	14.17	4.63

See Legend and Notes on page 16.

060 High Cool

EVAPORATOR AIR		CONDENSER ENTERING AIR TEMPERATURES °F (°C)																	
		75 (23.9)			85 (29.4)			95 (35)			105 (40.6)			115 (46.1)			125 (51.7)		
CFM	EWB °F (°C)	Capacity MBtuh		Total Sys KW	Capacity MBtuh		Total Sys KW	Capacity MBtuh		Total Sys KW	Capacity MBtuh		Total Sys KW	Capacity MBtuh		Total Sys KW	Capacity MBtuh		Total Sys KW
		Total	Sens		Total	Sens		Total	Sens		Total	Sens		Total	Sens		Total	Sens	
1600	57 (13.8)	51.83	51.83	3.84	50.94	50.94	4.22	48.99	48.99	4.69	47.09	47.09	5.26	44.59	43.26	5.79	40.92	39.47	6.46
	62 (16.6)	53.92	51.75	3.84	52.43	49.58	4.22	50.47	46.90	4.69	48.46	42.40	5.26	45.89	37.85	5.79	42.12	34.54	6.46
	63* (17.2)	55.03	41.75	3.84	53.50	39.66	4.22	51.00	38.32	4.69	48.40	36.02	5.26	45.34	33.34	5.79	40.76	32.19	6.46
	67 (19.4)	59.17	43.49	3.88	57.52	41.31	4.26	54.78	39.92	4.74	52.04	37.52	5.26	48.76	34.73	5.79	43.83	33.53	6.46
	72 (22.2)	64.49	34.79	3.91	61.53	32.64	4.30	56.35	31.41	4.78	56.73	29.27	5.32	53.15	26.74	5.85	47.77	25.48	6.52
1750	57 (13.8)	55.04	55.04	3.88	54.10	52.07	4.26	52.02	48.86	4.74	50.01	44.17	5.31	47.35	39.43	5.84	43.46	35.98	6.51
	62 (16.6)	55.64	53.91	3.88	54.10	51.64	4.26	52.08	48.86	4.74	50.01	44.17	5.31	47.35	39.43	5.84	43.46	35.98	6.51
	63* (17.2)	56.25	43.49	3.88	54.68	41.31	4.26	52.14	39.92	4.74	49.48	37.52	5.31	46.35	34.73	5.84	41.66	33.53	6.51
	67 (19.4)	60.48	45.30	3.92	58.80	43.04	4.31	56.00	41.58	4.79	53.20	39.09	5.31	49.84	36.17	5.84	44.80	34.93	6.51
	72 (22.2)	65.92	36.24	3.96	64.09	34.00	4.35	61.21	32.72	4.83	57.99	30.49	5.36	54.33	27.85	5.90	48.83	26.54	6.57
2000	57 (13.8)	56.61	56.61	3.96	55.64	55.64	4.34	53.51	53.04	4.82	51.44	47.95	5.39	48.70	42.81	5.92	44.70	39.06	6.59
	62 (16.6)	57.23	57.23	3.96	55.64	55.64	4.34	53.57	53.04	4.82	51.44	47.95	5.39	48.70	42.81	5.92	44.70	39.06	6.59
	63* (17.2)	57.85	47.22	3.96	56.25	44.86	4.34	53.63	43.34	4.82	50.89	40.74	5.39	47.68	37.70	5.92	42.85	36.40	6.59
	67 (19.4)	62.21	49.18	4.00	60.48	46.72	4.39	57.60	45.14	4.87	54.72	42.44	5.39	51.26	39.28	5.92	46.08	37.92	6.59
	72 (22.2)	67.81	39.35	4.04	65.92	36.91	4.43	62.96	35.53	4.91	59.64	33.10	5.44	55.88	30.24	5.98	50.23	28.82	6.65

See Legend and Notes on page 16.

Manufacturer reserves the right to change, at any time, specifications and designs without notice and without obligations.

Performance Data (Cont)

*At 75°F (24°C) entering dry bulb-Tennessee Valley Authority (TVA) rating conditions; all others at 80°F (27°C) dry bulb.

LEGEND
BF— Bypass Factor
edb— Entering Dry-Bulb
Ewb— Entering Wet-Bulb
kW — Total Unit Power Input
SHC— Sensible Heat Capacity (1000 Btuh)
TC — Total Capacity (1000 Btuh) (net)
rh—Relative Humidity

COOLING NOTES:
1. Ratings are net; they account for the effects of the evaporator-fan motor power and heat.
2. Direct interpolation is permissible. Do not extrapolate.
3. The following formulas may be used:

$$^{t}ldb = {}^{t}edb - \frac{\text{Sensible capacity (Btuh)}}{1.10 \times \text{CFM}}$$

$^{t}lwb =$ Wet-bulb temperature corresponding to enthalpy air leaving evaporator coil (^{h}lwb)

$$^{h}lwb = {}^{h}ewb - \frac{\text{total capacity (Btuh)}}{(4.5 \times \text{CFM})}$$

Where: ^{h}ewb = Enthalpy of air entering evaporator coil

4. The SHC is based on 80° F (26.6°C) edb temperature of air entering evaporator coil. Below 80°F (26.6°C) edb, subtract (corr factor x cfm) from SHC. Above 80° F (26.6°C) edb, add (corr factor x cfm) to SHC.
Correction Factor = 1.10 x (1 + BF) x (edb - 80).
5. Integrated capacity is maximum (instantaneous) capacity less the effect of frost on the outdoor coil and the heat required to defrost it.

Manufacturer reserves the right to change, at any time, specifications and designs without notice and without obligations.

Gas Adjustment

Natural Gas Orifice Sizes and Manifold Pressure

Nameplate Input, High Stage (Btu/hr)		ALTITUDE OF INSTALLATION (FT. [m] ABOVE SEA LEVEL) U.S.A.*				
		0 to 2000 [0 to 610]	2001 to 3000* [610 to 914]	3001 to 4000 [915 to 1219]	4001 to 5000 [1220 to 1524]	5001 to 6000 [1524 to 1829]
40000	Orifice No. (Qty)	44 (2)	45 (2)†	48 (2)†	48 (2)†	48 (2)†
	Manifold Press. High / Low (in. W.C.)	3.2 /1.4	3.2 /1.4	3.8 /1.6	3.5 /1.5	3.2 /1.4
60000	Orifice No. (Qty)	44 (3)	45 (3)†	48 (3)†	48 (3)†	48 (3)†
	Manifold Press. High / Low (in. W.C.)	3.2 /1.4	3.2 /1.4	3.8 /1.6	3.5 /1.5	3.2 /1.4
90000	Orifice No. (Qty)	38 (3)	41 (3)†	41 (3)†	42 (3)†	42 (3)†
	Manifold Press. High / Low (in. W.C.)	3.6 /1.6	3.8 /1.6	3.4 /1.5	3.4 /1.5	3.2 /1.4
115000	Orifice No. (Qty)	33 (3)	36 (3)†	36 (3)†	36 (3)†	38 (3)†
	Manifold Press. High / Low (in. W.C.)	3.8 /1.7	3.8 /1.7	3.6 /1.6	3.3 /1.4	3.6 /1.5
127000	Orifice No. (Qty)	31 (3)	31 (3)	33 (3)†	33 (3)†	34 (3)†
	Manifold Press. High / Low (in. W.C.)	3.7 /1.7	3.2 /1.4	3.5 /1.6	3.2 /1.4	3.2 /1.4

*In the U.S.A., the input rating for altitudes above 2000 ft (610m) must be reduced by 4% for each 1000 ft (305 m) above sea level.
In Canada, the input rating for altitudes from 2001 to 4500 ft (611 to 1372 m) above sea level must be derated by 10% by an authorized gas conversion station or dealer.
For Canadian Installations from 2000 to 4500 ft, use U.S.A. column 2001 to 3000 ft (610 to 914 m).
† Orifices available through your distributor.
NOTE: Orifice sizes and manifold pressure settings are based on natural gas with a heating value of 1025 Btu/ft^3 and a specific gravity of .6.
NOTE: 460 VAC units are single stage only.

Propane Gas Orifice Sizes and Manifold Pressure

Nameplate Input, High Stage (Btu/hr)		ALTITUDE OF INSTALLATION (FT. ABOVE SEA LEVEL) U.S.A.*†				
		0 to 2000 [0 to 610]	2001 to 3000* [610 to 914]	3001 to 4000 [915 to 1219]	4001 to 5000 [1220 to 1524]	5001 to 6000 [1524 to 1829]
40000	Orifice No. (Qty)	55 (2)	56 (2)	56 (2)	56 (2)	56 (2)
	Manifold Press. High / Low (in. W.C.)	10.0/5.0	11.0/6.0	11.0/5.5	11.0/5.0	10.7/4.8
60000	Orifice No. (Qty)	55 (3)	56 (3)	56 (3)	56 (3)	56 (3)
	Manifold Press. High / Low (in. W.C.)	10.0/5.0	11.0/6.0	11.0/5.5	11.0/5.0	10.7/4.8
90000	Orifice No. (Qty)	53 (3)	54 (3)	54 (3)	54 (3)	54 (3)
	Manifold Press. High / Low (in. W.C.)	10.0/5.4	11.0/6.4	11.0/5.9	11.0/5.4	11.0/5.0
115000	Orifice No. (Qty)	51 (3)	52 (3)	52 (3)	53 (3)	53 (3)
	Manifold Press. High / Low (in. W.C.)	10.0/5.4	11.0/5.0	10.6/4.8	11.0/6.1	11.0/5.5
127000 (1-Phase)	Orifice No. (Qty)	49 (3)	50 (3)	51 (3)	52 (3)	52 (3)
	Manifold Press. High / Low (in. W.C.)	10.0/5.4	11.0/4.8	11.0/4.9	11.0/5.2	11.0/5.0

*In the U.S.A., the input rating for altitudes above 2000 ft (610m) must be reduced by 4% for each 1000 ft (305 m) above sea level.
In Canada, the input rating for altitudes from 2001 to 4500 ft (611 to 1372 m) above sea level must be derated by 10% by an authorized gas conversion station or dealer.
For Canadian Installations from 2000 to 4500 ft, use U.S.A. column 2001 to 3000 ft (610 to 914 m).
† Use Kit No. CPLPCONV013C00 (0-2000 ft [0-610 m] above sea level. Use Kit No. CPLPCONV014C00 (2001-6000 ft [611-1829 m] above sea level.
NOTE: 460 VAC units are single stage only.

High Altitude Compensation: Natural Gas

Nameplate Input, High Stage (Btu/hr)	Rated Heating Input (Btu/hr), Natural Gas at Installation Altitude Above Sea Level, U.S.A.*									
	0 to 2000 ft 0 to 610 m		2001 to 3000 ft* 610 to 914 m		3001 to 4000 ft 915 to 1219 m		4001 to 5000 ft 1220 to 1524 m		5001 to 6000 ft 1524 to 1829 m	
	High Stage	Low Stage	High Stage	Low Stage	High Stage	Low Stage	High Stage	Low Stage	High Stage	Low Stage
40000	40000	26000	36000	23400	34400	22300	32800	21300	31200	20300
60000	60000	39000	54000	35100	51600	33500	49200	32000	46800	30400
90000	90000	58500	81000	52700	77400	50300	73800	48000	70200	45600
115000	115000	75000	103500	67500	98900	64500	94300	61500	89700	58500
127000 (1-Phase)	127000	84500	114300	76100	109200	72700	104100	69300	99100	65900

NOTE: 460 VAC units are single stage only.

High Altitude Compensation: Propane Gas

Nameplate Input, High Stage (Btu/hr)	Rated Heating Input (Btu/hr), LP Gas at Installation Altitude Above Sea Level, U.S.A.*									
	0 to 2000 ft 0 to 610 m		2001 to 3000 ft* 610 to 914 m		3001 to 4000 ft 915 to 1219 m		4001 to 5000 ft 1220 to 1524 m		5001 to 6000 ft 1524 to 1829 m	
	High Stage	Low Stage	High Stage	Low Stage	High Stage	Low Stage	High Stage	Low Stage	High Stage	Low Stage
40000	38000	26000	31700	23400	31700	22300	31700	21300	31200	20300
60000	57000	39000	47500	35100	47500	33500	47500	32000	46800	30400
90000	79000	58500	68900	52700	68900	50300	68600	48000	68600	45600
115000	103000	75000	100400	67500	98900	64500	83000	61500	83000	58500
127000 (1-Phase)	116000	84500	115500	76100	111800	72700	101300	69300	100400	65900

*In the U.S.A., the input rating for altitudes above 2000 ft (610m) must be reduced by 4% for each 1000 ft (305 m) above sea level.
In Canada, the input rating for altitudes from 2001 to 4500 ft (611 to 1372 m) above sea level must be derated by 10% by an authorized gas conversion station or dealer.
For Canadian Installations from 2000 to 4500 ft (610-1372 m), use U.S.A. column 2001 to 3000 ft (611 to 914 m).

NOTE: 460 VAC units are single stage only.

Dry Coil Air Delivery** - Horizontal and Downflow Discharge Sizes 24-60 208/230 VAC - 1, 3 Phase

Unit Size	Heating Rise °F (°C)	Motor Speed	Allowable Functions	Motor Speed Selection		ESP (in. W.C.)	0.1	0.2	0.3	0.4	0.5	0.6	0.7	0.8	0.9	1
24040	25 - 55 (14 - 31)	1	Continuous Fan	SW2-5	SW2-6	CFM	480	460	344	212	NA	NA	NA	NA	NA	NA
				OFF	OFF											
			Dehumidification Low	SW1-7	SW1-8											
				OFF	OFF											
			Low Stage Cooling	SW1-3	SW1-4	BHP	0.06	0.06	0.07	0.07	NA	NA	NA	NA	NA	NA
				OFF	OFF											
			Low Stage Heating*	SW2-3	SW2-4	Gas Heat Rise (°F)	40	42	NA	NA	NA	NA	NA	NA	NA	NA
				OFF	OFF	Gas Heat Rise (°C)	22	23	NA	NA	NA	NA	NA	NA	NA	NA
		2	Continuous Fan*	SW2-5	SW2-6	CFM	712	625	531	440	344	208	NA	NA	NA	NA
				ON	OFF											
			Dehumidification Low	SW1-7	SW1-8											
				ON	OFF											
			Low Stage Cooling	SW1-3	SW1-4	BHP	0.09	0.10	0.10	0.10	0.11	0.11	NA	NA	NA	NA
				ON	OFF											
			Low Stage Heating	SW2-3	SW2-4	Gas Heat Rise (°F)	27	31	36	44	NA	NA	NA	NA	NA	NA
				ON	OFF	Gas Heat Rise (°C)	15	17	20	24	NA	NA	NA	NA	NA	NA
		3	Continuous Fan	SW2-5	SW2-6	CFM	747	663	575	473	370	289	179	NA	NA	NA
				OFF	ON											
			Dehumidification Low	SW1-7	SW1-8											
				OFF	ON											
			Low Stage Cooling	SW1-3	SW1-4	BHP	0.10	0.11	0.11	0.12	0.12	0.13	0.13	NA	NA	NA
				OFF	ON											
			Low Stage Heating	SW2-3	SW2-4	Gas Heat Rise (°F)	26	44	50	NA	NA	NA	NA	NA	NA	NA
				OFF	ON	Gas Heat Rise (°C)	14	24	28	NA	NA	NA	NA	NA	NA	NA
		4	Continuous Fan	SW2-5	SW2-6	CFM	805	721	641	565	471	383	274	146	NA	NA
				ON	ON											
			Dehumidification Low	SW1-7	SW1-8											
				ON	ON											
			Low Stage Cooling*	SW1-3	SW1-4	BHP	0.11	0.12	0.13	0.13	0.13	0.14	0.14	0.15	NA	NA
				ON	ON											
			Low Stage Heating	SW2-3	SW2-4	Gas Heat Rise (°F)	24	27	30	34	41	51	NA	NA	NA	NA
				ON	ON	Gas Heat Rise (°C)	13	15	17	19	23	28	NA	NA	NA	NA

Manufacturer reserves the right to change, at any time, specifications and designs without notice and without obligations.

Dry Coil Air Delivery** - Horizontal and Downflow Discharge Sizes 24-60 208/230 VAC - 1, 3 Phase (Continued)

Unit Size	Heating Rise °F (°C)	Motor Speed	Allowable Functions	Motor Speed Selection		ESP (in. W.C.)	0.1	0.2	0.3	0.4	0.5	0.6	0.7	0.8	0.9	1
24040	25 - 55 (14 - 31)	5	Dehumidification High	SW1-5	SW1-6	CFM	804	725	643	555	471	380	281	145	NA	NA
				OFF	OFF											
			High Stage Cooling	SW1-1	SW1-2	BHP	0.11	0.12	0.13	0.13	0.13	0.14	0.14	0.14	NA	NA
				OFF	OFF											
			High Stage Heating*	SW2-1	SW2-2	Gas Heat Rise (°F)	37	41	46	54	NA	NA	NA	NA	NA	NA
				OFF	OFF	Gas Heat Rise (°C)	21	23	26	30	NA	NA	NA	NA	NA	NA
		6	Dehumidification High	SW1-5	SW1-6	CFM	956	883	817	747	676	604	529	450	348	241
				ON	OFF											
			High Stage Cooling	SW1-1	SW1-2	BHP	0.17	0.18	0.18	0.19	0.19	0.20	0.20	0.21	0.21	0.22
				ON	OFF											
			High Stage Heating	SW2-1	SW2-2	Gas Heat Rise (°F)	31	34	36	40	44	49	56	66	86	123
				ON	OFF	Gas Heat Rise (°C)	17	19	20	22	24	27	31	37	48	69
		7	Dehumidification High	SW1-5	SW1-6	CFM	1094	1035	975	913	851	785	713	638	566	472
				OFF	ON											
			High Stage Cooling*	SW1-1	SW1-2	BHP	0.24	0.25	0.25	0.26	0.27	0.27	0.28	0.28	0.29	0.29
				OFF	ON											
			High Stage Heating	SW2-1	SW2-2	Gas Heat Rise (°F)	27	29	31	33	35	38	42	47	53	NA
				OFF	ON	Gas Heat Rise (°C)	15	16	17	18	19	21	23	26	29	NA
		8	Dehumidification High	SW1-5	SW1-6	CFM	1180	1118	1059	1002	943	885	827	766	707	643
				ON	ON											
			High Stage Cooling	SW1-1	SW1-2	BHP	0.27	0.28	0.29	0.30	0.30	0.31	0.32	0.32	0.33	0.34
				ON	ON											
			High Stage Heating	SW2-1	SW2-2	Gas Heat Rise (°F)	25	27	28	30	32	34	36	39	42	46
				ON	ON											
			High Static Cooling	SW2-8		Gas Heat Rise (°C)	14	15	16	17	18	19	20	21	22	23
				OFF												
		9	High Static Cooling	SW2-8		CFM	1369	1308	1255	1204	1152	1105	1052	999	909	806
				ON		BHP	0.40	0.41	0.41	0.42	0.43	0.44	0.45	0.46	0.44	0.42

Dry Coil Air Delivery** - Horizontal and Downflow Discharge Sizes 24-60 208/230 VAC - 1, 3 Phase (Continued)

Unit Size	Heating Rise °F (°C)	Motor Speed	Allowable Functions	Motor Speed Selection		ESP (in. W.C.)	0.1	0.2	0.3	0.4	0.5	0.6	0.7	0.8	0.9	1
24060	25 - 55 (14 - 31)	1	Continuous Fan	SW2-5	SW2-6	CFM	480	460	344	212	NA	NA	NA	NA	NA	NA
				OFF	OFF											
			Dehumidification Low	SW1-7	SW1-8											
				OFF	OFF											
			Low Stage Cooling	SW1-3	SW1-4	BHP	0.06	0.06	0.07	0.07	NA	NA	NA	NA	NA	NA
				OFF	OFF											
			Low Stage Heating	SW2-3	SW2-4	Gas Heat Rise (°F)	NA	NA	NA	NA	NA	NA	NA	NA	NA	NA
				OFF	OFF	Gas Heat Rise (°C)	NA	NA	NA	NA	NA	NA	NA	NA	NA	NA
		2	Continuous Fan*	SW2-5	SW2-6	CFM	712	625	531	440	344	208	NA	NA	NA	NA
				ON	OFF											
			Dehumidification Low	SW1-7	SW1-8											
				ON	OFF											
			Low Stage Cooling	SW1-3	SW1-4	BHP	0.09	0.10	0.10	0.10	0.11	0.11	NA	NA	NA	NA
				ON	OFF											
			Low Stage Heating	SW2-3	SW2-4	Gas Heat Rise (°F)	41	46	55	NA	NA	NA	NA	NA	NA	NA
				ON	OFF	Gas Heat Rise (°C)	23	26	30	NA	NA	NA	NA	NA	NA	NA
		3	Continuous Fan	SW2-5	SW2-6	CFM	747	663	575	473	370	289	179	NA	NA	NA
				OFF	ON											
			Dehumidification Low	SW1-7	SW1-8											
				OFF	ON											
			Low Stage Cooling	SW1-3	SW1-4	BHP	0.10	0.11	0.11	0.12	0.12	0.13	0.13	NA	NA	NA
				OFF	ON											
			Low Stage Heating*	SW2-3	SW2-4	Gas Heat Rise (°F)	39	44	50	NA	NA	NA	NA	NA	NA	NA
				OFF	ON	Gas Heat Rise (°C)	22	24	28	NA	NA	NA	NA	NA	NA	NA
		4	Continuous Fan	SW2-5	SW2-6	CFM	805	721	641	565	471	383	274	146	NA	NA
				ON	ON											
			Dehumidification Low	SW1-7	SW1-8											
				ON	ON											
			Low Stage Cooling*	SW1-3	SW1-4	BHP	0.11	0.12	0.13	0.13	0.13	0.14	0.14	0.15	NA	NA
				ON	ON											
			Low Stage Heating	SW2-3	SW2-4	Gas Heat Rise (°F)	36	40	45	51	NA	NA	NA	NA	NA	NA
				ON	ON	Gas Heat Rise (°C)	20	22	25	29	NA	NA	NA	NA	NA	NA

Manufacturer reserves the right to change, at any time, specifications and designs without notice and without obligations.

Dry Coil Air Delivery** - Horizontal and Downflow Discharge Sizes 24-60 208/230 VAC - 1, 3 Phase (Continued)

Unit Size	Heating Rise °F (°C)	Motor Speed	Allowable Functions	Motor Speed Selection		ESP (in. W.C.)	0.1	0.2	0.3	0.4	0.5	0.6	0.7	0.8	0.9	1
24060	25 - 55 (14 - 31)	5	Dehumidification High	SW1-5	SW1-6	CFM	804	725	643	555	471	380	281	145	NA	NA
				OFF	OFF											
			High Stage Cooling	SW1-1	SW1-2	BHP	0.11	0.12	0.13	0.13	0.13	0.14	0.14	0.14	NA	NA
				OFF	OFF											
			High Stage Heating	SW2-1	SW2-2	Gas Heat Rise (°F)	NA	NA	NA	NA	NA	NA	NA	NA	NA	NA
				OFF	OFF	Gas Heat Rise (°C)	NA	NA	NA	NA	NA	NA	NA	NA	NA	NA
		6	Dehumidification High	SW1-5	SW1-6	CFM	956	883	817	747	676	604	529	450	348	241
				ON	OFF											
			High Stage Cooling	SW1-1	SW1-2	BHP	0.17	0.18	0.18	0.19	0.19	0.20	0.20	0.21	0.21	0.22
				ON	OFF											
			High Stage Heating	SW2-1	SW2-2	Gas Heat Rise (°F)	47	51	55	NA	NA	NA	NA	NA	NA	NA
				ON	OFF	Gas Heat Rise (°C)	26	28	30	NA	NA	NA	NA	NA	NA	NA
		7	Dehumidification High	SW1-5	SW1-6	CFM	1094	1035	975	913	851	785	713	638	566	472
				OFF	ON											
			High Stage Cooling*	SW1-1	SW1-2	BHP	0.24	0.25	0.25	0.26	0.27	0.27	0.28	0.28	0.29	0.29
				OFF	ON											
			High Stage Heating	SW2-1	SW2-2	Gas Heat Rise (°F)	41	43	46	49	52	NA	NA	NA	NA	NA
				OFF	ON	Gas Heat Rise (°C)	23	24	25	27	29	NA	NA	NA	NA	NA
		8	Dehumidification High	SW1-5	SW1-6	CFM	1180	1118	1059	1002	943	885	827	766	707	643
				ON	ON											
			High Stage Cooling	SW1-1	SW1-2	BHP	0.27	0.28	0.29	0.30	0.30	0.31	0.32	0.32	0.33	0.34
				ON	ON											
			High Stage Heating*	SW2-1	SW2-2	Gas Heat Rise (°F)	38	40	42	45	47	50	54	NA	NA	NA
				ON	ON											
			High Static Cooling	SW2-8		Gas Heat Rise (°C)	21	22	23	25	26	28	30	NA	NA	NA
				OFF												
		9	High Static Cooling	SW2-8		CFM	1369	1308	1255	1204	1152	1105	1052	999	909	806
				ON		BHP	0.40	0.41	0.41	0.42	0.43	0.44	0.45	0.46	0.44	0.42

Manufacturer reserves the right to change, at any time, specifications and designs without notice and without obligations.

Dry Coil Air Delivery** - Horizontal and Downflow Discharge Sizes 24-60 208/230 VAC - 1, 3 Phase (Continued)

Unit Size	Heating Rise °F (°C)	Motor Speed	Allowable Functions	Motor Speed Selection		ESP (in. W.C.)	0.1	0.2	0.3	0.4	0.5	0.6	0.7	0.8	0.9	1
36060	25 - 55 (14 - 31)	1	Continuous Fan	SW2-5	SW2-6	CFM	749	670	593	495	418	333	261	186	139	NA
				OFF	OFF											
			Dehumidification Low	SW1-7	SW1-8											
				OFF	OFF											
			Low Stage Cooling	SW1-3	SW1-4	BHP	0.06	0.07	0.08	0.09	0.09	0.10	0.11	0.11	0.12	NA
				OFF	OFF											
			Low Stage Heating*	SW2-3	SW2-4	Gas Heat Rise (°F)	39	43	49	NA	NA	NA	NA	NA	NA	NA
				OFF	OFF	Gas Heat Rise (°C)	22	24	27	NA	NA	NA	NA	NA	NA	NA
		2	Continuous Fan*	SW2-5	SW2-6	CFM	818	742	673	598	512	434	358	279	217	168
				ON	OFF											
			Dehumidification Low	SW1-7	SW1-8											
				ON	OFF											
			Low Stage Cooling	SW1-3	SW1-4	BHP	0.08	0.08	0.09	0.10	0.11	0.12	0.12	0.13	0.13	0.14
				ON	OFF											
			Low Stage Heating	SW2-3	SW2-4	Gas Heat Rise (°F)	35	39	43	49	NA	NA	NA	NA	NA	NA
				ON	OFF	Gas Heat Rise (°C)	20	22	24	27	NA	NA	NA	NA	NA	NA
		3	Continuous Fan	SW2-5	SW2-6	CFM	980	882	814	747	679	608	545	482	432	384
				OFF	ON											
			Dehumidification Low	SW1-7	SW1-8											
				OFF	ON											
			Low Stage Cooling	SW1-3	SW1-4	BHP	0.11	0.11	0.12	0.12	0.13	0.14	0.15	0.15	0.16	0.17
				OFF	ON											
			Low Stage Heating	SW2-3	SW2-4	Gas Heat Rise (°F)	30	33	36	39	43	48	53	NA	NA	NA
				OFF	ON	Gas Heat Rise (°C)	16	18	20	22	24	27	30	NA	NA	NA
		4	Continuous Fan	SW2-5	SW2-6	CFM	1028	964	901	838	774	711	647	588	532	484
				ON	ON											
			Dehumidification Low	SW1-7	SW1-8											
				ON	ON											
			Low Stage Cooling*	SW1-3	SW1-4	BHP	0.12	0.13	0.14	0.15	0.15	0.16	0.17	0.18	0.19	0.19
				ON	ON											
			Low Stage Heating	SW2-3	SW2-4	Gas Heat Rise (°F)	28	30	32	35	37	41	45	49	55	NA
				ON	ON	Gas Heat Rise (°C)	16	17	18	19	21	23	25	27	30	NA

Manufacturer reserves the right to change, at any time, specifications and designs without notice and without obligations.

Dry Coil Air Delivery** - Horizontal and Downflow Discharge Sizes 24-60 208/230 VAC - 1, 3 Phase (Continued)

Unit Size	Heating Rise °F (°C)	Motor Speed	Allowable Functions	Motor Speed Selection		ESP (in. W.C.)	0.1	0.2	0.3	0.4	0.5	0.6	0.7	0.8	0.9	1
36060	25 - 55 (14 - 31)	5	Dehumidification High	SW1-5	SW1-6	CFM	1164	1107	1051	995	939	882	824	767	711	656
				OFF	OFF											
			High Stage Cooling	SW1-1	SW1-2	BHP	0.16	0.17	0.18	0.19	0.20	0.21	0.22	0.22	0.23	0.24
				OFF	OFF											
			High Stage Heating*	SW2-1	SW2-2	Gas Heat Rise (°F)	38	40	42	45	48	51	54	NA	NA	NA
				OFF	OFF	Gas Heat Rise (°C)	21	22	24	25	26	28	30	NA	NA	NA
		6	Dehumidification High	SW1-5	SW1-6	CFM	1299	1246	1196	1146	1095	1043	990	937	886	825
				ON	OFF											
			High Stage Cooling	SW1-1	SW1-2	BHP	0.21	0.21	0.22	0.23	0.24	0.25	0.26	0.27	0.28	0.29
				ON	OFF											
			High Stage Heating	SW2-1	SW2-2	Gas Heat Rise (°F)	34	36	37	39	41	43	45	48	50	54
				ON	OFF	Gas Heat Rise (°C)	19	20	21	22	23	24	25	26	28	30
		7	Dehumidification High	SW1-5	SW1-6	CFM	1391	1340	1294	1247	1199	1151	1104	1054	1003	946
				OFF	ON											
			High Stage Cooling	SW1-1	SW1-2	BHP	0.25	0.26	0.27	0.28	0.29	0.30	0.31	0.32	0.33	0.34
				OFF	ON											
			High Stage Heating	SW2-1	SW2-2	Gas Heat Rise (°F)	32	33	34	36	37	39	40	42	45	47
				OFF	ON	Gas Heat Rise (°C)	18	19	19	20	21	22	22	24	25	26
		8	Dehumidification High	SW1-5	SW1-6	CFM	1423	1377	1331	1288	1240	1192	1147	1097	1047	998
				ON	ON											
			High Stage Cooling*	SW1-1	SW1-2	BHP	0.26	0.27	0.28	0.29	0.30	0.32	0.33	0.34	0.35	0.36
				ON	ON											
			High Stage Heating	SW2-1	SW2-2	Gas Heat Rise (°F)	31	32	34	35	36	37	39	41	43	45
				ON	ON											
			High Static Cooling	SW2-8		Gas Heat Rise (°C)	17	18	19	19	20	21	22	23	24	25
				OFF												
		9	High Static Cooling	SW2-8		CFM	1511	1466	1420	1378	1338	1293	1245	1200	1156	1109
				ON		BHP	0.30	0.31	0.33	0.34	0.35	0.36	0.37	0.38	0.39	0.40

Dry Coil Air Delivery** - Horizontal and Downflow Discharge Sizes 24-60 208/230 VAC - 1, 3 Phase (Continued)

Unit Size	Heating Rise °F (°C)	Motor Speed	Allowable Functions	Motor Speed Selection		ESP (in. W.C.)	0.1	0.2	0.3	0.4	0.5	0.6	0.7	0.8	0.9	1
36090	35 - 65 (19 - 36)	1	Continuous Fan	SW2-5	SW2-6	CFM	749	670	593	495	418	333	261	186	139	NA
				OFF	OFF											
			Dehumidification Low	SW1-7	SW1-8											
				OFF	OFF											
			Low Stage Cooling	SW1-3	SW1-4	BHP	0.06	0.07	0.08	0.09	0.09	0.10	0.11	0.11	0.12	NA
				OFF	OFF											
			Low Stage Heating	SW2-3	SW2-4	Gas Heat Rise (°F)	58	65	NA	NA	NA	NA	NA	NA	NA	NA
				OFF	OFF	Gas Heat Rise (°C)	32	36	NA	NA	NA	NA	NA	NA	NA	NA
		2	Continuous Fan*	SW2-5	SW2-6	CFM	818	742	673	598	512	434	358	279	217	168
				ON	OFF											
			Dehumidification Low	SW1-7	SW1-8											
				ON	OFF											
			Low Stage Cooling	SW1-3	SW1-4	BHP	0.08	0.08	0.09	0.10	0.11	0.12	0.12	0.13	0.13	0.14
				ON	OFF											
			Low Stage Heating	SW2-3	SW2-4	Gas Heat Rise (°F)	53	59	65	NA	NA	NA	NA	NA	NA	NA
				ON	OFF	Gas Heat Rise (°C)	30	33	36	NA	NA	NA	NA	NA	NA	NA
		3	Continuous Fan	SW2-5	SW2-6	CFM	980	882	814	747	679	608	545	482	432	384
				OFF	ON											
			Dehumidification Low	SW1-7	SW1-8											
				OFF	ON											
			Low Stage Cooling	SW1-3	SW1-4	BHP	0.11	0.11	0.12	0.12	0.13	0.14	0.15	0.15	0.16	0.17
				OFF	ON											
			Low Stage Heating*	SW2-3	SW2-4	Gas Heat Rise (°F)	44	49	53	58	64	NA	NA	NA	NA	NA
				OFF	ON	Gas Heat Rise (°C)	25	27	30	32	36	NA	NA	NA	NA	NA
		4	Continuous Fan	SW2-5	SW2-6	CFM	1028	964	901	838	774	711	647	588	532	484
				ON	ON											
			Dehumidification Low	SW1-7	SW1-8											
				ON	ON											
			Low Stage Cooling*	SW1-3	SW1-4	BHP	0.12	0.13	0.14	0.15	0.15	0.16	0.17	0.18	0.19	0.19
				ON	ON											
			Low Stage Heating	SW2-3	SW2-4	Gas Heat Rise (°F)	42	45	48	52	56	61	NA	NA	NA	NA
				ON	ON	Gas Heat Rise (°C)	24	25	27	29	31	34	NA	NA	NA	NA

Manufacturer reserves the right to change, at any time, specifications and designs without notice and without obligations.

Dry Coil Air Delivery** - Horizontal and Downflow Discharge Sizes 24-60 208/230 VAC - 1, 3 Phase (Continued)

Unit Size	Heating Rise °F (°C)	Motor Speed	Allowable Functions	Motor Speed Selection		ESP (in. W.C.)	0.1	0.2	0.3	0.4	0.5	0.6	0.7	0.8	0.9	1
36090	35 - 65 (19 - 36)	5	Dehumidification High	SW1-5	SW1-6	CFM	1164	1107	1051	995	939	882	824	767	711	656
				OFF	OFF											
			High Stage Cooling	SW1-1	SW1-2	BHP	0.16	0.17	0.18	0.19	0.20	0.21	0.22	0.22	0.23	0.24
				OFF	OFF											
			High Stage Heating	SW2-1	SW2-2	Gas Heat Rise (°F)	58	60	64	NA	NA	NA	NA	NA	NA	NA
				OFF	OFF	Gas Heat Rise (°C)	32	34	35	NA	NA	NA	NA	NA	NA	NA
		6	Dehumidification High	SW1-5	SW1-6	CFM	1299	1246	1196	1146	1095	1043	990	937	886	825
				ON	OFF											
			High Stage Cooling	SW1-1	SW1-2	BHP	0.21	0.21	0.22	0.23	0.24	0.25	0.26	0.27	0.28	0.29
				ON	OFF											
			High Stage Heating	SW2-1	SW2-2	Gas Heat Rise (°F)	52	54	56	58	61	64	NA	NA	NA	NA
				ON	OFF	Gas Heat Rise (°C)	29	30	31	32	34	36	NA	NA	NA	NA
		7	Dehumidification High	SW1-5	SW1-6	CFM	1391	1340	1294	1247	1199	1151	1104	1054	1003	946
				OFF	ON											
			High Stage Cooling	SW1-1	SW1-2	BHP	0.25	0.26	0.27	0.28	0.29	0.30	0.31	0.32	0.33	0.34
				OFF	ON											
			High Stage Heating*	SW2-1	SW2-2	Gas Heat Rise (°F)	48	50	52	54	56	58	61	64	NA	NA
				OFF	ON	Gas Heat Rise (°C)	27	28	29	30	31	32	34	35	NA	NA
		8	Dehumidification High	SW1-5	SW1-6	CFM	1423	1377	1331	1288	1240	1192	1147	1097	1047	998
				ON	ON											
			High Stage Cooling*	SW1-1	SW1-2	BHP	0.26	0.27	0.28	0.29	0.30	0.32	0.33	0.34	0.35	0.36
				ON	ON											
			High Stage Heating	SW2-1	SW2-2	Gas Heat Rise (°F)	47	49	50	52	54	56	58	61	64	NA
				ON	ON											
			High Static Cooling	SW2-8		Gas Heat Rise (°C)	26	27	28	29	30	31	32	34	36	NA
				OFF												
		9	High Static Cooling	SW2-8		CFM	1511	1466	1420	1378	1338	1293	1245	1200	1156	1109
				ON		BHP	0.30	0.31	0.33	0.34	0.35	0.36	0.37	0.38	0.39	0.40

Manufacturer reserves the right to change, at any time, specifications and designs without notice and without obligations.

Dry Coil Air Delivery** - Horizontal and Downflow Discharge Sizes 24-60 208/230 VAC - 1, 3 Phase (Continued)

Unit Size	Heating Rise °F (°C)	Motor Speed	Allowable Functions	Motor Speed Selection		ESP (in. W.C.)	0.1	0.2	0.3	0.4	0.5	0.6	0.7	0.8	0.9	1
48090	35 - 65 (19 - 36)	1	Continuous Fan*	SW2-5 OFF	SW2-6 OFF	CFM	903	696	622	552	482	419	358	303	255	199
			Dehumidification Low	SW1-7 OFF	SW1-8 OFF											
			Low Stage Cooling	SW1-3 OFF	SW1-4 OFF	BHP	0.10	0.08	0.09	0.09	0.10	0.11	0.11	0.12	0.13	0.13
			Low Stage Heating	SW2-3 OFF	SW2-4 OFF	Gas Heat Rise (°F)	48	63	NA	NA	NA	NA	NA	NA	NA	NA
						Gas Heat Rise (°C)	27	35	NA	NA	NA	NA	NA	NA	NA	NA
		2	Continuous Fan	SW2-5 ON	SW2-6 OFF	CFM	945	885	820	757	696	638	579	527	480	429
			Dehumidification Low	SW1-7 ON	SW1-8 OFF											
			Low Stage Cooling	SW1-3 ON	SW1-4 OFF	BHP	0.11	0.12	0.12	0.13	0.14	0.15	0.16	0.16	0.17	0.18
			Low Stage Heating*	SW2-3 ON	SW2-4 OFF	Gas Heat Rise (°F)	46	49	53	57	63	NA	NA	NA	NA	NA
						Gas Heat Rise (°C)	26	27	29	32	35	NA	NA	NA	NA	NA
		3	Continuous Fan	SW2-5 OFF	SW2-6 ON	CFM	1102	1051	999	945	890	837	785	734	681	634
			Dehumidification Low	SW1-7 OFF	SW1-8 ON											
			Low Stage Cooling	SW1-3 OFF	SW1-4 ON	BHP	0.15	0.16	0.17	0.18	0.19	0.20	0.21	0.22	0.23	0.24
			Low Stage Heating	SW2-3 OFF	SW2-4 ON	Gas Heat Rise (°F)	39	41	44	46	49	52	55	59	64	NA
						Gas Heat Rise (°C)	22	23	24	26	27	29	31	33	36	NA
		4	Continuous Fan	SW2-5 ON	SW2-6 ON	CFM	1297	1253	1207	1163	1115	1066	1018	974	931	888
			Dehumidification Low	SW1-7 ON	SW1-8 ON											
			Low Stage Cooling*	SW1-3 ON	SW1-4 ON	BHP	0.23	0.24	0.24	0.26	0.27	0.27	0.28	0.29	0.30	0.31
			Low Stage Heating	SW2-3 ON	SW2-4 ON	Gas Heat Rise (°F)	34	35	36	37	39	41	43	45	47	49
						Gas Heat Rise (°C)	19	19	20	21	22	23	24	25	26	27

Manufacturer reserves the right to change, at any time, specifications and designs without notice and without obligations.

Dry Coil Air Delivery** - Horizontal and Downflow Discharge Sizes 24-60 208/230 VAC - 1, 3 Phase (Continued)

Unit Size	Heating Rise °F (°C)	Motor Speed	Allowable Functions	Motor Speed Selection		ESP (in. W.C.)	0.1	0.2	0.3	0.4	0.5	0.6	0.7	0.8	0.9	1
48090	35 - 65 (19 - 36)	5	Dehumidification High	SW1-5	SW1-6	CFM	1383	1339	1296	1254	1209	1163	1119	1076	1033	989
				OFF	OFF											
			High Stage Cooling	SW1-1	SW1-2	BHP	0.26	0.27	0.28	0.30	0.31	0.32	0.33	0.34	0.35	0.36
				OFF	OFF											
			High Stage Heating*	SW2-1	SW2-2	Gas Heat Rise (°F)	48	50	52	53	55	58	60	62	65	NA
				OFF	OFF	Gas Heat Rise (°C)	27	28	29	30	31	32	33	35	36	NA
		6	Dehumidification High	SW1-5	SW1-6	CFM	1550	1511	1473	1434	1399	1362	1319	1278	1238	1202
				ON	OFF											
			High Stage Cooling	SW1-1	SW1-2	BHP	0.36	0.37	0.38	0.39	0.40	0.41	0.42	0.44	0.45	0.46
				ON	OFF											
			High Stage Heating	SW2-1	SW2-2	Gas Heat Rise (°F)	43	44	45	47	48	49	51	52	54	56
				ON	OFF	Gas Heat Rise (°C)	24	25	25	26	27	27	28	29	30	31
		7	Dehumidification High	SW1-5	SW1-6	CFM	1799	1759	1725	1676	1625	1584	1546	1509	1473	1437
				OFF	ON											
			High Stage Cooling*	SW1-1	SW1-2	BHP	0.50	0.51	0.52	0.54	0.55	0.57	0.58	0.59	0.61	0.62
				OFF	ON											
			High Stage Heating	SW2-1	SW2-2	Gas Heat Rise (°F)	37	38	39	40	41	42	43	44	45	47
				OFF	ON	Gas Heat Rise (°C)	21	21	22	22	23	23	24	25	25	26
		8	Dehumidification High	SW1-5	SW1-6	CFM	1936	1901	1864	1831	1798	1767	1736	1702	1670	1633
				ON	ON											
			High Stage Cooling	SW1-1	SW1-2	BHP	0.63	0.64	0.65	0.66	0.68	0.69	0.70	0.71	0.73	0.74
				ON	ON											
			High Stage Heating	SW2-1	SW2-2	Gas Heat Rise (°F)	35	35	36	37	37	38	39	39	40	41
				ON	ON											
			High Static Cooling	SW2-8		Gas Heat Rise (°C)	19	20	20	20	21	21	21	22	22	23
				OFF												
		9	High Static Cooling	SW2-8		CFM	1966	1933	1903	1872	1842	1811	1782	1751	1718	1619
				ON		BHP	0.67	0.68	0.70	0.71	0.73	0.74	0.75	0.77	0.78	0.74

Dry Coil Air Delivery** - Horizontal and Downflow Discharge Sizes 24-60 208/230 VAC - 1, 3 Phase (Continued)

Unit Size	Heating Rise °F (°C)	Motor Speed	Allowable Functions	Motor Speed Selection		ESP (in. W.C.)	0.1	0.2	0.3	0.4	0.5	0.6	0.7	0.8	0.9	1
48115	30 - 60 (17 - 33)	1	Continuous Fan*	SW2-5 OFF	SW2-6 OFF	CFM	903	696	622	552	482	419	358	303	255	199
			Dehumidification Low	SW1-7 OFF	SW1-8 OFF											
			Low Stage Cooling	SW1-3 OFF	SW1-4 OFF	BHP	0.10	0.08	0.09	0.09	0.10	0.11	0.11	0.12	0.13	0.13
			Low Stage Heating	SW2-3 OFF	SW2-4 OFF	Gas Heat Rise (°F)	NA	NA	NA	NA	NA	NA	NA	NA	NA	NA
						Gas Heat Rise (°C)	NA	NA	NA	NA	NA	NA	NA	NA	NA	NA
		2	Continuous Fan	SW2-5 ON	SW2-6 OFF	CFM	945	885	820	757	696	638	579	527	480	429
			Dehumidification Low	SW1-7 ON	SW1-8 OFF											
			Low Stage Cooling	SW1-3 ON	SW1-4 OFF	BHP	0.11	0.12	0.12	0.13	0.14	0.15	0.16	0.16	0.17	0.18
			Low Stage Heating	SW2-3 ON	SW2-4 OFF	Gas Heat Rise (°F)	59	NA	NA	NA	NA	NA	NA	NA	NA	NA
						Gas Heat Rise (°C)	33	NA	NA	NA	NA	NA	NA	NA	NA	NA
		3	Continuous Fan	SW2-5 OFF	SW2-6 ON	CFM	1102	1051	999	945	890	837	785	734	681	634
			Dehumidification Low	SW1-7 OFF	SW1-8 ON											
			Low Stage Cooling	SW1-3 OFF	SW1-4 ON	BHP	0.15	0.16	0.17	0.18	0.19	0.20	0.21	0.22	0.23	0.24
			Low Stage Heating	SW2-3 OFF	SW2-4 ON	Gas Heat Rise (°F)	51	53	56	59	NA	NA	NA	NA	NA	NA
						Gas Heat Rise (°C)	28	29	31	33	NA	NA	NA	NA	NA	NA
		4	Dehumidification Low	SW1-7 ON	SW1-8 ON	CFM	1297	1253	1207	1163	1115	1066	1018	974	931	888
			Low Stage Cooling*	SW1-3 ON	SW1-4 ON	BHP	0.23	0.24	0.24	0.26	0.27	0.27	0.28	0.29	0.30	0.31
			Low Stage Heating*	SW2-3 ON	SW2-4 ON	Gas Heat Rise (°F)	43	45	46	48	50	52	55	57	60	NA
						Gas Heat Rise (°C)	24	25	26	27	28	29	30	32	33	NA

Manufacturer reserves the right to change, at any time, specifications and designs without notice and without obligations.

Dry Coil Air Delivery** - Horizontal and Downflow Discharge Sizes 24-60 208/230 VAC - 1, 3 Phase (Continued)

Unit Size	Heating Rise °F (°C)	Motor Speed	Allowable Functions	Motor Speed Selection			ESP (in. W.C.)									
							0.1	0.2	0.3	0.4	0.5	0.6	0.7	0.8	0.9	1
48115	30 - 60 (19 - 36)	5	Dehumidification High	SW1-5	SW1-6	CFM	1383	1339	1296	1254	1209	1163	1119	1076	1033	989
				OFF	OFF											
			High Stage Cooling	SW1-1	SW1-2	BHP	0.26	0.27	0.28	0.30	0.31	0.32	0.33	0.34	0.35	0.36
				OFF	OFF											
			High Stage Heating	SW2-1	SW2-2	Gas Heat Rise (°F)	NA	NA	NA	NA	NA	NA	NA	NA	NA	NA
				OFF	OFF	Gas Heat Rise (°C)	NA	NA	NA	NA	NA	NA	NA	NA	NA	NA
		6	Dehumidification High	SW1-5	SW1-6	CFM	1550	1511	1473	1434	1399	1362	1319	1278	1238	1202
				ON	OFF											
			High Stage Cooling	SW1-1	SW1-2	BHP	0.36	0.37	0.38	0.39	0.40	0.41	0.42	0.44	0.45	0.46
				ON	OFF											
			High Stage Heating	SW2-1	SW2-2	Gas Heat Rise (°F)	55	57	58	60	NA	NA	NA	NA	NA	NA
				ON	OFF	Gas Heat Rise (°C)	31	31	32	33	NA	NA	NA	NA	NA	NA
		7	Dehumidification High	SW1-5	SW1-6	CFM	1799	1759	1725	1676	1625	1584	1546	1509	1473	1437
				OFF	ON											
			High Stage Cooling*	SW1-1	SW1-2	BHP	0.50	0.51	0.52	0.54	0.55	0.57	0.58	0.59	0.61	0.62
				OFF	ON											
			High Stage Heating	SW2-1	SW2-2	Gas Heat Rise (°F)	48	49	50	51	53	54	55	57	58	60
				OFF	ON	Gas Heat Rise (°C)	26	27	28	28	29	30	31	31	32	33
		8	Dehumidification High	SW1-5	SW1-6	CFM	1936	1901	1864	1831	1798	1767	1736	1702	1670	1633
				ON	ON											
			High Stage Cooling	SW1-1	SW1-2	BHP	0.63	0.64	0.65	0.66	0.68	0.69	0.70	0.71	0.73	0.74
				ON	ON											
			High Stage Heating*	SW2-1	SW2-2	Gas Heat Rise (°F)	44	45	46	47	48	48	49	50	51	52
				ON	ON											
			High Static Cooling	SW2-8		Gas Heat Rise (°C)	25	25	26	26	26	27	27	28	28	29
				OFF												
		9	High Static Cooling	SW2-8		CFM	1966	1933	1903	1872	1842	1811	1782	1751	1718	1619
				ON		BHP	0.67	0.68	0.70	0.71	0.73	0.74	0.75	0.77	0.78	0.74

Manufacturer reserves the right to change, at any time, specifications and designs without notice and without obligations.

Dry Coil Air Delivery** - Horizontal and Downflow Discharge Sizes 24-60 208/230 VAC - 1, 3 Phase (Continued)

Unit Size	Heating Rise °F (°C)	Motor Speed	Allowable Functions	Motor Speed Selection		ESP (in. W.C.)	0.1	0.2	0.3	0.4	0.5	0.6	0.7	0.8	0.9	1
48130	35 - 65 (19 - 36)	1	Continuous Fan*	SW2-5 OFF	SW2-6 OFF	CFM	903	696	622	552	482	419	358	303	255	199
			Dehumidification Low	SW1-7 OFF	SW1-8 OFF											
			Low Stage Cooling	SW1-3 OFF	SW1-4 OFF	BHP	0.10	0.08	0.09	0.09	0.10	0.11	0.11	0.12	0.13	0.13
			Low Stage Heating	SW2-3 OFF	SW2-4 OFF	Gas Heat Rise (°F)	NA	NA	NA	NA	NA	NA	NA	NA	NA	NA
						Gas Heat Rise (°C)	NA	NA	NA	NA	NA	NA	NA	NA	NA	NA
		2	Continuous Fan	SW2-5 ON	SW2-6 OFF	CFM	945	885	820	757	696	638	579	527	480	429
			Dehumidification Low	SW1-7 ON	SW1-8 OFF											
			Low Stage Cooling	SW1-3 ON	SW1-4 OFF	BHP	0.11	0.12	0.12	0.13	0.14	0.15	0.16	0.16	0.17	0.18
			Low Stage Heating	SW2-3 ON	SW2-4 OFF	Gas Heat Rise (°F)	NA	NA	NA	NA	NA	NA	NA	NA	NA	NA
						Gas Heat Rise (°C)	NA	NA	NA	NA	NA	NA	NA	NA	NA	NA
		3	Continuous Fan	SW2-5 OFF	SW2-6 ON	CFM	1102	1051	999	945	890	837	785	734	681	634
			Dehumidification Low	SW1-7 OFF	SW1-8 ON											
			Low Stage Cooling	SW1-3 OFF	SW1-4 ON	BHP	0.15	0.16	0.17	0.18	0.19	0.20	0.21	0.22	0.23	0.24
			Low Stage Heating	SW2-3 OFF	SW2-4 ON	Gas Heat Rise (°F)	57	60	63	NA	NA	NA	NA	NA	NA	NA
						Gas Heat Rise (°C)	32	33	35	NA	NA	NA	NA	NA	NA	NA
		4	Continuous Fan	SW2-5 ON	SW2-6 ON	CFM	1297	1253	1207	1163	1115	1066	1018	974	931	888
			Dehumidification Low	SW1-7 ON	SW1-8 ON											
			Low Stage Cooling*	SW1-3 ON	SW1-4 ON	BHP	0.23	0.24	0.24	0.26	0.27	0.27	0.28	0.29	0.30	0.31
			Low Stage Heating*	SW2-3 ON	SW2-4 ON	Gas Heat Rise (°F)	48	50	52	54	56	59	62	65	NA	NA
						Gas Heat Rise (°C)	27	28	29	30	31	33	34	36	NA	NA

Manufacturer reserves the right to change, at any time, specifications and designs without notice and without obligations.

Dry Coil Air Delivery** - Horizontal and Downflow Discharge Sizes 24-60 208/230 VAC - 1, 3 Phase (Continued)

Unit Size	Heating Rise °F (°C)	Motor Speed	Allowable Functions	Motor Speed Selection		ESP (in. W.C.)	0.1	0.2	0.3	0.4	0.5	0.6	0.7	0.8	0.9	1
48130	35 - 65 (19 - 36)	5	Dehumidification High	SW1-5	SW1-6	CFM	1383	1339	1296	1254	1209	1163	1119	1076	1033	989
				OFF	OFF											
			High Stage Cooling	SW1-1	SW1-2	BHP	0.26	0.27	0.28	0.30	0.31	0.32	0.33	0.34	0.35	0.36
				OFF	OFF											
			High Stage Heating	SW2-1	SW2-2	Gas Heat Rise (°F)	NA	NA	NA	NA	NA	NA	NA	NA	NA	NA
				OFF	OFF	Gas Heat Rise (°C)	NA	NA	NA	NA	NA	NA	NA	NA	NA	NA
		6	Dehumidification High	SW1-5	SW1-6	CFM	1550	1511	1473	1434	1399	1362	1319	1278	1238	1202
				ON	OFF											
			High Stage Cooling	SW1-1	SW1-2	BHP	0.36	0.37	0.38	0.39	0.40	0.41	0.42	0.44	0.45	0.46
				ON	OFF											
			High Stage Heating	SW2-1	SW2-2	Gas Heat Rise (°F)	61	63	64	NA	NA	NA	NA	NA	NA	NA
				ON	OFF	Gas Heat Rise (°C)	34	35	36	NA	NA	NA	NA	NA	NA	NA
		7	Dehumidification High	SW1-5	SW1-6	CFM	1799	1759	1725	1676	1625	1584	1546	1509	1473	1437
				OFF	ON											
			High Stage Cooling*	SW1-1	SW1-2	BHP	0.50	0.51	0.52	0.54	0.55	0.57	0.58	0.59	0.61	0.62
				OFF	ON											
			High Stage Heating	SW2-1	SW2-2	Gas Heat Rise (°F)	53	54	55	56	58	60	61	63	64	66
				OFF	ON	Gas Heat Rise (°C)	29	30	30	31	32	33	34	35	36	37
		8	Dehumidification High	SW1-5	SW1-6	CFM	1936	1901	1864	1831	1798	1767	1736	1702	1670	1633
				ON	ON											
			High Stage Cooling	SW1-1	SW1-2	BHP	0.63	0.64	0.65	0.66	0.68	0.69	0.70	0.71	0.73	0.74
				ON	ON											
			High Stage Heating*	SW2-1	SW2-2	Gas Heat Rise (°F)	49	50	51	52	53	53	54	56	57	58
				ON	ON											
			High Static Cooling	SW2-8		Gas Heat Rise (°C)	27	28	28	29	29	30	30	31	31	32
				OFF												
		9	High Static Cooling	SW2-8		CFM	1966	1933	1903	1872	1842	1811	1782	1751	1718	1619
				ON		BHP	0.67	0.68	0.70	0.71	0.73	0.74	0.75	0.77	0.78	0.74

Manufacturer reserves the right to change, at any time, specifications and designs without notice and without obligations.

Dry Coil Air Delivery** - Horizontal and Downflow Discharge Sizes 24-60 208/230 VAC - 1, 3 Phase (Continued)

Unit Size	Heating Rise °F (°C)	Motor Speed	Allowable Functions	Motor Speed Selection		ESP (in. W.C.)	0.1	0.2	0.3	0.4	0.5	0.6	0.7	0.8	0.9	1
60090	35 - 65 (19 - 36)	1	Continuous Fan*	SW2-5	SW2-6	CFM	903	696	622	552	482	419	358	303	255	199
				OFF	OFF											
			Dehumidification Low	SW1-7	SW1-8											
				OFF	OFF											
			Low Stage Cooling	SW1-3	SW1-4	BHP	0.10	0.08	0.09	0.09	0.10	0.11	0.11	0.12	0.13	0.13
				OFF	OFF											
			Low Stage Heating	SW2-3	SW2-4	Gas Heat Rise (°F)	48	63	NA	NA	NA	NA	NA	NA	NA	NA
				OFF	OFF	Gas Heat Rise (°C)	27	35	NA	NA	NA	NA	NA	NA	NA	NA
		2	Continuous Fan	SW2-5	SW2-6	CFM	945	885	820	757	696	638	579	527	480	429
				ON	OFF											
			Dehumidification Low	SW1-7	SW1-8											
				ON	OFF											
			Low Stage Cooling	SW1-3	SW1-4	BHP	0.11	0.12	0.12	0.13	0.14	0.15	0.16	0.16	0.17	0.18
				ON	OFF											
			Low Stage Heating*	SW2-3	SW2-4	Gas Heat Rise (°F)	46	49	53	57	63	NA	NA	NA	NA	NA
				ON	OFF	Gas Heat Rise (°C)	26	27	29	32	35	NA	NA	NA	NA	NA
		3	Continuous Fan	SW2-5	SW2-6	CFM	1102	1051	999	945	890	837	785	734	681	634
				OFF	ON											
			Dehumidification Low	SW1-7	SW1-8											
				OFF	ON											
			Low Stage Cooling	SW1-3	SW1-4	BHP	0.15	0.16	0.17	0.18	0.19	0.20	0.21	0.22	0.23	0.24
				OFF	ON											
			Low Stage Heating	SW2-3	SW2-4	Gas Heat Rise (°F)	39	41	44	46	49	52	55	59	64	NA
				OFF	ON	Gas Heat Rise (°C)	22	23	24	26	27	29	31	33	36	NA
		4	Continuous Fan	SW2-5	SW2-6	CFM	1297	1253	1207	1163	1115	1066	1018	974	931	888
				ON	ON											
			Dehumidification Low	SW1-7	SW1-8											
				ON	ON											
			Low Stage Cooling*	SW1-3	SW1-4	BHP	0.23	0.24	0.24	0.26	0.27	0.27	0.28	0.29	0.30	0.31
				ON	ON											
			Low Stage Heating	SW2-3	SW2-4	Gas Heat Rise (°F)	34	35	36	37	39	41	43	45	47	49
				ON	ON	Gas Heat Rise (°C)	19	19	20	21	22	23	24	25	26	27

Manufacturer reserves the right to change, at any time, specifications and designs without notice and without obligations.

Dry Coil Air Delivery** - Horizontal and Downflow Discharge Sizes 24-60 208/230 VAC - 1, 3 Phase (Continued)

Unit Size	Heating Rise °F (°C)	Motor Speed	Allowable Functions	Motor Speed Selection		ESP (in. W.C.)	0.1	0.2	0.3	0.4	0.5	0.6	0.7	0.8	0.9	1
60090	35 - 65 (19 - 36)	5	Dehumidification High	SW1-5	SW1-6	CFM	1383	1339	1296	1254	1209	1163	1119	1076	1033	989
				OFF	OFF											
			High Stage Cooling	SW1-1	SW1-2	BHP	0.26	0.27	0.28	0.30	0.31	0.32	0.33	0.34	0.35	0.36
				OFF	OFF											
			High Stage Heating*	SW2-1	SW2-2	Gas Heat Rise (°F)	48	50	52	53	55	58	60	62	65	NA
				OFF	OFF	Gas Heat Rise (°C)	27	28	29	30	31	32	33	35	36	NA
		6	Dehumidification High	SW1-5	SW1-6	CFM	1550	1511	1473	1434	1399	1362	1319	1278	1238	1202
				ON	OFF											
			High Stage Cooling	SW1-1	SW1-2	BHP	0.36	0.37	0.38	0.39	0.40	0.41	0.42	0.44	0.45	0.46
				ON	OFF											
			High Stage Heating	SW2-1	SW2-2	Gas Heat Rise (°F)	43	44	45	47	48	49	51	52	54	56
				ON	OFF	Gas Heat Rise (°C)	24	25	25	26	27	27	28	29	30	31
		7	Dehumidification High	SW1-5	SW1-6	CFM	1943	1905	1867	1818	1787	1743	1705	1664	1624	1587
				OFF	ON											
			High Stage Cooling*	SW1-1	SW1-2	BHP	0.63	0.64	0.66	0.67	0.68	0.69	0.70	0.71	0.73	0.74
				OFF	ON											
			High Stage Heating	SW2-1	SW2-2	Gas Heat Rise (°F)	34	35	36	37	37	38	39	40	41	42
				OFF	ON	Gas Heat Rise (°C)	19	20	20	20	21	21	22	22	23	23
		8	Dehumidification High	SW1-5	SW1-6	CFM	1936	1901	1864	1831	1798	1767	1736	1702	1670	1633
				ON	ON											
			High Stage Cooling	SW1-1	SW1-2	BHP	0.63	0.64	0.65	0.66	0.68	0.69	0.70	0.71	0.73	0.74
				ON	ON											
			High Stage Heating	SW2-1	SW2-2	Gas Heat Rise (°F)	35	35	36	37	37	38	39	39	40	41
				ON	ON											
			High Static Cooling	SW2-8		Gas Heat Rise (°C)	19	20	20	20	21	21	21	22	22	23
				OFF												
		9	High Static Cooling	SW2-8		CFM	1966	1933	1903	1872	1842	1811	1782	1751	1718	1619
				ON		BHP	0.67	0.68	0.70	0.71	0.73	0.74	0.75	0.77	0.78	0.74

Manufacturer reserves the right to change, at any time, specifications and designs without notice and without obligations.

Dry Coil Air Delivery** - Horizontal and Downflow Discharge Sizes 24-60 208/230 VAC - 1, 3 Phase (Continued)

Unit Size	Heating Rise °F (°C)	Motor Speed	Allowable Functions	Motor Speed Selection		ESP (in. W.C.)	0.1	0.2	0.3	0.4	0.5	0.6	0.7	0.8	0.9	1
60115	30 - 60 (17 - 33)	1	Continuous Fan*	SW2-5	SW2-6	CFM	903	696	622	552	482	419	358	303	255	199
				OFF	OFF											
			Dehumidification Low	SW1-7	SW1-8											
				OFF	OFF											
			Low Stage Cooling	SW1-3	SW1-4	BHP	0.10	0.08	0.09	0.09	0.10	0.11	0.11	0.12	0.13	0.13
				OFF	OFF											
			Low Stage Heating	SW2-3	SW2-4	Gas Heat Rise (°F)	NA	NA	NA	NA	NA	NA	NA	NA	NA	NA
				OFF	OFF	Gas Heat Rise (°C)	NA	NA	NA	NA	NA	NA	NA	NA	NA	NA
		2	Continuous Fan	SW2-5	SW2-6	CFM	945	885	820	757	696	638	579	527	480	429
				ON	OFF											
			Dehumidification Low	SW1-7	SW1-8											
				ON	OFF											
			Low Stage Cooling	SW1-3	SW1-4	BHP	0.11	0.12	0.12	0.13	0.14	0.15	0.16	0.16	0.17	0.18
				ON	OFF											
			Low Stage Heating	SW2-3	SW2-4	Gas Heat Rise (°F)	59	NA	NA	NA	NA	NA	NA	NA	NA	NA
				ON	OFF	Gas Heat Rise (°C)	33	NA	NA	NA	NA	NA	NA	NA	NA	NA
		3	Continuous Fan	SW2-5	SW2-6	CFM	1102	1051	999	945	890	837	785	734	681	634
				OFF	ON											
			Dehumidification Low	SW1-7	SW1-8											
				OFF	ON											
			Low Stage Cooling	SW1-3	SW1-4	BHP	0.15	0.16	0.17	0.18	0.19	0.20	0.21	0.22	0.23	0.24
				OFF	ON											
			Low Stage Heating	SW2-3	SW2-4	Gas Heat Rise (°F)	51	53	56	59	NA	NA	NA	NA	NA	NA
				OFF	ON	Gas Heat Rise (°C)	28	29	31	33	NA	NA	NA	NA	NA	NA
		4				CFM	1297	1253	1207	1163	1115	1066	1018	974	931	888
			Dehumidification Low	SW1-7	SW1-8											
				ON	ON											
			Low Stage Cooling*	SW1-3	SW1-4	BHP	0.23	0.24	0.24	0.26	0.27	0.27	0.28	0.29	0.30	0.31
				ON	ON											
			Low Stage Heating*	SW2-3	SW2-4	Gas Heat Rise (°F)	43	45	46	48	50	52	55	57	60	NA
				ON	ON	Gas Heat Rise (°C)	24	25	26	27	28	29	30	32	33	NA

Manufacturer reserves the right to change, at any time, specifications and designs without notice and without obligations.

Dry Coil Air Delivery** - Horizontal and Downflow Discharge Sizes 24-60 208/230 VAC - 1, 3 Phase (Continued)

Unit Size	Heating Rise °F (°C)	Motor Speed	Allowable Functions	Motor Speed Selection		ESP (in. W.C.)	0.1	0.2	0.3	0.4	0.5	0.6	0.7	0.8	0.9	1
60115	30 - 60 (19 - 36)	5	Dehumidification High	SW1-5	SW1-6	CFM	1383	1339	1296	1254	1209	1163	1119	1076	1033	989
				OFF	OFF											
			High Stage Cooling	SW1-1	SW1-2	BHP	0.26	0.27	0.28	0.30	0.31	0.32	0.33	0.34	0.35	0.36
				OFF	OFF											
			High Stage Heating	SW2-1	SW2-2	Gas Heat Rise (°F)	NA	NA	NA	NA	NA	NA	NA	NA	NA	NA
				OFF	OFF	Gas Heat Rise (°C)	NA	NA	NA	NA	NA	NA	NA	NA	NA	NA
		6	Dehumidification High	SW1-5	SW1-6	CFM	1550	1511	1473	1434	1399	1362	1319	1278	1238	1202
				ON	OFF											
			High Stage Cooling	SW1-1	SW1-2	BHP	0.36	0.37	0.38	0.39	0.40	0.41	0.42	0.44	0.45	0.46
				ON	OFF											
			High Stage Heating	SW2-1	SW2-2	Gas Heat Rise (°F)	55	57	58	60	NA	NA	NA	NA	NA	NA
				ON	OFF	Gas Heat Rise (°C)	31	31	32	33	NA	NA	NA	NA	NA	NA
		7	Dehumidification High	SW1-5	SW1-6	CFM	1943	1905	1867	1818	1787	1743	1705	1664	1624	1587
				OFF	ON											
			High Stage Cooling*	SW1-1	SW1-2	BHP	0.63	0.64	0.66	0.67	0.68	0.69	0.70	0.71	0.73	0.74
				OFF	ON											
			High Stage Heating	SW2-1	SW2-2	Gas Heat Rise (°F)	44	45	46	47	48	49	50	51	53	54
				OFF	ON	Gas Heat Rise (°C)	24	25	25	26	27	27	28	29	29	30
		8	Dehumidification High	SW1-5	SW1-6	CFM	1936	1901	1864	1831	1798	1767	1736	1702	1670	1633
				ON	ON											
			High Stage Cooling	SW1-1	SW1-2	BHP	0.63	0.64	0.65	0.66	0.68	0.69	0.70	0.71	0.73	0.74
				ON	ON											
			High Stage Heating*	SW2-1	SW2-2	Gas Heat Rise (°F)	44	45	46	47	48	48	49	50	51	52
				ON	ON											
			High Static Cooling	SW2-8		Gas Heat Rise (°C)	25	25	26	26	26	27	27	28	28	29
				OFF												
		9	High Static Cooling	SW2-8		CFM	1966	1933	1903	1872	1842	1811	1782	1751	1718	1619
				ON		BHP	0.67	0.68	0.70	0.71	0.73	0.74	0.75	0.77	0.78	0.74

Manufacturer reserves the right to change, at any time, specifications and designs without notice and without obligations.

Dry Coil Air Delivery** - Horizontal and Downflow Discharge Sizes 24-60 208/230 VAC - 1, 3 Phase (Continued)

Unit Size	Heating Rise °F (°C)	Motor Speed	Allowable Functions	Motor Speed Selection		ESP (in. W.C.)	0.1	0.2	0.3	0.4	0.5	0.6	0.7	0.8	0.9	1
60130	35 - 65 (19 - 36)	1	Continuous Fan*	SW2-5 OFF	SW2-6 OFF	CFM	903	696	622	552	482	419	358	303	255	199
			Dehumidification Low	SW1-7 OFF	SW1-8 OFF											
			Low Stage Cooling	SW1-3 OFF	SW1-4 OFF	BHP	0.10	0.08	0.09	0.09	0.10	0.11	0.11	0.12	0.13	0.13
			Low Stage Heating	SW2-3 OFF	SW2-4 OFF	Gas Heat Rise (°F)	NA	NA	NA	NA	NA	NA	NA	NA	NA	NA
						Gas Heat Rise (°C)	NA	NA	NA	NA	NA	NA	NA	NA	NA	NA
		2	Continuous Fan	SW2-5 ON	SW2-6 OFF	CFM	945	885	820	757	696	638	579	527	480	429
			Dehumidification Low	SW1-7 ON	SW1-8 OFF											
			Low Stage Cooling	SW1-3 ON	SW1-4 OFF	BHP	0.11	0.12	0.12	0.13	0.14	0.15	0.16	0.16	0.17	0.18
			Low Stage Heating	SW2-3 ON	SW2-4 OFF	Gas Heat Rise (°F)	NA	NA	NA	NA	NA	NA	NA	NA	NA	NA
						Gas Heat Rise (°C)	NA	NA	NA	NA	NA	NA	NA	NA	NA	NA
		3	Continuous Fan	SW2-5 OFF	SW2-6 ON	CFM	1102	1051	999	945	890	837	785	734	681	634
			Dehumidification Low	SW1-7 OFF	SW1-8 ON											
			Low Stage Cooling	SW1-3 OFF	SW1-4 ON	BHP	0.15	0.16	0.17	0.18	0.19	0.20	0.21	0.22	0.23	0.24
			Low Stage Heating	SW2-3 OFF	SW2-4 ON	Gas Heat Rise (°F)	57	60	63	NA	NA	NA	NA	NA	NA	NA
						Gas Heat Rise (°C)	32	33	35	NA	NA	NA	NA	NA	NA	NA
		4	Continuous Fan	SW2-5 ON	SW2-6 ON	CFM	1297	1253	1207	1163	1115	1066	1018	974	931	888
			Dehumidification Low	SW1-7 ON	SW1-8 ON											
			Low Stage Cooling*	SW1-3 ON	SW1-4 ON	BHP	0.23	0.24	0.24	0.26	0.27	0.27	0.28	0.29	0.30	0.31
			Low Stage Heating*	SW2-3 ON	SW2-4 ON	Gas Heat Rise (°F)	48	50	52	54	56	59	62	65	NA	NA
						Gas Heat Rise (°C)	27	28	29	30	31	33	34	36	NA	NA

Manufacturer reserves the right to change, at any time, specifications and designs without notice and without obligations.

Dry Coil Air Delivery** - Horizontal and Downflow Discharge Sizes 24-60 208/230 VAC - 1, 3 Phase (Continued)

Unit Size	Heating Rise °F (°C)	Motor Speed	Allowable Functions	Motor Speed Selection			ESP (in. W.C.)									
							0.1	0.2	0.3	0.4	0.5	0.6	0.7	0.8	0.9	1
60130	35 - 65 (19 - 36)	5	Dehumidification High	SW1-5	SW1-6	CFM	1383	1339	1296	1254	1209	1163	1119	1076	1033	989
				OFF	OFF											
			High Stage Cooling	SW1-1	SW1-2	BHP	0.26	0.27	0.28	0.30	0.31	0.32	0.33	0.34	0.35	0.36
				OFF	OFF											
			High Stage Heating	SW2-1	SW2-2	Gas Heat Rise (°F)	NA	NA	NA	NA	NA	NA	NA	NA	NA	NA
				OFF	OFF	Gas Heat Rise (°C)	NA	NA	NA	NA	NA	NA	NA	NA	NA	NA
		6	Dehumidification High	SW1-5	SW1-6	CFM	1550	1511	1473	1434	1399	1362	1319	1278	1238	1202
				ON	OFF											
			High Stage Cooling	SW1-1	SW1-2	BHP	0.36	0.37	0.38	0.39	0.40	0.41	0.42	0.44	0.45	0.46
				ON	OFF											
			High Stage Heating	SW2-1	SW2-2	Gas Heat Rise (°F)	61	63	64	NA	NA	NA	NA	NA	NA	NA
				ON	OFF	Gas Heat Rise (°C)	34	35	36	NA	NA	NA	NA	NA	NA	NA
		7	Dehumidification High	SW1-5	SW1-6	CFM	1943	1905	1867	1818	1787	1743	1705	1664	1624	1587
				OFF	ON											
			High Stage Cooling*	SW1-1	SW1-2	BHP	0.63	0.64	0.66	0.67	0.68	0.69	0.70	0.71	0.73	0.74
				OFF	ON											
			High Stage Heating	SW2-1	SW2-2	Gas Heat Rise (°F)	49	50	51	52	53	54	55	57	58	60
				OFF	ON	Gas Heat Rise (°C)	27	28	28	29	29	30	31	32	32	33
		8	Dehumidification High	SW1-5	SW1-6	CFM	1936	1901	1864	1831	1798	1767	1736	1702	1670	1633
				ON	ON											
			High Stage Cooling	SW1-1	SW1-2	BHP	0.63	0.64	0.65	0.66	0.68	0.69	0.70	0.71	0.73	0.74
				ON	ON											
			High Stage Heating*	SW2-1	SW2-2	Gas Heat Rise (°F)	49	50	51	52	53	53	54	56	57	58
				ON	ON											
			High Static Cooling	SW2-8		Gas Heat Rise (°C)	27	28	28	29	29	30	30	31	31	32
				OFF												
		9	High Static Cooling	SW2-8		CFM	1966	1933	1903	1872	1842	1811	1782	1751	1718	1619
				ON		BHP	0.67	0.68	0.70	0.71	0.73	0.74	0.75	0.77	0.78	0.74

Shaded areas indicate speed/static combinations that are permitted for dehumidification speed

* - Factory Set Function
** - Deduct field-supplied air filter pressure drop and wet coil pressure drop to obtain external static pressure available for ducting
"NA" = Not Allowed for particular heating speed

Wet Coil Pressure Drop (IN. W.C.)

Unit Size	Standard CFM (SCFM)																	
	500	600	700	800	900	1000	1100	1200	1300	1400	1500	1600	1700	1800	1900	2000	2100	2200
24	0.02	0.03	0.04	0.04	0.05	0.06												
36				0.03	0.04	0.05	0.05	0.06	0.07	0.08	0.08	0.09	0.10	0.11				
48						0.03	0.04	0.04	0.05	0.06	0.06	0.07	0.08	0.09	0.10	0.11	0.12	0.12
60						0.03	0.04	0.04	0.05	0.06	0.06	0.07	0.08	0.09	0.10	0.11	0.12	0.12

Manufacturer reserves the right to change, at any time, specifications and designs without notice and without obligations.

Economizer with 1-in. Filter Pressure Drop (IN. W.C.)

Filter Size in. (mm)	Cooling Tons	Standard CFM (SCFM)																	
		500	600	700	800	900	1000	1100	1200	1300	1400	1500	1600	1700	1800	1900	2000	2100	2200
600-1400 CFM 12x20x1+12x20x1 (305x508x25+305x508x25)	2.0	0.04	0.05	0.07	0.09	0.14	0.16	0.18	0.25	-	-	-	-	-	-	-	-	-	-
1200-1800 CFM 16x24x1+14x24x1 (406x610x25+356x610x25)	3.0	-	-	-	0.04	0.06	0.07	0.08	0.10	0.11	0.12	0.13	0.14	0.16	0.16	-	-	-	-
1500-2200 CFM 16x24x1+18x24x1 (406x610x25+457x610x25)	4.0	-	-	-	-	-	-	0.08	0.10	0.11	0.13	0.15	0.17	0.18	0.20	0.21	0.22	-	-
1500-2200 CFM 16x24x1+18x24x1 (406x610x25+457x610x25)	5.0	-	-	-	-	-	-	0.08	0.10	0.11	0.13	0.15	0.17	0.18	0.20	0.21	0.22	0.23	0.23

Filter Pressure Drop Table (IN. W.C.)

Filter Size in. (mm)	Cooling Tons	Standard CFM (SCFM)																	
		500	600	700	800	900	1000	1100	1200	1300	1400	1500	1600	1700	1800	1900	2000	2100	2200
600-1400 CFM 12x20x1+12x20x1 (305x508x25+305x508x25)	2.0	0.02	0.03	0.05	0.06	0.08	0.10	0.11	0.13	-	-	-	-	-	-	-	-	-	-
1200-1800 CFM 16x24x1+14x24x1 (406x610x25+356x610x25)	3.0	-	-	-	0.03	0.03	0.04	0.05	0.06	0.07	0.08	0.09	0.09	0.10	0.11	-	-	-	-
1500-2200 CFM 16x24x1+18x24x1 (406x610x25+457x610x25)	4.0	-	-	-	-	-	-	0.02	0.03	0.03	0.04	0.04	0.06	0.08	0.10	0.11	0.13	-	-
1500-2200 CFM 16x24x1+18x24x1 (406x610x25+457x610x25)	5.0	-	-	-	-	-	-	0.02	0.03	0.03	0.04	0.04	0.06	0.08	0.10	0.11	0.13	0.14	0.15

Manufacturer reserves the right to change, at any time, specifications and designs without notice and without obligations.

Typical Piping and Wiring

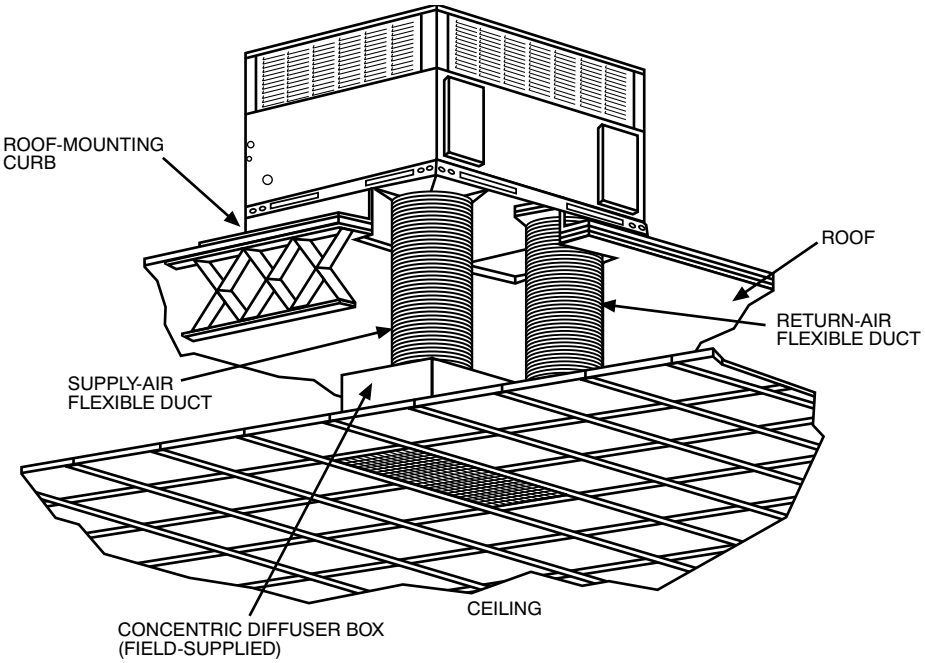

A09233

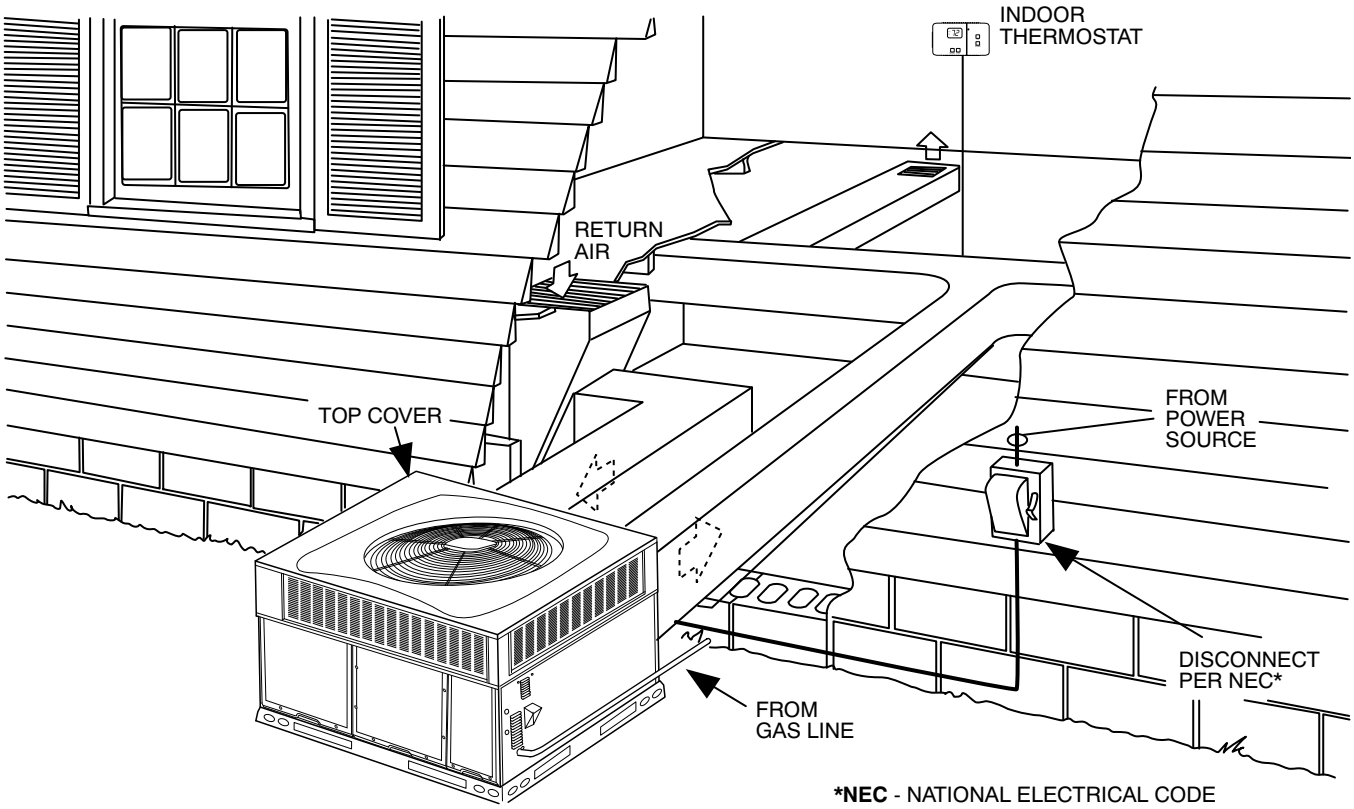

A09234

Application Data

Condensate trap — A 2-in. (50.8 mm) condensate trap must be field supplied.

Ductwork — Secure downflow discharge ductwork to roof curb. For horizontal discharge applications, attach ductwork to unit with flanges.

To convert a unit to downflow discharge — Units are equipped with factory-installed inserts in the down-flow openings. Removal of the inserts is similar to removing an electrical knock-out. Use the duct cover to seal the horizontal discharge openings in the unit. Units installed in horizontal discharge orientation do not require duct covers.

Airflow — Units are draw-thru in the cooling mode and blow-thru in the heating mode.

Maximum cooling airflow — To minimize the possibility of condensate blow-off from the evaporator, airflow through the units should not exceed 450 cfm per ton.

Minimum cooling airflow — Minimum cooling airflow is 350 cfm per ton.

Minimum ambient cooling operation temperature — All standard units have a minimum ambient operating temperature of 40°F (4°C). With accessory low ambient temperature kit, units can operate at temperatures down to 0°F (-17°C).

Minimum temperature — Air entering the heat exchanger in heating mode must be a minimum of 55°F (13°C) continuous and a maximum of 80°F (27°C) continuous.

Electrical Data

MODEL	NOMINAL V-PH-HZ	VOLTAGE RANGE		COMPRESSOR		OFM	IFM	IDM	POWER SUPPLY	
		MIN	MAX	RLA	LRA	FLA	FLA	FLA	MCA	MOCP
24040, 24060	208/230-1-60	197	253	10.9	61	0.6	3.9	0.27	18.1	25
36060, 36090	208/230-1-60	197	253	15.3	83	1.05	6.1	0.27	26.3	40
36060, 36090	208/230-3-60	197	253	11.6	73	1.05	6.1	0.27	21.7	30
48090, 48115, 48130	208/230-1-60	197	253	21.2	104	1.05	7.6	0.27	35.2	50
48090, 48115, 48130	208/230-3-60	197	253	14	83.1	1.05	7.6	0.27	26.2	40
60090, 60115, 60130	208/230-1-60	197	253	28.8	152.9	1.05	7.6	0.27	44.7	60
60090, 60115, 60130	208/230-3-60	197	253	16.2	110	1.05	7.6	0.27	29	40

Manufacturer reserves the right to change, at any time, specifications and designs without notice and without obligations.

Electrical Data (Cont)

LEGEND

FLA - Full Load Amps
IDM - Inducer Motor
IFM - Indoor Fan Motor
LRA -Locked Rotor Amps
MCA - Minimum Circuit Amps
MOCP - Maximum Over Current Protection
OFM - Outdoor Fan Motor
RLA - Rated Load Amps

NOTES:

1. In compliance with NEC (National Electrical Code) requirements for multimotor and combination load equipment (refer to NEC Articles 430 and 440), the overcurrent protective device for the unit shall be Power Supply fuse or circuit breaker.
2. Minimum wire size is based on 60 C copper wire. If other than 60 C wire is used, or if length exceeds wire length in table, determine size from NEC.
3. Unbalanced 3-Phase Supply Voltage
   Never operate a motor where a phase imbalance in supply voltage is greater than 2%. Use the following formula to determine the percentage of voltage imbalance

   % Voltage imbalance

   $$= 100 \times \frac{\text{max voltage deviation from average voltage}}{\text{average voltage}}$$

EXAMPLE: Supply voltage is 230-3-60.

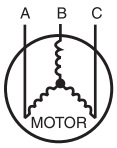

AB = 228 v
BC = 231 v
AC = 227 v

$$\text{Average Voltage} = \frac{228 + 231 + 227}{3} = \frac{686}{3} = 229$$

Determine maximum deviation from average voltage.
(AB) 229 - 228 = 1 v
(BC) 231 - 229 = 2 v
(AC) 229 - 227 = 2 v

Maximum deviation is 2 v.

Determine percent of voltage imbalance

$$\text{\% Voltage Imbalance} = 100 \times \frac{2}{229} = 0.8\%$$

This amount of phase imbalance is satisfactory as it is below the maximum allowable 2%.

IMPORTANT: If the supply voltage phase imbalance is more than 2%, contact your local electric utility company immediately.

Connection Wiring Schematic 208/230-1-60

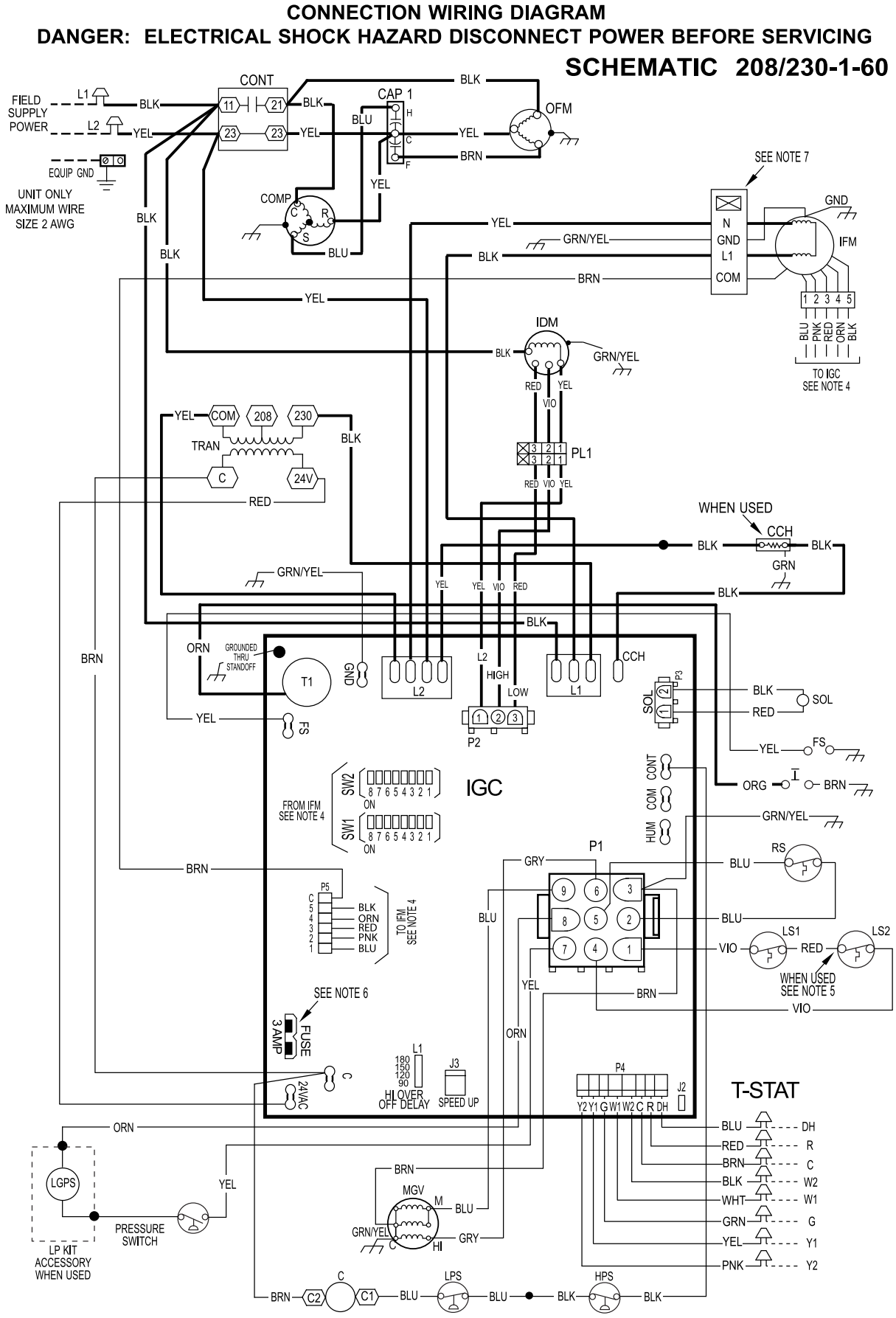

A230125

Ladder Wiring Schematic 208/230-1-60

LADDER WIRING DIAGRAM
DANGER: ELECTRICAL SHOCK HAZARD DISCONNECT POWER BEFORE SERVICING

LEGEND

△	FIELD SPLICE	EQUIP	EQUIPMENT
⬭	TERMINAL (MARKED)	FS	FLAME SENSOR
○	TERMINAL (UNMARKED)	GND	GROUND
●	SPLICE	HPS	HIGH PRESSURE SWITCH
⬡	SPLICE (MARKED)	I	IGNITOR
——	FACTORY LO VOLTAGE	IDM	INDUCED DRAFT MOTOR
– –	FIELD CONTROL WIRING	IFM	INDOOR FAN MOTOR
—–	FIELD POWER WIRING	IGC	INTERGRATED GAS UNIT CONTROLLER
– – –	ACCESSORY OR OPTIONAL WIRING	LGPS	LOW GAS PRESSURE SWITCH (WHEN USED)
▬	FACTORY HI VOLTAGE	LPS	LOW PRESSURE SWITCH
C	CONTACTOR	LS1	PRIMARY LIMIT SWITCH
CAP1	CAPACITOR, COMP	LS2	SECONDARY LIMIT SWITCH
CAP2	CAPACITOR, INDUCER	MGV	MAIN GAS VALVE
CCH	CRANKCASE HEATER	OFM	OUTDOOR FAN MOTOR
COMP	COMPRESSOR MOTOR	OT	QUADRUPLE TERMINAL
		PL1	IGC TO INDUCER MOTOR PLUG
		PL2	INDUCER MOTOR PLUG
		RS	ROLLOUT SWITCH
		SOL	COMPRESSOR SOLENOID
		TRAN	TRANSFORMER
		T-STAT	THERMOSTAT

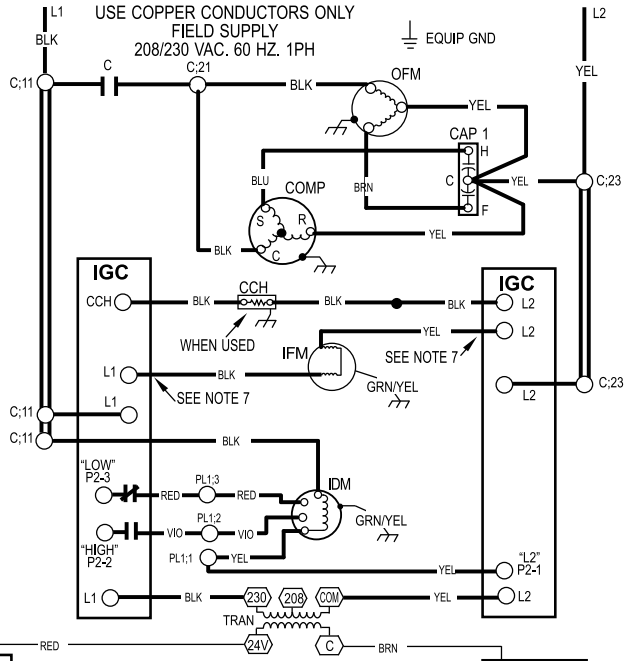

1Ø UNIT COMPONENT ARRANGEMENT

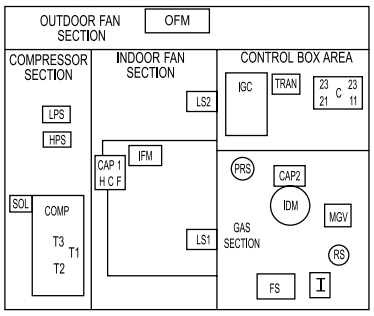

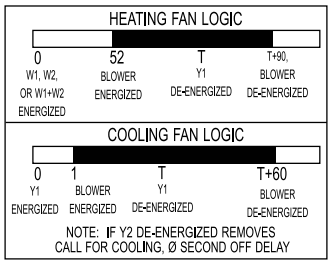

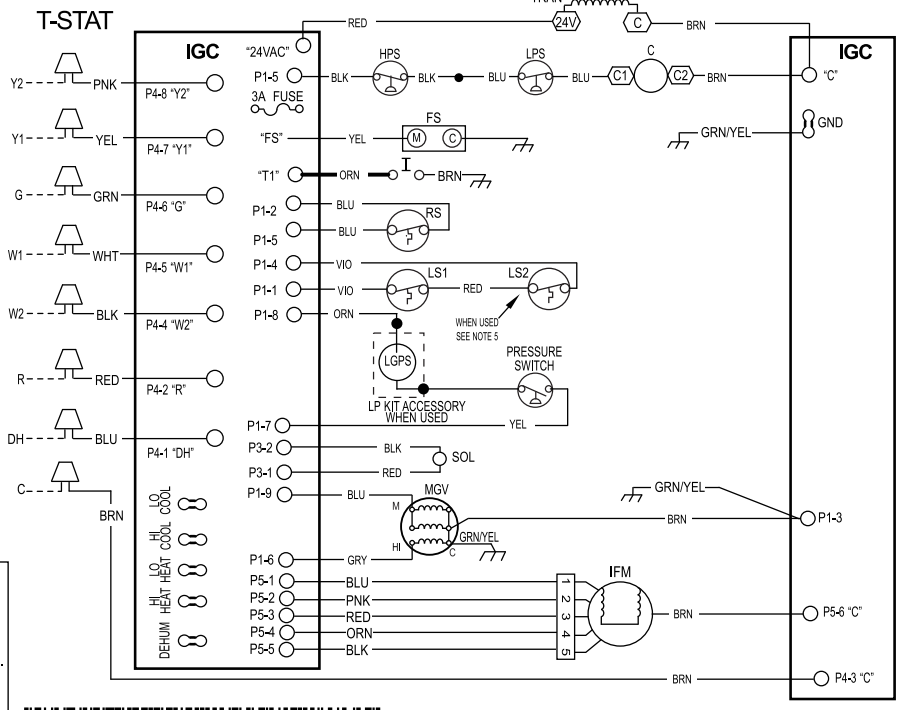

NOTES:

1. IF ANY OF THE ORIGINAL WIRES FURNISHED ARE REPLACED THEY MUST BE REPLACED WITH THE SAME WIRE OR IT'S EQUIVALENT.
2. SEE PRE-SALE LITERATURE FOR THERMOSTATS.
3. USE 75 DEGREES C COPPER CONDUCTORS FOR FIELD INSTALLATION.
4. REFER TO INSTALLATION INSTRUCTIONS FOR CORRECT SPEED SELECTIONS FOR HEATING AND COOLING ON YOUR UNIT
5. ON SOME MODELS LS1 AND LS2 ARE WIRED IN SERIES. ON OTHER MODELS ONLY LS1 IS USED.
6. THIS FUSE IS MANUFACTURED BY LITTLE FUSE, P/N 257003.
7. DO NOT DISCONNECT PLUG UNDER LOAD.
8. N.E.C. CLASS 2, 24V.

349619–701 REV. A

349619-701 REV. A

A230126

Connection Wiring Schematic Gas Inputs 208/230-3-60

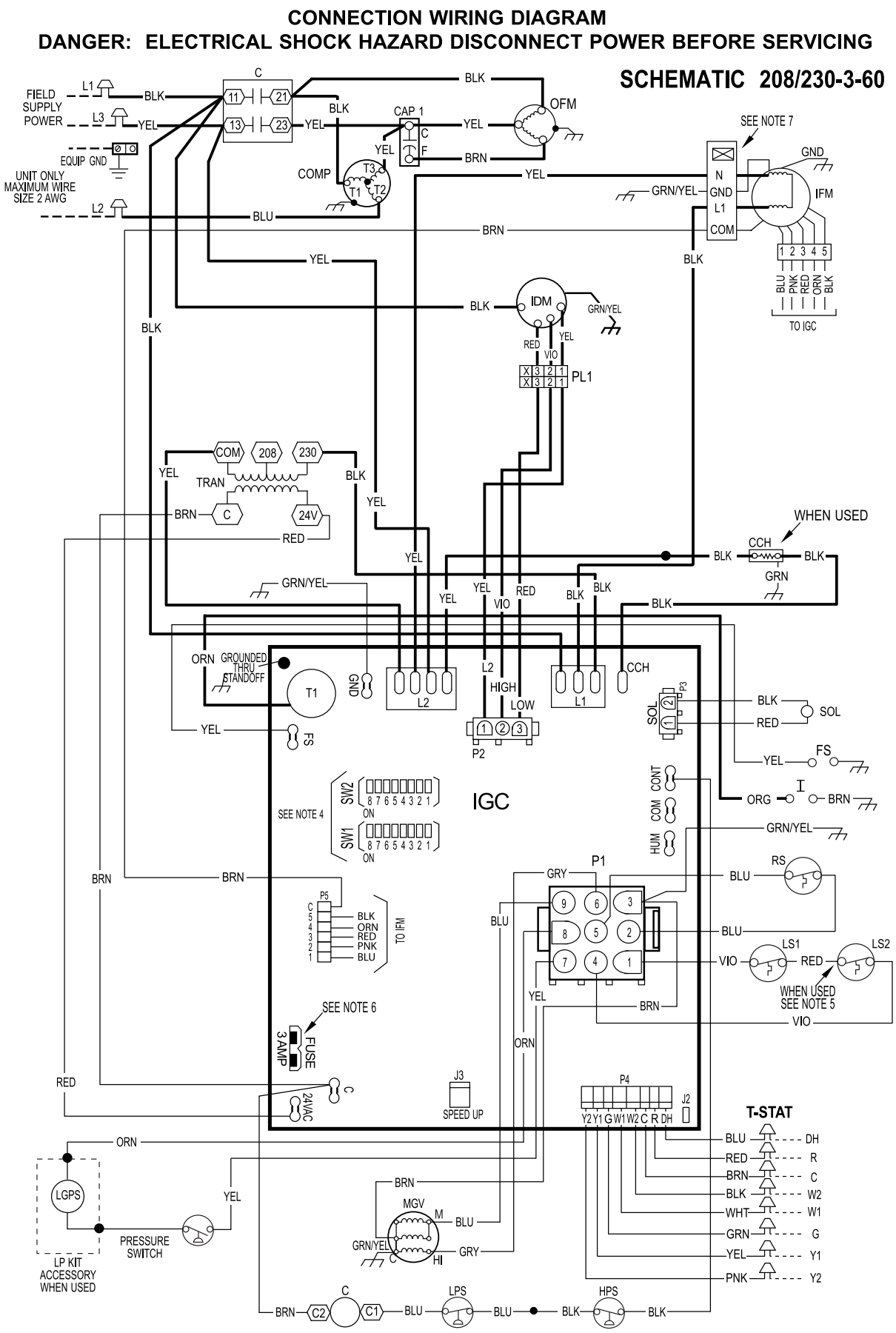

A230123

Ladder Wiring Schematic Gas Inputs 208/230-3-60

LADDER WIRING DIAGRAM
DANGER: ELECTRICAL SHOCK HAZARD DISCONNECT POWER BEFORE SERVICING

LEGEND

	FIELD SPLICE
	TERMINAL (MARKED)
	TERMINAL (UNMARKED)
	SPLICE
	SPLICE (MARKED)
	FACTORY LO VOLTAGE
	FIELD CONTROL WIRING
	FIELD POWER WIRING
	ACCESSORY OR OPTIONAL WIRING
	FACTORY HI VOLTAGE
C	CONTACTOR
CAP1	CAPACITOR, COMP
CAP2	CAPACITOR, INDUCER
CCH	CRANKCASE HEATER
COMP	COMPRESSOR MOTOR
EQUIP	EQUIPMENT
FS	FLAME SENSOR
GND	GROUND
HPS	HIGH PRESSURE SWITCH
I	IGNITOR
IDM	INDUCED DRAFT MOTOR
IDR	INDUCER RELAY
IFM	INDOOR FAN MOTOR
IGC	INTERGRATED GAS UNIT CONTROLLER
LGPS	LOW GAS PRESSURE SWITCH (WHEN USED)
LPS	LOW PRESSURE SWITCH
LS1	PRIMARY LIMIT SWITCH
LS2	SECONDARY LIMIT SWITCH
MGV	MAIN GAS VALVE
OFM	OUTDOOR FAN MOTOR
OT	QUADRUPLE TERMINAL
PL1	IGC TO INDUCER MOTOR PLUG
PL2	INDUCER MOTOR PLUG
RS	ROLLOUT SWITCH
SOL	COMPRESSOR SOLENOID
TRAN	TRANSFORMER
T-STAT	THERMOSTAT

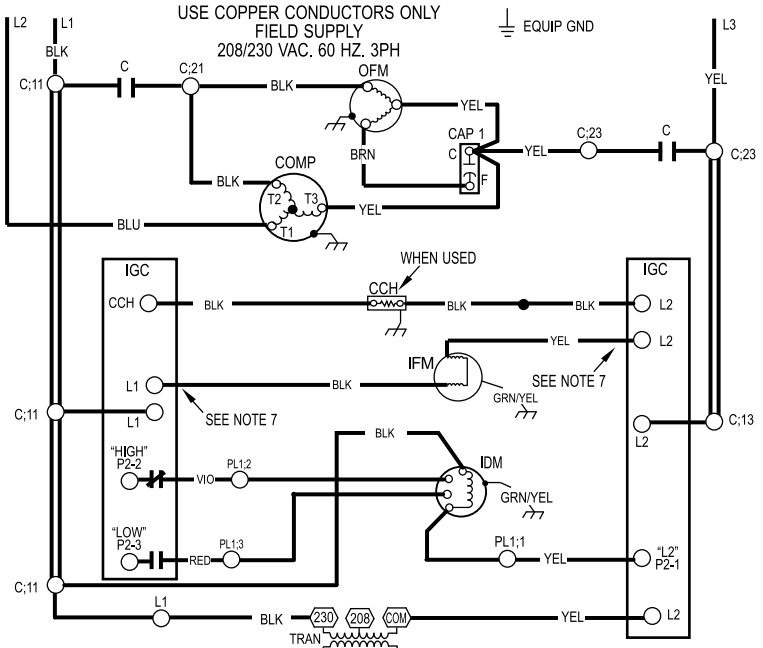

3Ø UNIT COMPONENT ARRANGEMENT

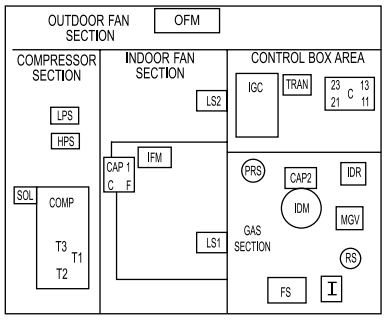

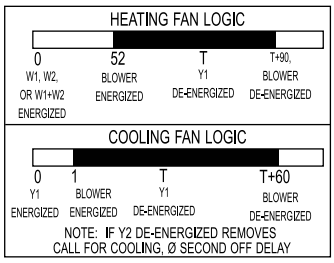

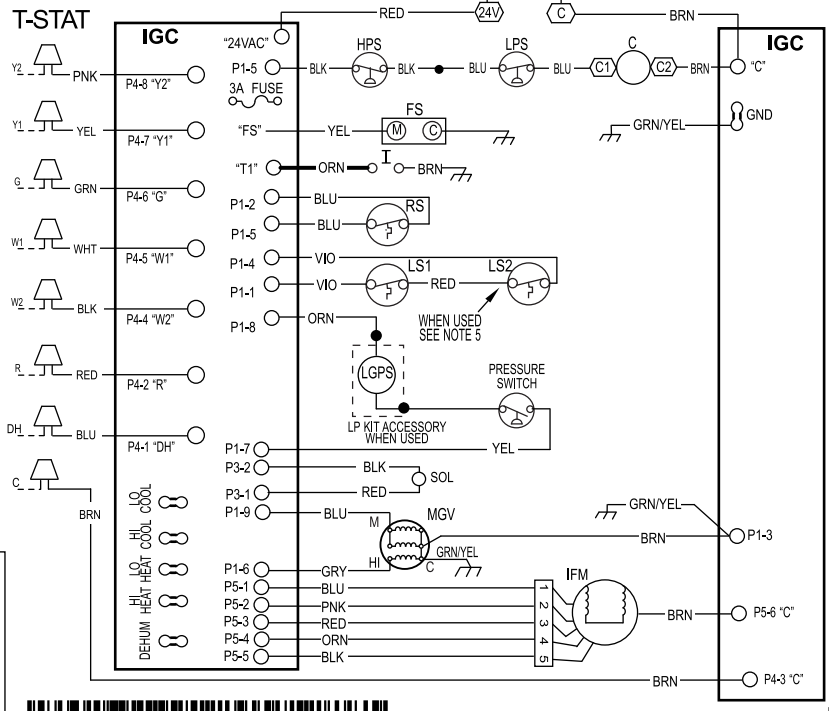

NOTES:

1. IF ANY OF THE ORIGINAL WIRES FURNISHED ARE REPLACED THEY MUST BE REPLACED WITH THE SAME WIRE OR IT'S EQUIVALENT.
2. SEE PRE-SALE LITERATURE FOR THERMOSTATS.
3. USE 75 DEGREES C COPPER CONDUCTORS FOR FIELD INSTALLATION.
4. REFER TO INSTALLATION INSTRUCTIONS FOR CORRECT SPEED SELECTIONS FOR HEATING AND COOLING OF YOUR UNIT.
5. ON SOME MODELS LS1 AND LS2 ARE WIRED IN SERIES. ON OTHER MODELS ONLY LS1 IS USED.
6. THIS FUSE IS MANUFACTURED BY LITTLE FUSE, P/N 257003.
7. DO NOT DISCONNECT PLUG UNDER LOAD.
8. N.E.C. CLASS 2, 24V.

349618−701 REV. A

349618-701 REV. A

A230124

Controls

Operating sequence

208/230 VAC Models:

On a call for low stage heating, terminal W1 on the thermostat is energized. On a call for high stage heating both terminals W1 and W2 are energized. Regardless of the stage of the heating call, the induced-draft motor is turned on to high speed for a 15 sec pre-purge time. After the pre-purge, when the pressure switch senses that sufficient combustion air is being moved by the induced-draft motor, the ignition sequence begins. The IGC will energize the sparker and the low stage gas valve solenoid. Upon sensing flame, the IGC will check the heating call. If W2 is not energized, the IGC will drop the induced-draft motor to low speed and maintain the gas valve on low stage. If W2 is energized, the IGC will maintain the induced-draft motor on high speed and energize the high stage gas valve solenoid. Thirty sec after flame is sensed the IGC will turn on the evaporator fan motor. If W2 is not energized, the evaporator fan motor will run on low heat speed. If W2 is energized, the evaporator fan motor will run on high heat speed. After the call for heat is satisfied, the IGC will run the evaporator fan motor an additional 90 sec. Please note that the IGC has the capability to automatically reduce the indoor fan motor on delay and increase the fan motor off delay in the event of high duct static and/or a partially-clogged filter.

Cooling — When the system thermostat calls for cooling, 24 V is supplied to the “Y1/Y” and “G” terminals of the thermostat. This completes the circuit to the contactor coil (C) and indoor (evaporator) fan relay (IFR). The normally open contacts of energized C close and complete the circuit through compressor motor (COMP) to outdoor (condenser) fan motor (OFM). Both motors start instantly. The set of normally open contacts of energized IFR close and complete the circuit through IFM. The IFM starts instantly.

On the loss of the thermostat call for cooling, 24 V is removed from both the “Y1/Y” and “G” terminals (provided the fan switch is in the “AUTO” position) de-energizing the compressor contactor and opening the contacts supplying power to compressor/OFM. After a 60-second delay, the IFM shuts off. If the thermostat fan selector switch is in the “ON” position, the IFM will run continuously.

NOTE: On units with a compressor delay device: Once the compressor has started and then stopped, it cannot be restarted again until 5 minutes have elapsed.

Guide Specifications

Packaged Gas Heating/Electric Cooling Units Constant Volume Application

HVAC Guide Specifications

Size Range: **2 to 5 Tons, Nominal Cooling**
40,000 to 130,000 Btuh,
Nominal Heating Input

SYSTEM DESCRIPTION

Outdoor rooftop or ground mounted air conditioner and gas furnace system utilizing a two-stage scroll compressor for cooling duty. Unit shall discharge supply air vertically or horizontally as shown on contract drawings. Outdoor fan/coil section shall have a draw-thru design with vertical discharge for minimum sound levels.

QUALITY ASSURANCE

- Unit shall be rated in accordance with AHRI Standards 210/240 and 270-1995.
- Unit shall be designed in accordance with UL Standard 1995 and ANSI Z 21.47.
- Unit shall be manufactured in a facility registered to ISO 9001 manufacturing quality standard.
- Unit shall be UL listed and c-UL certified as a total package for safety requirements.
- Roof curb shall be designed to conform to NRCA Standards.
- Insulation and adhesives shall meet NFPA 90.1 requirements for flame spread and smoke generation.
- Cabinet insulation shall meet ASHRAE Standard 62.2.

DELIVERY, STORAGE AND HANDLING

Unit shall be stored and handled per manufacturer's recommendations.

Part 2 — Products

EQUIPMENT

General:

Factory-assembled, single-piece, heating and cooling unit. Contained within the enclosure shall be all factory wiring, piping, controls, refrigerant charge with R-410A refrigerant, and special features required prior to field start-up.

Unit Cabinet:

1. Unit cabinet shall be constructed of phosphated, zinc-coated, pre-painted steel capable of with-standing 500 hours in salt spray.
2. Normal service shall be through 3 removable cabinet panels.
3. The unit shall be constructed on a rust proof unit base that has an externally trapped, integrated sloped drain.
4. Evaporator fan compartment top surface shall be insulated with a minimum 1/2-in. (12.7 mm) thick, flexible fiberglass insulation, coated on the air side and retained by adhesive and mechanical means. The evaporator wall sections will be insulated with a minimum semi-rigid foil-faced board capable of being wiped clean. Aluminum foil-faced fiberglass insulation shall be used in the entire indoor air cavity section.
5. Unit shall have a field-supplied condensate trap.

Fans:

1. The evaporator fan shall be a multi-speed, direct-drive, as shown on equipment drawings.
2. Fan wheel shall be made from steel, be double-inlet type with forward curved blades with corrosion resistant finish. Fan wheel shall be dynamically balanced.
3. Condenser fan shall be direct drive propeller type with aluminum blades riveted to corrosion resistant steel spiders, be dynamically balanced, and discharge air vertically.

Compressor:

1. Fully hermetic compressors with factory-installed vibration isolation.
2. Two-stage scroll compressors shall be standard on all units.

Coils:

Aluminum tubes on indoor coil. Copper tubes on outdoor coil.

Heating Section:

1. Induced-draft combustion type with energy saving direct spark ignition system and redundant main gas valve.
2. Induced-draft motors shall provide adequate airflow for combustion.
3. The heat exchangers shall be constructed of aluminized steel for corrosion resistance.
4. Burners shall be of the in-shot type constructed of aluminum coated steel.
5. All gas piping and electric power shall enter the unit cabinet at a single location.

Refrigerant Components:

Refrigerant expansion device shall be of the TXV (thermostatic expansion valve) type.

Filters:

Filter section shall consist of field-installed, throwaway, 1-in. (25 mm) thick fiberglass filters of commercially available sizes.

Controls and Safeties:

1. Unit controls shall be complete with a self-contained low voltage control circuit.
2. Compressors shall incorporate a solid-state compressor protector that provides reset capability.

Operating Characteristics:

1. Unit shall be capable of starting and running at 125°F (51°C) ambient outdoor temperature per maximum load criteria of AHRI Standard 210.
2. Compressor with standard controls shall be capable of operation down to 40°F (4°C) ambient outdoor temperature.
3. Units shall be provided with fan time delay to prevent cold air delivery before the heat exchanger warms up.
4. Unit shall be provided with fan time delay after the thermostat is satisfied.

Electrical Requirements:

All unit power wiring shall enter the unit cabinet at a single location.

Motors:

1. Compressor motors shall be of the refrigerant-cooled type with line-break thermal and current overload protection.
2. All fan motors shall have permanently lubricated bearings, and inherent, automatic reset, thermal overload protection.
3. Condenser fan motor shall be totally enclosed.
4. Evaporator Fan Motor to be multi-speed ECM blower motor.

Compressor Protection:

Solid-state control shall protect compressor by preventing "short cycling."

Low NOx:

Shall provide NOx reduction to meet 40 ng/J NOx emissions requirements as shipped from the factory.

Manufacturer reserves the right to change, at any time, specifications and designs without notice and without obligations.

Guide Specifications (cont)

O.Special Option/Kits Available:

1. Compressor Start Kit (single phase units only):
   Shall provide additional starting torque for single-phase compressors.
2. Corporate Thermostat:
   To provide for one-stage heating and cooling in addition manual or automatic changeover and indoor fan control.
3. Crankcase Heater Kit:
   Shall provide anti-floodback protection for low-load cooling applications.
4. Economizer for two-stage operation:
   (Horizontal and Vertical with Jade Honeywell W7220 controller, Honeywell communicating actuator, and dry bulb sensor. (Contact MicroMetl Customer Service at 1-800-662-4822 to order.)

NOTE: The enhanced dehumidification feature on high stage cooling does not support use of an economizer.

   a. Economizer controls capable of providing free cooling using outside air.
   b. Equipped with low leakage dampers not to exceed 3% leakage, at 1.0 IN. W.C. pressure differential.
   c. Spring return motor shuts off outdoor damper on power failure.

5. Filter Rack Kit:
   Shall provide filter mounting for downflow applications. Offered as a field installed accessory.
6. Flat Roof Curb Kit:
   Curbs shall have seal strip and a wood nailer for flashing and shall be installed per manufacturer's instructions.
7. Flue Discharge Deflector Kit
   Directs flue gas exhaust; 90 degrees upward from current discharge.
8. High Altitude Propane Conversion Kit:
   Shall consist of all required hardware to convert to propane gas heat operation at 2001 to 6000 ft (611 to 1829 m) above sea level.
9. Low Ambient Package Kit:
   Shall consist of a solid-state control and condenser coil temperature sensor for controlling condenser-fan motor operation, which shall allow unit to operate down to 0°F (-18°C) outdoor ambient temperature when properly installed.
10. Manual Outdoor Air Damper Kit:
    Package shall consist of damper, birdscreen, and rainhood which can be preset to admit outdoor air for year-round ventilation.
11. Natural-to-Propane Conversion Kit:
    Shall be complete with all required hardware to convert to propane gas operation at 10.0 IN. W.C. manifold pressure.
12. Propane-to-Natural Conversion Kit
    Shall be complete with all hardware to convert to natural gas at standard altitude (0 to 2000 ft [0 to 610 m] above sea level).
13. Cabinet air leakage of 2.0% or less at .5 in. W.C. when tested in accordance with ASHRAE standard 193. A.
14. Square-To-Round Duct Transitions Kit (24-48 models):

© 2023 Carrier. All rights reserved.

Manufacturer reserves the right to change, at any time, specifications and designs without notice and without obligations.