Container Refrigeration

PARTS LIST MANUAL

For

69NT40-601-100 to 199

Container Refrigeration Units

T-370PL Rev F

PARTS LIST MANUAL

For

69NT40-601-100 to 199

Container Refrigeration Units

© Carrier Corporation, 2024 Printed in U. S. A. July 2024

Table of Contents

PARAGRAPH NUMBER		PAGE
1.1	Introduction	1
1.2	Configuration Identification	1
1.3	Ordering Instructions	1
1.4	Letter Designations	1
1.5	Quick Parts Reference	2
1.6	Refrigeration Unit Component Sections	4
2	Upper Air Exchange Kit, VPS Provision or Installed	6
3	Bulk Head Assembly	8
4	Evaporator Access Panel	9
5	Compressor (PIDs NT5000, NT5001, NT5002, NT5003, NT5004, NT5010, NT5011, NT5103)	10
6	Compressor (PID NT5103)	14
7	Compressor Tubing (PIDs NT5000, NT5001, NT5002, NT5003, NT5004)	16
7	Compressor Tubing (PIDs NT5010, NT5011)	20
7	Compressor Tubing (PID NT5103)	24
8	Gas Cooler Assembly, No WCC (PIDs NT5000, NT5001, NT5003, NT5004)	28
8	Gas Cooler Assembly, No WCC (PIDs NT5010, NT5011)	34
8	Gas Cooler Assembly, No WCC (PID NT5103)	40
8	Gas Cooler / Condenser Assembly, with WCC (PID NT5002)	44
9	Gas Cooler / Condenser Fan and Motor	50
10	Evaporator Tubing and Coil (PIDs NT5000, NT5001, NT5002, NT5003, NT5004)	52
10	Evaporator Tubing and Coil (PIDs NT5010, NT5011, NT5103)	54
11	Evaporator Fan and Motor (PIDs NT5000, NT5001, NT5002, NT5003)	56
11	Evaporator Fan and Motor (PIDs NT5004, NT5010, NT5011, NT5103)	58
12	Drain Kit	60
13	Heater Kit	61
14	Humidity Kit	62
15	USDA Section	63
16	Frame Kit	64
17	Frame Assembly	66
18	Control Box Assembly	70
19	Control Box Hardware Kit	72
20	Controller Kit (PIDs NT5000, NT5001, NT5002, NT5003, NT5004)	74
20	Controller Kit (PIDs NT5010, NT5011)	76
20	Controller Kit (PID NT5103)	80
21	Control Box Door Assembly (PIDs NT5000, NT5001, NT5002, NT5003)	84
21	Control Box Door Assembly (PIDs NT5004, NT5010, NT5011, NT5103)	88
22	RMU Kit (NT5000, NT5003, NT5004, NT5010, NT5011, NT5103)	92
22	RMU Kit (PIDs NT5001, NT5002)	93
23	Panel Kit	94
24	Interrogator Kit	95
25	Plate Assembly	96
26	Wiring Kit	98
27	Wire Harness, Low Voltage	100
28	Wire Harness, High Voltage	112
29	Power Cord and Plug	114
30	Cable Kit	115

31 Cable Restraint 116
32 Labels 118
33 Back Panel Assembly 120
34 Handle Kit (Without Handles) 122
35 Vacuum Valve Assembly 123

Section 1
Introduction

1.1 Introduction

The Carrier Transicold model 69NT40-601 series units are of lightweight aluminum frame construction, designed to fit in the front of a container and serve as the container's front wall. They are one piece, self-contained, all electric units, which include cooling and heating systems to provide precise temperature control.

The units are supplied with a complete charge of refrigerant R-744 (CO2) and compressor lubricating oil, units are ready for operation upon installation.

The base unit operates on nominal 380/460 volt, 3-phase, 50/60 hertz (Hz) power. Power for the control system is provided by a transformer which steps the supply power down to 18 and 24 volts, single phase.

The controller is a Carrier Transicold Micro-Link 3 microprocessor (unique unit part number 12-55010). The controller will operate automatically to select cooling, holding or heating as required to maintain the desired set point temperature. The controller has a keypad and display for viewing or changing operating parameters. The display is also equipped with lights to indicate various modes of operation.

1.2 Configuration Identification

Unit information is provided on an identification plate located to the right of the compressor, on the back wall of the Variable Frequency Drive (VFD) section. The identification plate provides the unit model number, the unit serial number and the unit parts identification number (PID). The model number (69NT40-601-1xx) identifies the overall unit configuration, while the PID number provides information on specific optional equipment, factory provisioned to allow for field installation of optional equipment, and differences in detailed parts.

1.3 Ordering Instructions

All orders and inquiries for parts must include: Parts Identification Number (PID), Model Number, Unit Serial Number, Part Number, Description of part as shown on list and quantity required.

For parts ordering and inquiries, go to the Contact Us page on the Carrier Container website:

https://www.carrier.com/container-refrigeration/en/worldwide/locator/contact-us/

1.4 Letter Designations

The following letter designations are used to classify parts throughout this list:

A/R = As Required

N/A = Not Available

NS = Not Shown in illustration

NSS = Not Sold Separately - order next higher assembly or kit

PID = Parts Identification Number - essential to identify unit configuration.

PL = Purchase Locally

SST = Stainless Steel - 300 Series unless otherwise specified.

SV = Suffix SV - added to part number designates service replacement part.

1.5 Quick Parts Reference

Part Number	Description	PIDs
12-00495-00	Ambient Temperature Sensor (AMBS)	All
30-50377-00	Battery Pack, DataCorder	All
79-04172-23	Compressor	All
12-00726-20	Compressor Discharge Temperature Sensor (CPDS)	All
12-55013	Controller (ML3)	All
12-00495-01	Defrost Temperature Sensor (DTS)	All
76-00892-07	Discharge Pressure Transducer (DPT)	NT5000, NT5001, NT5002, NT5003, NT5004
12-00887-03	Discharge Pressure Transducer (DPT), Brazed In	NT5010, NT5011, NT5103
12-00433-09RP	Display Module	All
07-00593-00	Dye, Leak Detection, 14.5 ml	All
14-00394-01	Economizer Solenoid Valve (ESV)	All
14-00394-20	Economizer Solenoid Valve (ESV) - Coil	All
14-00382-00	Electronic Expansion Valve (EEV)	All
81-04131-00	Evaporator Coil Assembly	NT5000, NT5001, NT5002, NT5003, NT5004, NT5010, NT5011
81-04359-00	Evaporator Coil Assembly	NT5103
24-00006-20	Evaporator Coil Heater	All
38-00626-00	Evaporator Fan	All
54-00648-20	Evaporator Fan Motor (EM1, EM2)	All
76-66683-00	Evaporator Stator and Stator Ring Kit	NT5004, NT5010, NT5011, NT5103
12-00500-01SV	Evaporator Temperature Sensor (ETS1 / ETS2)	All
14-00406-01	Filter Drier	All
65-00214-00	Flash Tank (Receiver Assembly)	All
76-00892-01	Flash Tank Pressure Relief Valve (FTPRV)	NT5000, NT5001, NT5002, NT5003, NT5004
76-66685-01	Flash Tank Pressure Relief Valve (FTPRV)	NT5010, NT5011, NT5103
76-00892-07	Flash Tank Pressure Transducer (FPT)	NT5000, NT5001, NT5002, NT5003, NT5004
12-00887-03	Flash Tank Pressure Transducer (FPT), Brazed In	NT5010, NT5011, NT5103
81-04258-20	Gas Cooler (Condenser) Coil	All
79-04206-00	Gas Cooler (Condenser) Coil Cover	All
38-00639-01	Gas Cooler (Condenser) Fan	All
54-00677-20	Gas Cooler (Condenser) Motor	All
12-00500-01SV	Gas Cooler Temperature Sensor (GCTS)	All
12-00170-08	Heat Termination Thermostat (HTT)	All
14-00396-10	High Pressure Expansion Valve (HPXV) - Coil	All
14-00396-00	High Pressure Expansion Valve (HPXV) - Valve	All

Part Number	Description	PIDs
76-00892-08	High Pressure Switch (HPS)	All
76-00892-02	High Side Pressure Relief Valve (HPRV)	NT5000, NT5001, NT5002, NT5003, NT5004
76-66685-02	High Side Pressure Relief Valve (HPRV), Hoerbiger	NT5010, NT5011, NT5103
76-00892-04	High Side Service Valve	NT5000, NT5001, NT5002, NT5003, NT5004
40-00801-01	High Side Service Valve, Brazed In	NT5010, NT5011, NT5103
76-00675-04	Humidity Sensor (HS) Assembly Kit, Includes 76-66694-00	All
76-66694-00	Humidity Sensor (HS) Kit, Sensor and Bracket only	All
79-66669-04	Key Pad Assembly	All
76-00892-00	Low Side Pressure Relief Valve (LPRV)	NT5000, NT5001, NT5002, NT5003, NT5004
76-66685-00	Low Side Pressure Relief Valve (LPRV)	NT5010, NT5011, NT5103
76-00892-05	Low Side Service Valve	NT5000, NT5001, NT5002, NT5003, NT5004
40-00801-01	Low Side Service Valve, Brazed In	NT5010, NT5011, NT5103
12-00500-01SV	Return Recorder Sensor (RRS)	All
12-00500-01SV	Return Temperature Sensor (RTS)	All
12-00573-00SV	RMU Module	All
07-00582-00	Service Gauges	All
76-00892-06	Suction Pressure Transducer (SPT)	NT5000, NT5001, NT5002, NT5003, NT5004
12-00887-02	Suction Pressure Transducer (SPT), Brazed In	NT5010, NT5011, NT5103
12-00395-01SV	Supply Recorder Sensor (SRS)	All
12-00395-01SV	Supply Temperature Sensor (STS)	All
14-00394-01	Unloader Solenoid Valve (USV)	All
14-00394-20	Unloader Solenoid Valve (USV) - Coil	All
79-66779-00	Upper Air Exchange Panel Assembly, VPS Installed	All
79-04207-00	Upper Air Exchange Panel Assembly, VPS Provision	All
40-66616-00	Vacuum Relief Valve	All
10-00482-00	Variable Frequency Drive (VFD)	NT5000, NT5001, NT5002, NT5003, NT5004, NT5010, NT5011
10-00482-20SV	Variable Frequency Drive (VFD), Fan	NT5000, NT5001, NT5002, NT5003, NT5004, NT5010, NT5011
10-00560-01	Variable Frequency Drive (VFD)	NT5103
76-00932-00	Variable Frequency Drive (VFD), Fan	NT5103
79-66778-00	Vent Position Sensor (VPS)	All
79-04180-20	Water Cooled Condenser (WCC)	All
12-01071-02	Water Cooled Condenser (WCC), Pressure Switch	All

1.6 Refrigeration Unit Component Sections

Section	Description
Air Exchange	
Section 2	Upper Air Exchange, VPS Provision or Installed
Section 3	Upper Air Exchange, Bulk Head Assembly
Section 4	Evaporator Access Panel
Compressor Section	
Section 5	Compressor (PIDs NT5000, NT5001, NT5002, NT5003, NT5004, NT5010, NT5011)
Section 6	Compressor (PID NT5103)
Section 7	Compressor Tubing (PIDs NT5000, NT5001, NT5002, NT5003, NT5004)
Section 7	Compressor Tubing (PIDs NT5010, NT5011)
Section 7	Compressor Tubing (PID NT5103)
Gas Cooler / Condenser Section	
Section 8	Gas Cooler Assembly (PIDs NT5000, NT5001, NT5003, NT5004)
Section 8	Gas Cooler Assembly (PIDs NT5010, NT5011)
Section 8	Gas Cooler Assembly (PID NT5103)
Section 8	Gas Cooler Assembly, with Water Cooled Condenser (PID NT5002)
Section 9	Gas Cooler Fan and Motor
Evaporator Section	
Section 10	Evaporator Tubing and Coil (PIDs NT5000, NT5001, NT5002, NT5003, NT5004)
Section 10	Evaporator Tubing and Coil (PIDs NT5010, NT5011, NT5103)
Section 11	Evaporator Fan and Motor (PIDs NT5000, NT5001, NT5002, NT5003)
Section 11	Evaporator Fan and Motor (PIDs NT5004, NT5010, NT5011, NT5103)
Section 12	Drain Kit
Section 13	Heater Kit
Section 14	Humidity Kit
Section 15	USDA Section
Frame and Panels	
Section 16	Frame Kit
Section 17	Frame Assembly

Section	Description
Control Box / Controller	
Section 18	Control Box Assembly
Section 19	Control Box Hardware Kit
Section 20	Controller Kit (PIDs NT5000, NT5001, NT5002, NT5003, NT5004)
Section 20	Controller Kit (PIDs NT5010, NT5011)
Section 20	Controller Kit (PID NT5103)
Section 21	Control Box Door Assembly (PIDs NT5000, NT5001, NT5002, NT5003)
Section 21	Control Box Door Assembly (PIDs NT5004, NT5010, NT5011, NT5103)
Section 22	RMU Kit (PIDs NT5000, NT5003, NT5004, NT5010, NT5011, NT5103)
Section 22	RMU Kit (PIDs NT5001, NT5002)
Section 23	Panel Kit
Section 24	Interrogator Kit
Section 25	Plate Assembly
Electrical and Cables	
Section 26	Wiring Kit
Section 27	Wire Harness, Low Voltage
Section 28	Wire Harness, High Voltage
Section 29	Cable Assembly
Section 30	Cable Kit
Section 31	Cable Restraint
Convenience Features	
Section 32	Labels and Decals
Section 33	Back Panel Kit
Section 34	Handle Kit
Section 35	Vacuum Valve Assembly

2 Upper Air Exchange Kit, VPS Provision or Installed

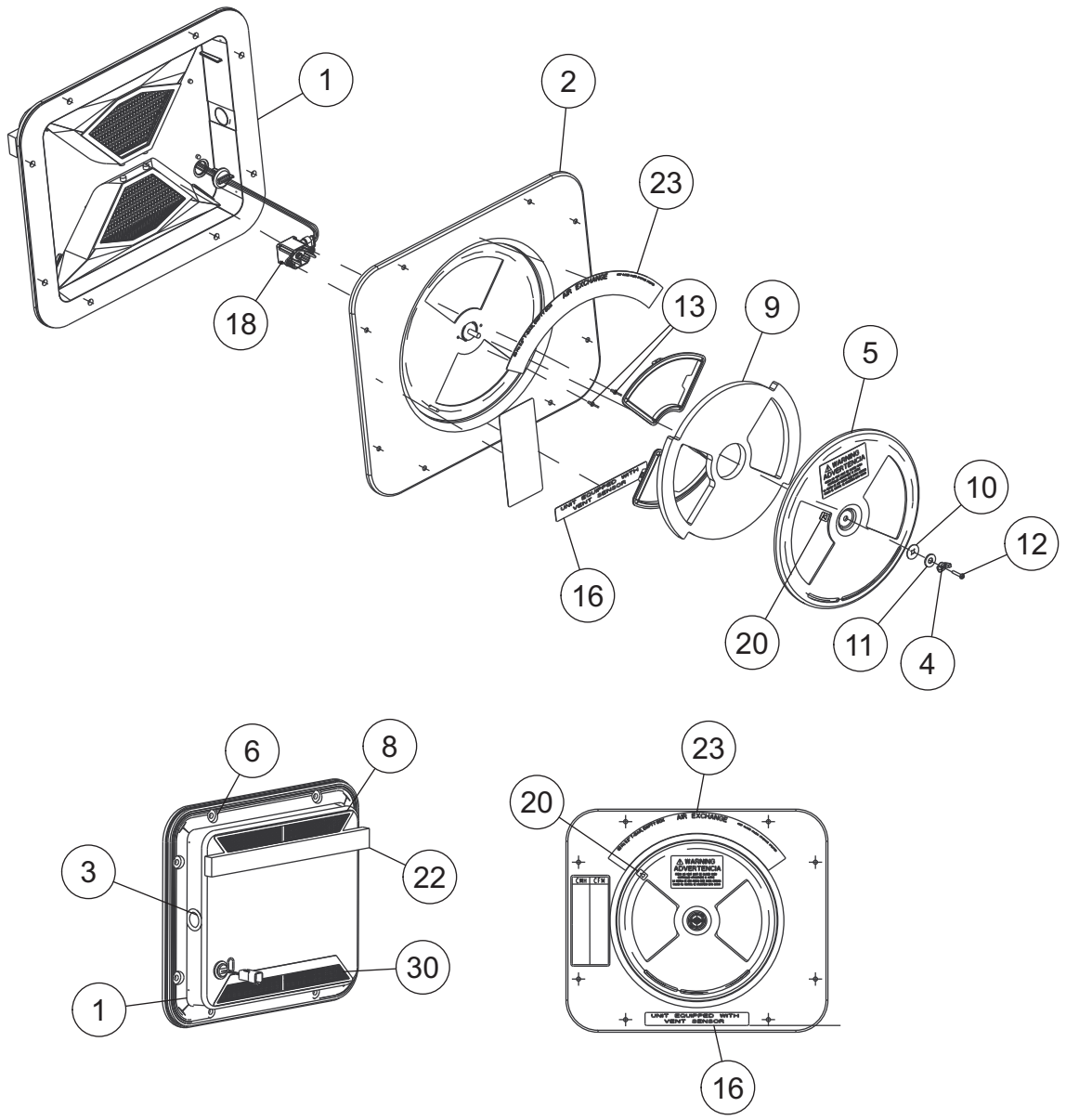

Item	Part Number	Description	Qty
	79-66779-00	Access Panel Assembly - Includes:	1
	79-66779-04	Access Panel Assembly with Medfly Screen- Includes:	1
1	79-66771-01	Access Panel Assembly	NSS
2	68-12940-05	Cover	1
3	66-U---1--5562-2	Plug, Button	1
4	66-U---1--5362-2	Nut, Wing	1
5	68-12933-07	Disc	1
6	42-00296-01	Gasket	1
8	42-00327-00	Gasket	1
9	42-00407-00	Gasket	1

2 Upper Air Exchange Kit, VPS Provision or Installed			
10	34-06053-19	Washer, Retaining	1
11	66-U---1--5321-13	Washer, Plain	1
12	34-06185-01	Screw, Mach Pnhd	1
13	34-00928-20	Rivet, Blind	2
16	62-10930-00	Label	1
18	79-66778-00	Vent Position Sensor (VPS) Kit - Includes:	1
	12-00847-00	Sensor	1
	58-66699-00	Plate, VPS	1
20	66CH---1--1002-33	Label	1
22	66-U---1--2552-185	Gasket	1
23	62-02723-15	Label	1
30	58-04251-00	Screen, Medlfy	1

3 Bulk Head Assembly

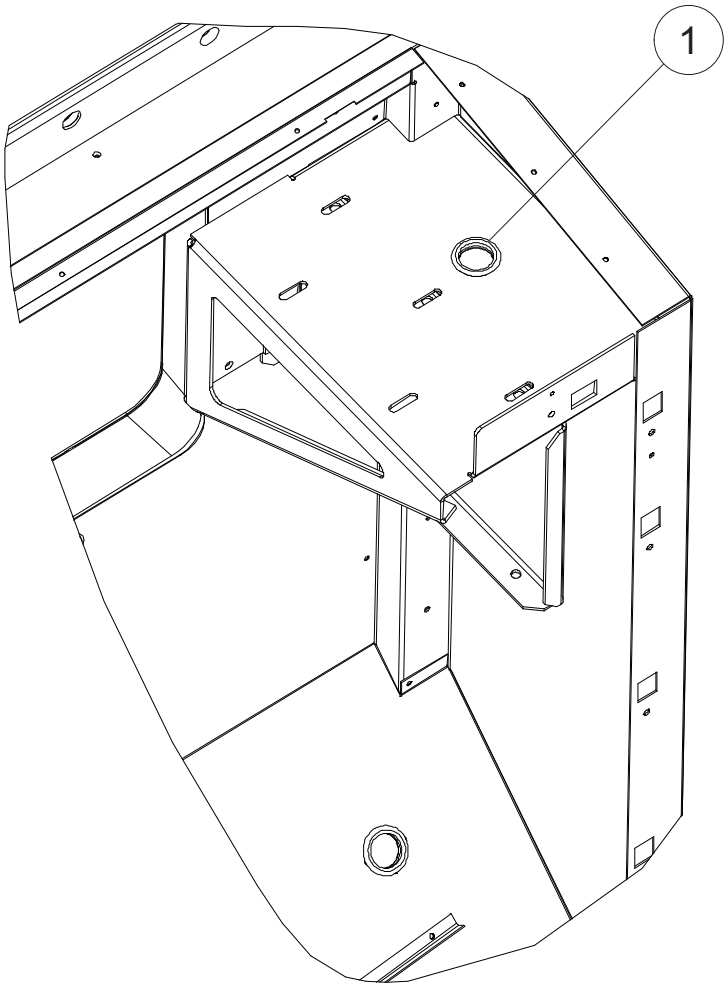

Item	Part Number	Description	Qty
1	66-U---1--5562-12	Plug, Button	1

4 Evaporator Access Panel

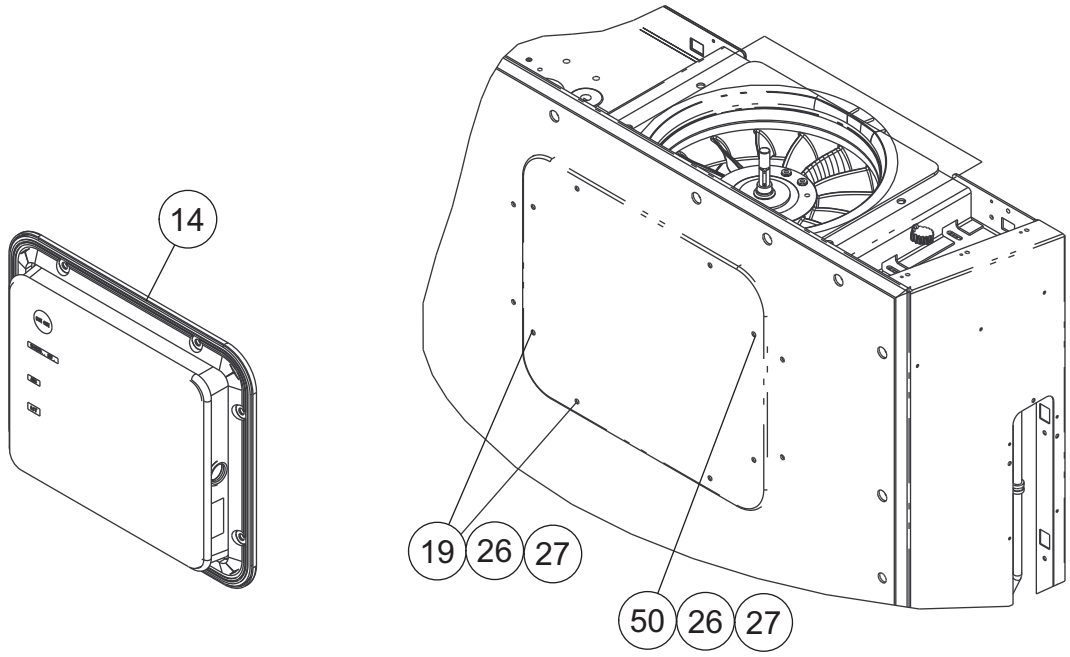

Item	Part Number	Description	Qty
14	79-01697-06SV	Evaporator Access Panel Assembly	1
19	34-66627-00	Screw, Cap Hex Head	2
26	34-06053-18	Washer, Rtng	8
27	34-06212-17	Washer, Plain	8
50	34-66644-00	Screw, Cap Hex Head	6

5 Compressor (PIDs NT5000, NT5001, NT5002, NT5003, NT5004, NT5010, NT5011, NT5103)

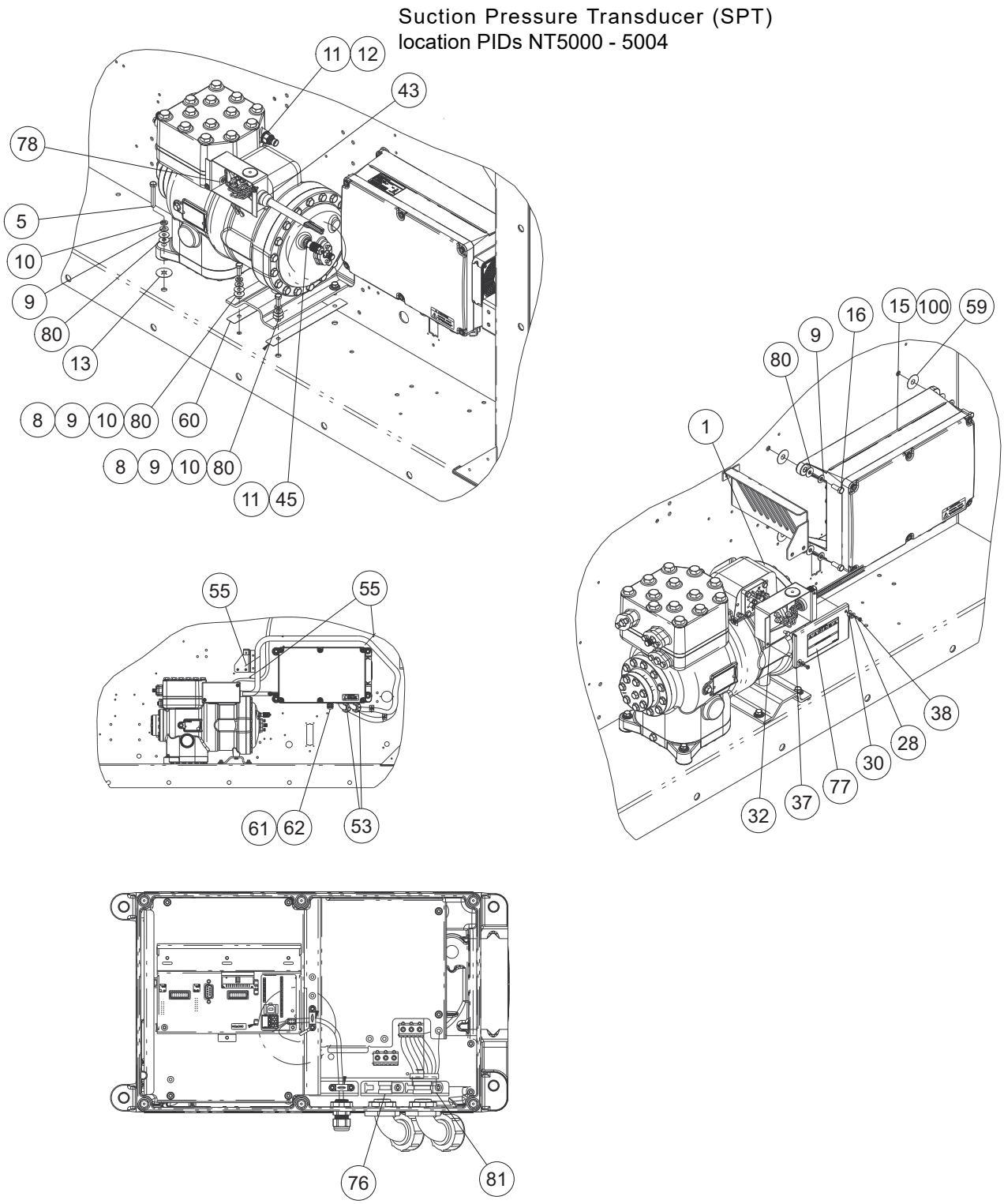

5 Compressor (PIDs NT5000, NT5001, NT5002, NT5003, NT5004, NT5010, NT5011, NT5103)

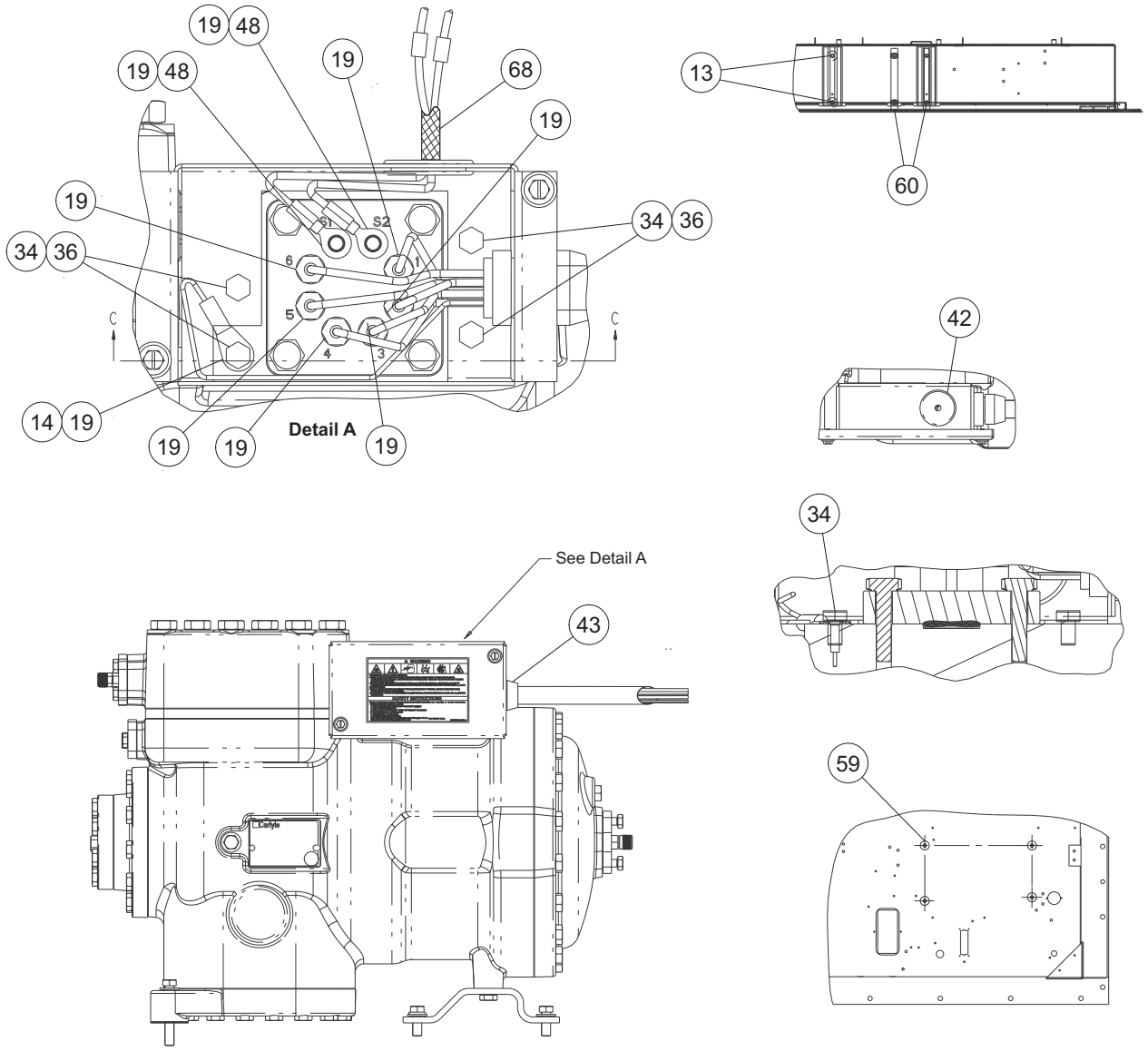

Item	Part Number	Description	Qty
1	79-04172-23	Compressor, No Sight Glass with Oil	1
5	66-U---1--5361-19	Screw, Cap Hex Head	2
8	66-U---1--5361-7	Screw, Cap Hex Head	4
9	66-U---1--5321-5	Washer, Plain	10
10	--AU--11JR-241	Washer, Lock	6
11	76-00892-12	O-Ring Service Kit - Includes:	1
	42-00805-02	O-Ring	1
	NSS	Lubricant	1

5 Compressor (PIDs NT5000, NT5001, NT5002, NT5003, NT5004, NT5010, NT5011, NT5103)			
12	76-00892-06	Suction Pressure Transducer, SPT, Kit: (**PIDs NT5000 to 5004**)	1
	NSS	Transducer	1
	42-00805-02	O-Ring	1
	NSS	Lubricant	1
13	58-04026-94	Protector	2
14	--AU--27JR-171	Washer, Lock	1
15	10-00482-00	Variable Frequency Drive (VFD), Danfoss (**PIDs NT5000 to 5102**)	1
16	66-U---1--5361-8	Screw, Cap Hex Head	4
19	22-66697-40	Wire Assembly	1
28	66-U---1--5321-8	Washer, Plain	2
30	34-06053-05	Washer	2
32	86-04959-00	Box	1
34	34-01152-10	Screw, Cap Hex Head	4
36	34-01146-06	Washer, Lock	4
37	68-17026-00	Cover	1
38	66-U---1--5371-7	Screw, Mach Hex Head	2
42	58-00065-78	Grommet	1
43	22-02302-03	Connector	1
45	76-00892-05	Low Side (Suction) Service Valve Kit (**PIDs NT5000 to 5004**):	1
	NSS	Service Valve	1
	42-00805-02	O-Ring	1
	NSS	Lubricant	1
48	--AT--14QA-172	Nut, Jam	2
53	22-04287-00	Connector	2
55	58-04316-00	Base, Mounting	3
59	58-04026-116	Protector	4
60	58-04026-95	Protector	2
61	22-02319-10	Connector	1
62	22-02319-11	Nut, Lock	1
68	58-04321-34	Tube, Slit	1
76	44-00370-02	Clamp, Cushioned	1
77	62-66086-00	Label	1
78	62-66087-00	Label	1
80	34-06053-02	Washer	16
81	34-00373-05	Clamp, Tube	1
100	10-00482-20SV	Variable Frequency Drive (VFD) Fan (**PIDs NT5000 to 5102**)	1

6 Compressor (PID NT5103)

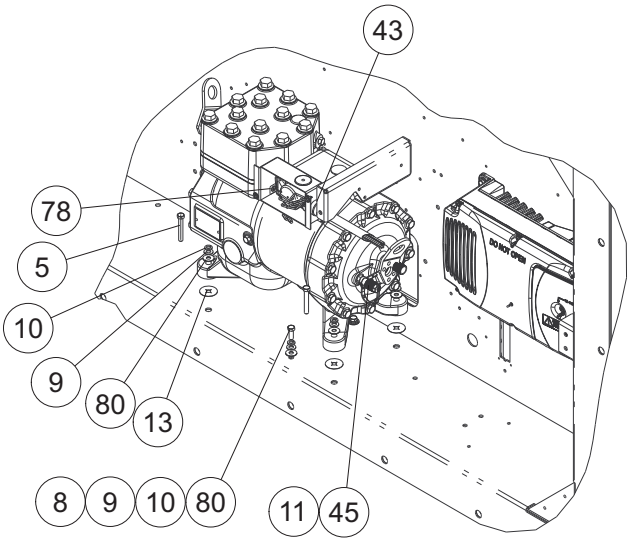

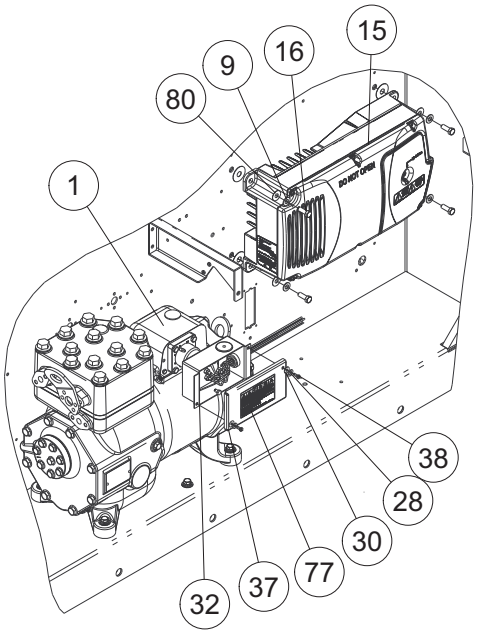

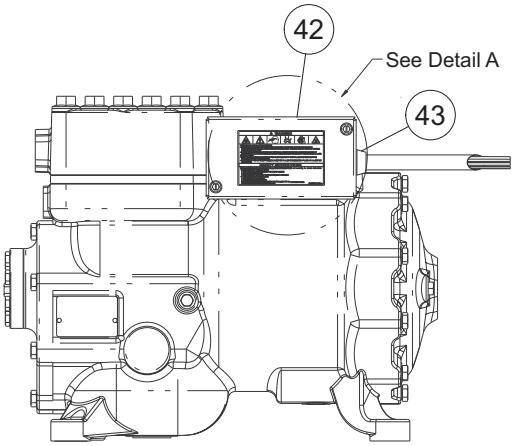

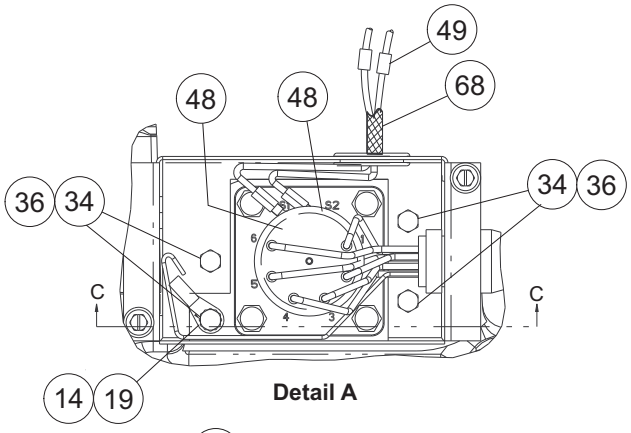

Detail A

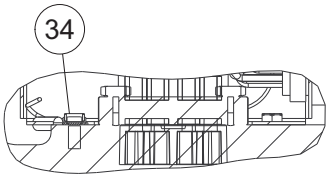

Section C-C

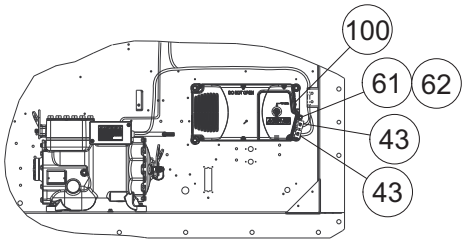

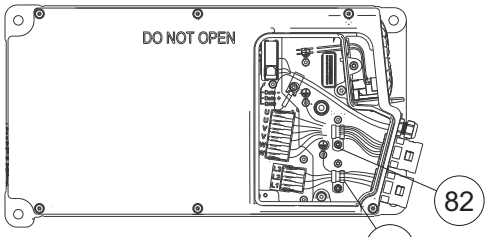

VFD Cover Removed

6 Compressor (PID NT5103)

Item	Part Number	Description	Qty
1	79-04172-23	Compressor, No Sight Glass with Oil	1
5	66-U---1--5361-19	Screw, Cap Hxhd	4
8	66-U---1--5361-7	Screw, Cap Hxhd	2
9	66-U---1--5321-5	Washer, Plain	10
10	--AU--11JR-241	Washer, Lock	6
11	76-00892-12	O-Ring Service Kit - Includes:	1
	42-00805-02	O-Ring	1
	NSS	Lubricant	1
13	58-04026-94	Protector	4
14	--AU--27JR-171	Washer, Lock	1
15	10-00560-01	Variable Frequency Drive (VFD), Bitzer	1
16	66-U---1--5361-8	Screw, Cap Hxhd	4
19	22-66697-40	Wire Assembly	1
28	66-U---1--5321-8	Washer, Plain	2
30	34-06053-05	Washer	2
32	86-04959-00	Box	1
34	34-01152-10	Screw, Cap Hxhd	4
36	34-01146-06	Washer, Lock	4
37	68-17026-00	Cover	1
38	66-U---1--5371-7	Screw, Mach Hxhd	2
42	58-00065-78	Grommet	1
43	22-02302-03	Connector	3
45	40-00801-01	Low Side (Suction) Service Valve	1
	40-00801-23	Valve Strap Only	1
48	--AT--14QA-172	Nut, Jam	2
49	66-U---1--3803	Tube, Heat Shrink	2
61	22-02319-10	Connector	1
62	22-02319-11	Nut, Lock	1
68	58-04321-34	Tube, Slit	1
77	62-66086-00	Label	1
78	62-66087-00	Label	1
80	34-06053-02	Washer	16
81	34-00373-07	Clamp, Tube	1
82	44-00370-02	Clamp, Cushioned	1
100	76-00932-00	Variable Frequency Drive (VFD) Fan	1

7 Compressor Tubing (PIDs NT5000, NT5001, NT5002, NT5003, NT5004)

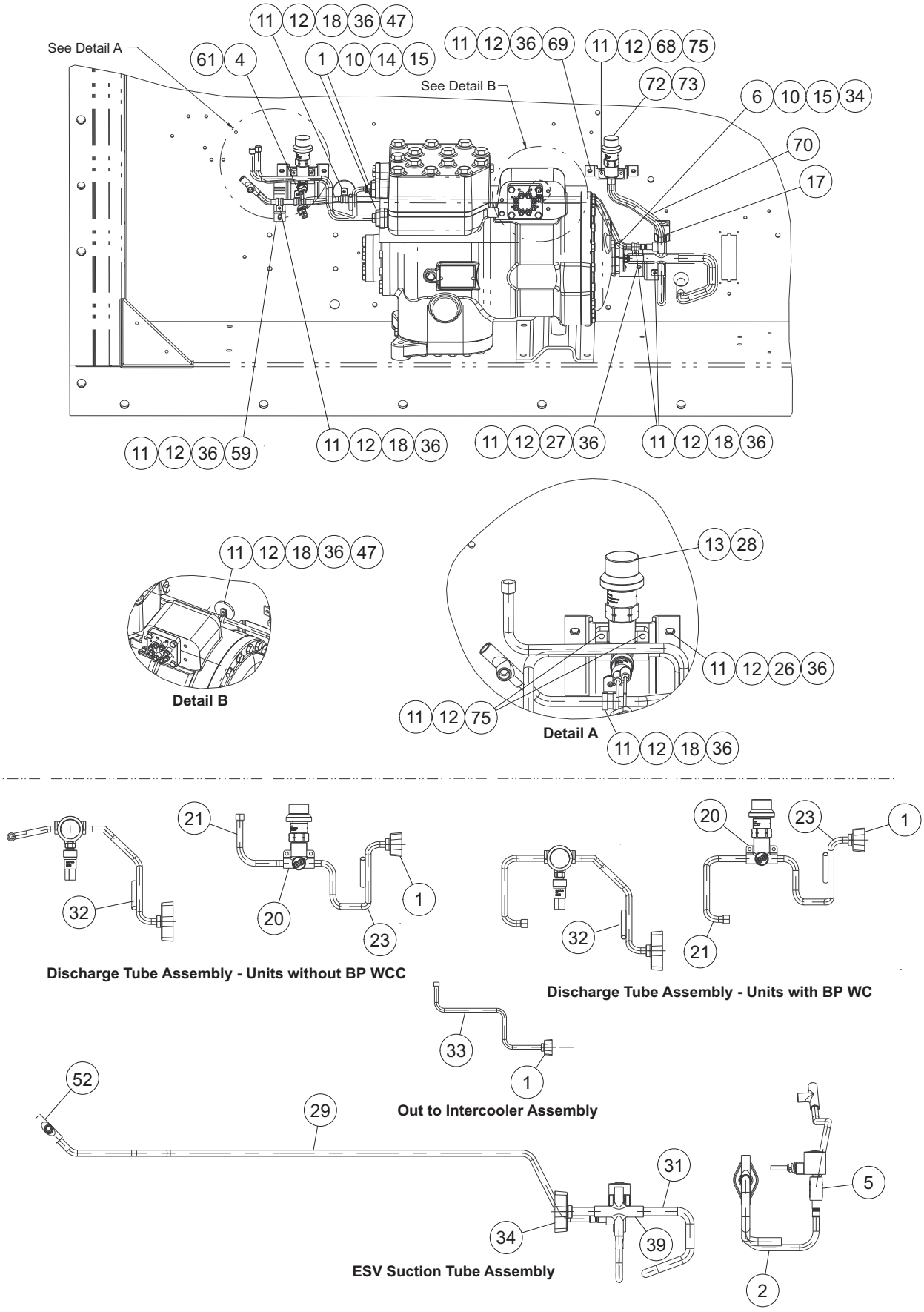

7 Compressor Tubing (PIDs NT5000, NT5001, NT5002, NT5003, NT5004)

Item	Part Number	Description	Qty
1	40-00707-01	Flange	2
2	56-09467-00	Tube	1
4	76-00892-11	O-Ring Service Kit:	1
	42-00805-01	O-Ring	1
	NSS	Lubricant	1
5	14-00394-01	Unloader Solenoid Valve (USV)	1
6	42-66644-00	Gasket, Suction	1
10	66-U---1--5321-4	Washer, Plain	6
11	66-U---1--5321-8	Washer, Plain	17
	66-U---1--5321-8	Washer, Plain (**NT5002 - unit with WCC**)	15
12	34-06053-05	Washer	17
	34-06053-05	Washer (**NT5002 - unit with WCC**)	15
13	76-00892-14	High Side O-Ring Service Kit:	1
	42-00805-04	O-Ring	1
	NSS	Lubricant	1
14	42-00726-00	Gasket	2
15	66-U---1--5361	Screw, Cap Hex Head	6
17	14-00394-20	Unloader Solenoid Valve (USV) Coil	1
18	44-00370-02	Clamp, Cushioned	5
20	40-00718-01	Tee	1
21	56-08881-00	Tube	1
	56-09471-00	Tube (**NT5002 - unit with WCC**)	1
23	56-09328-00	Tube	1
26	68-16223-01	Bracket	1
27	68-17827-00	Bracket	1
28	76-00892-02	High Side Pressure Relief Valve (HPRV) Service Kit:	1
	NSS	Valve, Relief	1
	42-00805-04	O-Ring	1
	NSS	Lubricant	1
29	56-09350-00	Tube	1
31	56-09468-00	Tube	1
32	56-08645-00	Tube	1
33	56-09397-00	Tube	1
34	40-00707-00	Flange	1
36	66-U---1--5371-6	Screw, Mach Hex Head	13
	66-U---1--5371-6	Screw, Mach Hex Head (**NT5002 - unit with WCC**)	11
39	40-00784-00	Cross	1

7 Compressor Tubing (PIDs NT5000, NT5001, NT5002, NT5003, NT5004)			
47	34-06295-00	Washer, Fender	2
52	40-00772-01	Tee	1
59	68-16607-01	Bracket (**NT5000, 5001, 5003, 5004**)	1
61	76-00892-08	High Pressure Switch (HPS) Service Kit:	1
	NSS	Switch, Pressure	1
	42-00805-01	O-Ring	1
	NSS	Lubricant	1
68	40-00783-00	Fitting	1
69	68-16223-02	Bracket	1
70	56-09469-00	Tube	1
72	76-00892-00	Low Side Pressure Relief Valve (LPRV) Service Kit:	1
	NSS	Valve, Relief	1
	42-00805-05	O-Ring	1
	NSS	Lubricant	1
73	76-00892-15	Low Side O-Ring Service Kit:	1
	42-00805-05	O-Ring	1
	NSS	Lubricant	1
75	66-U---1--5371-10	Screw, Mach Hex Head	4

7 Compressor Tubing (PIDs NT5010, NT5011)

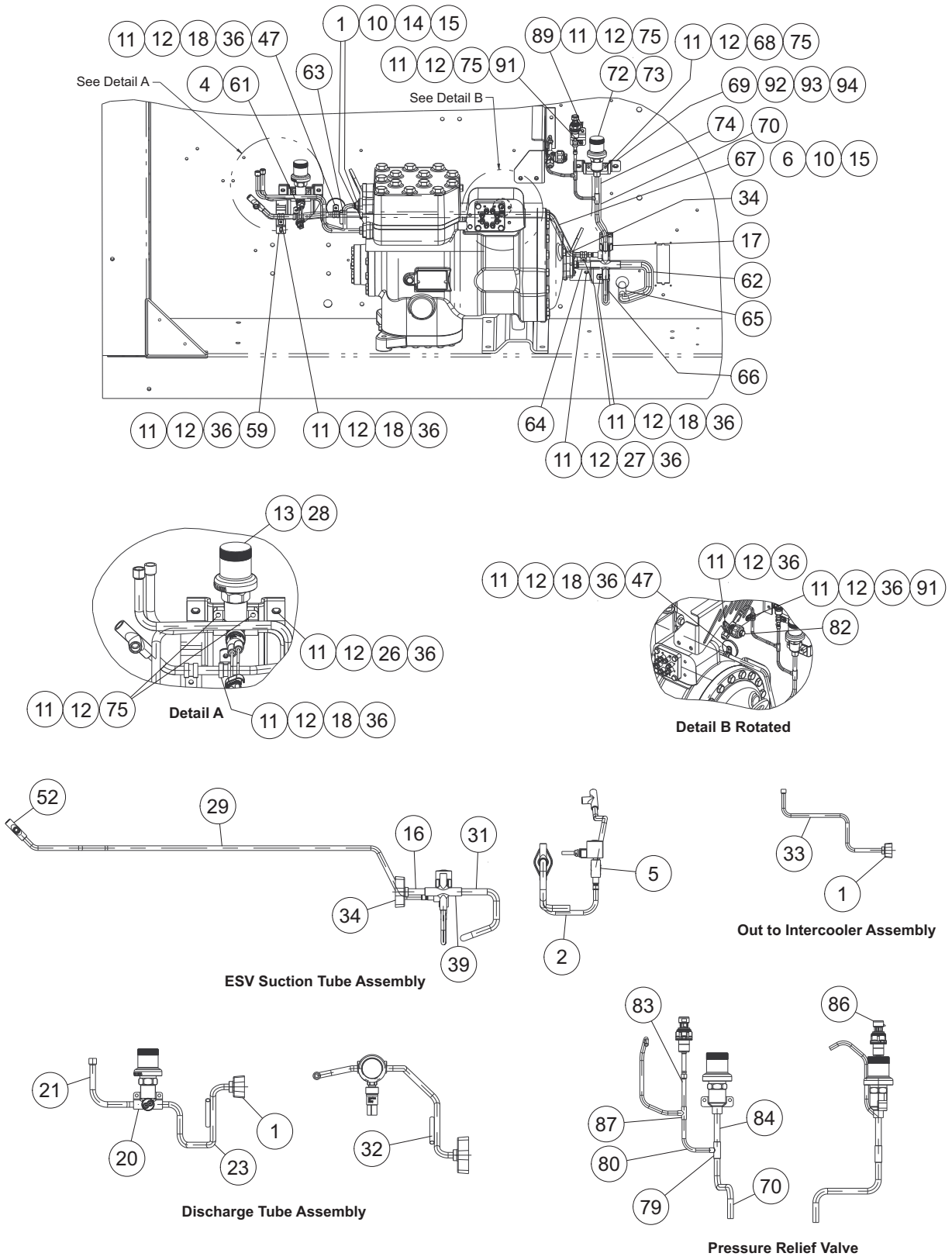

7 Compressor Tubing (PIDs NT5010, NT5011)

Item	Part Number	Description	Qty
1	40-00707-01	Flange	2
2	56-09467-00	Tube	1
4	76-00892-11	O-Ring Service Kit:	1
	42-00805-01	O-Ring	1
	NSS	Lubricant	1
5	14-00394-01	Unloader Solenoid Valve (USV)	1
6	42-66644-00	Gasket, Suction	1
10	66-U---1--5321-4	Washer, Plain	6
11	66-U---1--5321-8	Washer, Plain	19
12	34-06053-05	Washer	17
13	76-00892-14	High Side O-Ring Service Kit:	1
	42-00805-04	O-Ring	1
	NSS	Lubricant	1
14	42-00726-00	Gasket	2
15	66-U---1--5361	Screw, Cap Hxhd	6
16	99TS0865CK002200	Tube, Straight	1
17	14-00394-20	Coil	1
18	44-00370-02	Clamp, Cushioned	5
20	40-00718-01	Tee	1
21	56-08881-00	Tube	1
23	56-09328-00	Tube	1
26	68-16223-01	Bracket	1
27	68-17827-00	Bracket	1
28	76-66685-02	High Side Pressure Relief Valve (HPRV) Service Kit:	1
	NSS	Relief Valve	1
	42-00805-04	O-Ring	1
	NSS	Lubricant	1
29	56-09350-00	Tube	1
31	56-09468-00	Tube	1
32	56-08645-00	Tube	1
33	56-09397-00	Tube	1
34	40-00707-00	Flange	1
36	66-U---1--5371-6	Screw, Mach Hxhd	13
39	40-66646-00	Cross	1
47	34-06295-00	Washer, Fender	2
52	40-66645-00	Tee	1
59	68-16607-01	Bracket	1
61	76-00892-08	High Pressure Switch (HPS) Service Kit:	1
	NSS	Pressure Switch	1
	42-00805-01	O-Ring	1
	NSS	Lubricant	1

7 Compressor Tubing (PIDs NT5010, NT5011)			
62	42-00425-149	Insulation, Tube	1
63	42-00425-150	Insulation, Tube	1
64	42-00425-153	Insulation, Tube	1
65	42-00425-135	Insulation, Tube	1
66	42-00425-160	Insulation, Tube	1
67	42-00425-151	Insulation, Tube	1
68	40-00783-00	Fitting	1
69	68-18700-01	Bracket	1
70	56-66092-00	Tube	1
72	76-66685-00	Low Side Pressure Relief Valve (LPRV) Service Kit:	1
	NSS	Relief Valve	1
	42-00805-05	O-Ring	1
	NSS	Lubricant	1
73	76-00892-15	Low Side O-Ring Service Kit:	1
	42-00805-05	O-Ring	1
	NSS	Lubricant	1
74	42-00425-154	Insulation, Tube	1
75	66-U---1--5371-10	Screw, Mach Hxhd	7
79	40-00802-01	Tee	1
80	56-09667-00	Tube	1
81	56-66093-00	Tube	1
82	40-00801-01	Low Side Service Valve, Brazed In	1
	40-00801-23	Valve Strap Only	1
83	56-09664-00	Tube	1
84	99TS0647CK002400	Tube, Straight	1
86	12-00887-02	Suction Pressure Transducer (SPT), Brazed In	1
87	40-00168-02	Tee	1
89	68-18701-00	Bracket	1
91	34-00373-51	Clamp, Tube	2
92	66-U---1--5361-25	Screw, Cap Hxhd	2
93	66-U---1--5321-7	Washer, Plain	2
94	34-06053-00	Washer	2

7 Compressor Tubing (PID NT5103)

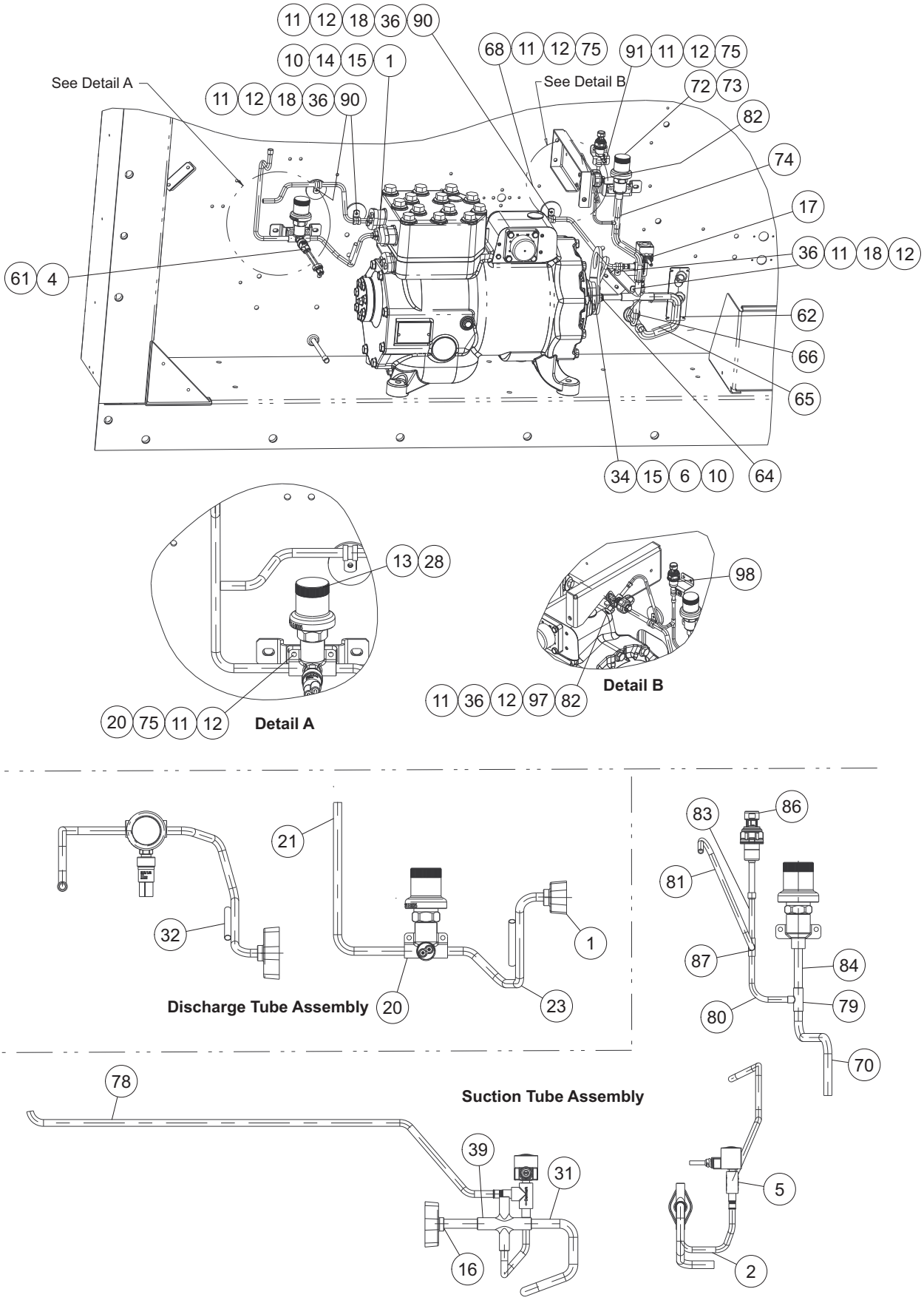

7 Compressor Tubing (PID NT5103)

Item	Part Number	Description	Qty
1	40-00707-01	Flange	1
2	56-09467-00	Tube	1
4	76-00892-11	O-Ring Service Kit:	1
	42-00805-01	O-Ring	1
	NSS	Lubricant	1
5	14-00394-01	Unloader Solenoid Valve (USV)	1
6	42-66644-00	Gasket, Suction	1
10	66-U---1--5321-4	Washer, Plain	4
11	66-U---1--5321-8	Washer, Plain	12
12	34-06053-05	Washer	12
13	76-00892-14	High Side O-Ring Service Kit:	1
	42-00805-04	O-Ring	1
	NSS	Lubricant	1
14	42-00726-00	Gasket	1
15	66-U---1--5361	Screw, Cap Hxhd	4
16	99TS0865CK002200	Tube, Straight	1
17	14-00394-20	Coil	1
18	44-00370-02	Clamp, Cushioned	5
20	40-00718-01	Tee	1
21	56-09661-00	Tube	1
23	56-09665-00	Tube	1
28	76-66685-02	High Side Pressure Relief Valve (HPRV) Service Kit:	1
	NSS	Relief Valve	1
	42-00805-04	O-Ring	1
	NSS	Lubricant	1
31	56-09651-00	Tube	1
32	56-08645-00	Tube	1
34	40-00707-00	Flange	1
36	66-U---1--5371-6	Screw, Mach Hxhd	8
39	40-66646-00	Cross	1
61	76-00892-08	High Pressure Switch (HPS) Service Kit:	1
	NSS	Pressure Switch	1
	42-00805-01	O-Ring	1
	NSS	Lubricant	1
62	42-00425-149	Insulation, Tube	1
63	42-00425-150	Insulation, Tube	1
64	42-00425-153	Insulation, Tube	1
65	42-00425-135	Insulation, Tube	1
66	42-00425-160	Insulation, Tube	1
67	42-00425-151	Insulation, Tube	1
68	40-00783-00	Fitting	1

7 Compressor Tubing (PID NT5103)			
70	56-66157-00	Tube	1
72	76-66685-00	Low Side Pressure Relief Valve (LPRV) Service Kit:	1
	NSS	Relief Valve	1
	42-00805-05	O-Ring	1
	NSS	Lubricant	1
73	76-00892-15	Low Side O-Ring Service Kit:	1
	42-00805-05	O-Ring	1
	NSS	Lubricant	1
74	42-00425-164	Insulation, Tube	1
75	66-U---1--5371-10	Screw, Mach Hxhd	5
78	56-09669-00	Tube	1
79	40-00802-01	Tee	1
80	56-09667-00	Tube	1
81	56-09670-00	Tube	1
82	40-00801-01	Low Side Service Valve, Brazed In	1
83	56-09664-00	Tube	1
84	56-66152-00	Tube, Straight	1
86	12-00887-02	Suction Pressure Transducer (SPT), Brazed In	1
87	40-00168-02	Tee	1
91	34-00373-51	Clamp, Tube	2
97	58-04910-25	Protector	1
98	66-U---1--3803-19	Tube, Heat Shrink	
NS	07-00593-00	Dye, Leak Detection, 14.5 ml	1

8 Gas Cooler Assembly, No WCC (PIDs NT5000, NT5001, NT5003, NT5004)

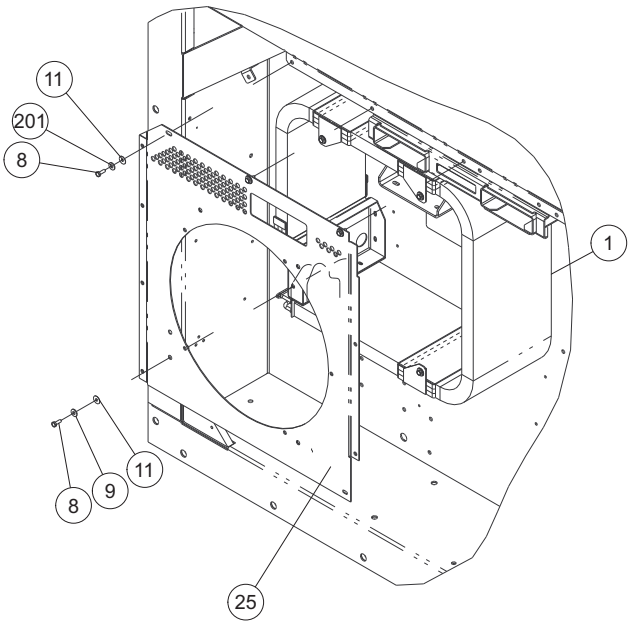

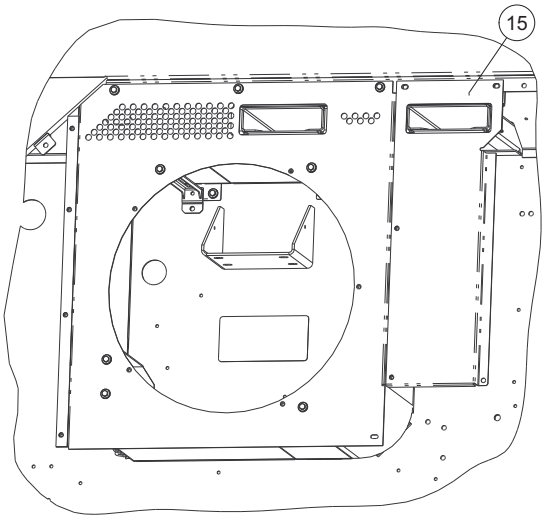

Viewed with Covers Installed

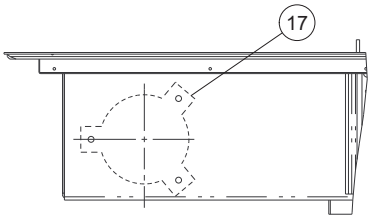

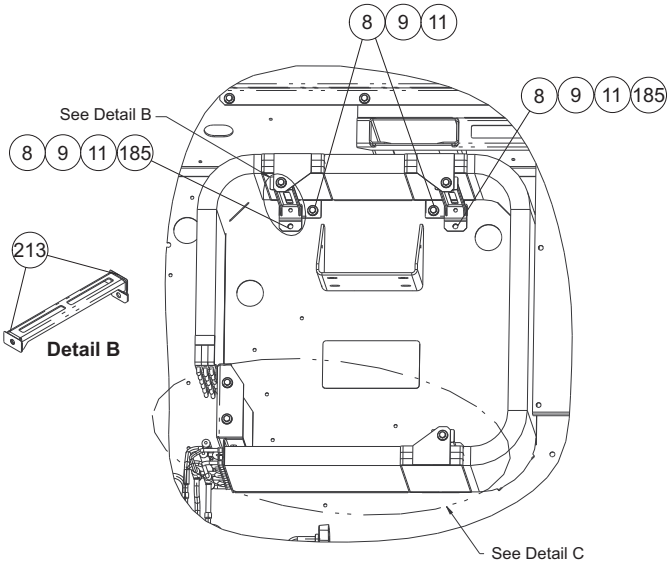

Detail B

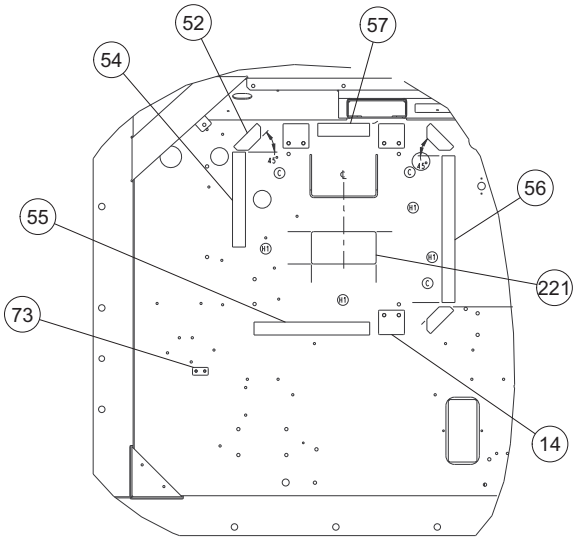

Gaskets On Frame

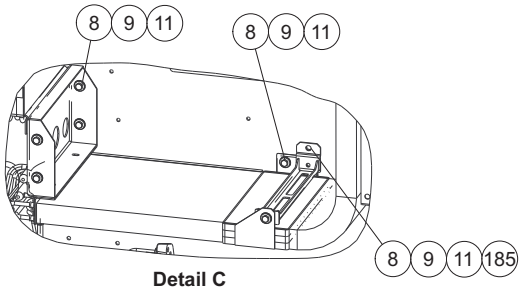

Detail C

8 Gas Cooler Assembly, No WCC (PIDs NT5000, NT5001, NT5003, NT5004)

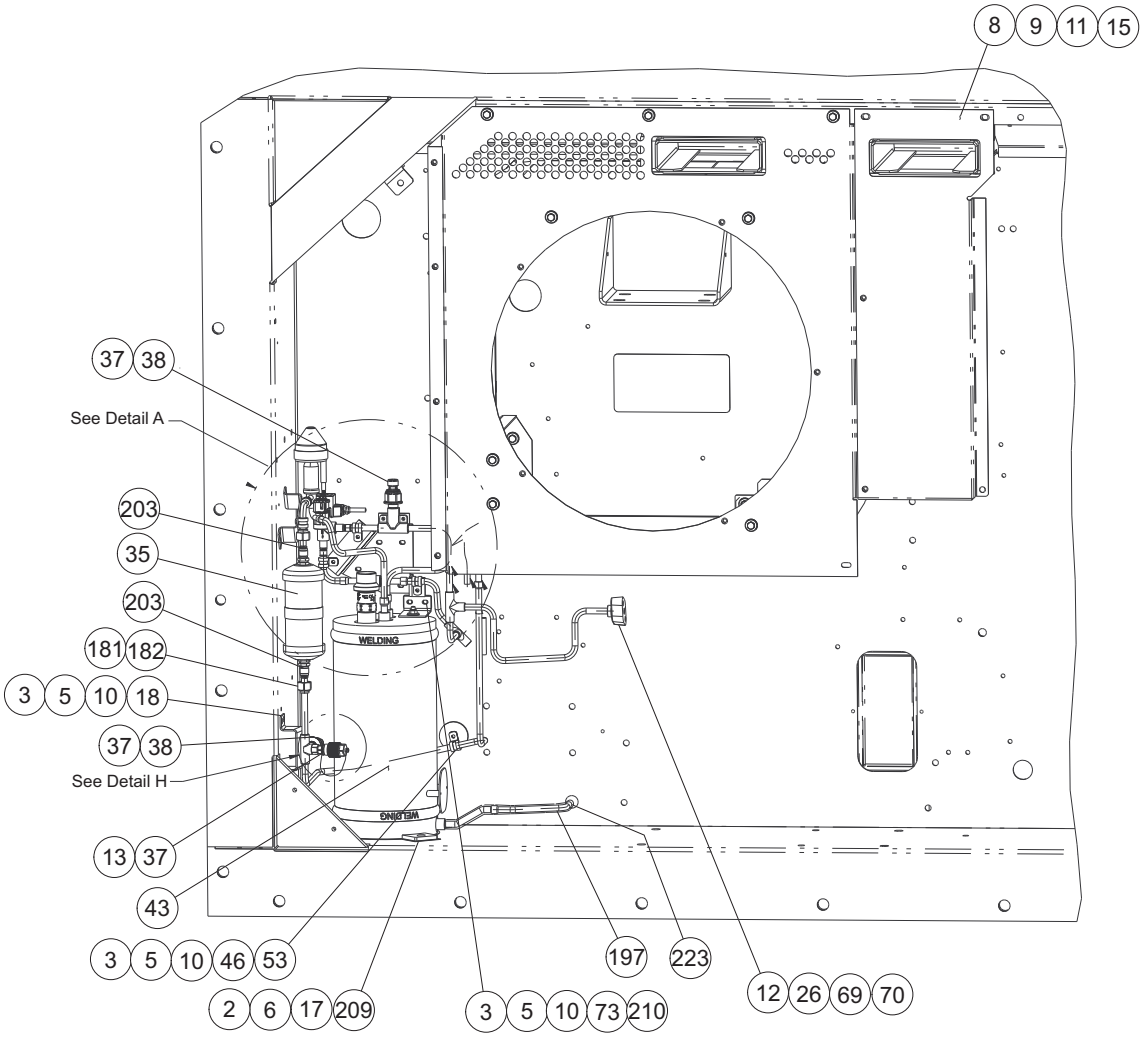

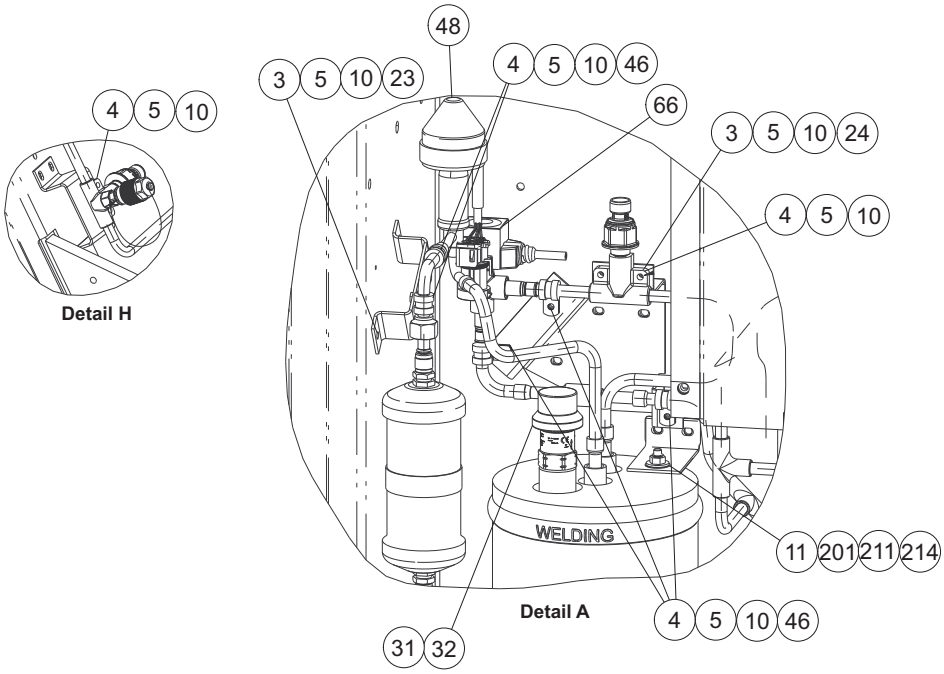

8 Gas Cooler Assembly, No WCC (PIDs NT5000, NT5001, NT5003, NT5004)

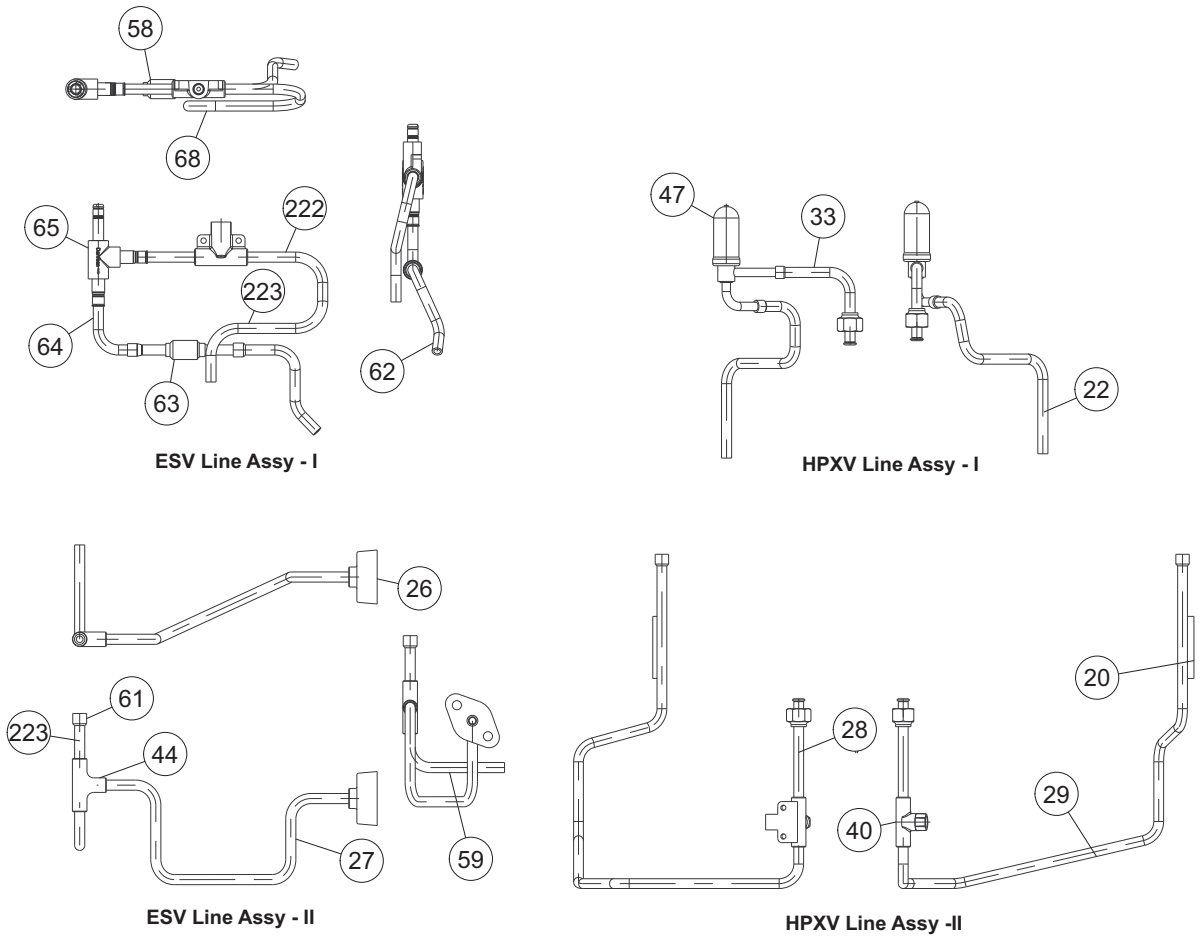

Item	Part Number	Description	Qty
1	81-04258-20	Gas Cooler Coil Assembly	1
2	34-06053-02	Washer	3
3	66-U---1--5371-7	Screw, Machine Hex Head	A/R
4	66-U---1--5371-6	Screw, Machine Hex Head	A/R
5	66-U---1--5321-8	Washer, Plain	A/R
6	66-U---1--5361-39	Screw, Cap Hex Head	3
8	66-U---1--5361-25	Screw, Cap Hex Head	A/R
9	66-U---1--5321-7	Washer, Plain	A/R
10	34-06053-05	Washer	A/R
11	34-06053-00	Washer	A/R
12	66-U---1--5321-4	Washer, Plain	2
13	40-00709-00	High Side (Discharge) Service Valve	1
14	58-04910-19	Protector	3
15	68-17821-00	Cover (PID NT5000, NT5003, NT5004)	1
	68-17821-01	Cover (PID NT5001)	
17	58-04026-135	Protector	1
18	68-16335-01	Bracket	1
20	56-08645-00	Tube	1

8 Gas Cooler Assembly, No WCC (PIDs NT5000, NT5001, NT5003, NT5004)			
22	56-09334-00	Tube	1
23	68-16409-01	Bracket	1
24	68-17825-00	Bracket	1
25	79-04206-00	Gas Cooler Cover Assembly - Includes:	1
	68-18295-00	Cover	1
	42-66647-08	Gasket	1
	42-66647-01	Gasket	1
	42-66647-09	Gasket	1
	42-66647-03	Gasket	1
	58-04910-13	Protector	2
	42-00465-03	Gasket	1
	58-04910-14	Protector	1
	42-66647-00	Gasket	3
26	40-00707-01	Flange	1
27	56-09378-00	Tube	1
28	56-09332-00	Tube	1
29	56-09383-00	Tube	1
31	42-00805-03	O-Ring	1
32	76-00892-01	Flash Tank Pressure Relief Valve (FTPRV) Service Kit - Includes:	1
	14-00407-03	Valve, Relief	1
	42-00805-03	O-Ring	1
	46-00058-00	Lubricant	1
33	56-09331-00	Tube	1
35	14-00406-01	Filter Drier	1
	14-00406-04	Filter Drier (only for system clean out after burnout)	1
37	42-00805-00	O-Ring	3
38	76-00892-07	Flash Tank Pressure Transducer (FPT), Discharge Pressure Transducer (DPT) Service Kit - Includes:	2
	12-00688-03	Transducer	1
	42-00805-00	O-Ring	1
	46-00058-00	Lubricant	1
40	40-00701-01	Fitting	1
43	65-00214-00	Flash Tank Receiver Assembly	1
44	40-00772-01	Tee	1
46	44-00370-02	Clamp, Cushioned	A/R
47	14-00396-00	High Pressure Expansion Valve (HPXV)	1
48	14-00396-10	High Pressure Expansion Valve (HPXV) Coil, 12 VDC	1
52	43-66647-00	Gasket	3
53	34-06295-00	Washer, Fender	1
54	42-66647-01	Gasket	1
55	42-66647-05	Gasket	1
56	42-66647-03	Gasket	1
57	42-66647-04	Gasket	1

8 Gas Cooler Assembly, No WCC (PIDs NT5000, NT5001, NT5003, NT5004)			
58	40-00702-01	Tee	1
59	56-08822-00	Tube	1
61	56-08853-00	Tube (PID NT5000, NT5001, NT5003)	1
	56-66064-00	Tube (PID NT5004)	1
62	56-08841-00	Tube	1
63	14-00413-00	Check Valve	1
64	56-08792-00	Tube	1
65	14-00394-01	Economizer Solenoid Valve (ESV)	1
66	14-00394-20	Economizer Solenoid Valve (ESV) Coil	1
68	56-09335-00	Tube (PID NT5000, NT5001, NT5003)	1
	56-09622-00	Tube (PID NT5004)	1
69	42-00726-00	Gasket	1
70	66-U---1--5361	Screw, Cap Hex Head	2
73	58-04026-118	Protector	1
181	66-U---1--3882	Wire Tie	4
182	42-00032-13	Insulation	2
185	86-04994-00	Bracket	3
197	56-09329-00	Tube (PID NT5000, NT5001, NT5003)	1
	56-66067-00	Tube (PID NT5004)	1
201	66-U---1--5321-3	Washer, Plain	4
203	14-00406-20	O-Ring	2
206	58-01097-00	Cord, Nylon	1
207	22-02205-00	Connector	2
209	66-U---1--5321-13	Washer, Plain	3
210	68-17828-00	Bracket	1
211	34-00667-11	Nut, Self Lock	1
213	58-04910-05	Protector	6
214	58-04026-119	Protector	1
217	79-66735-02	Bracket	1
221	58-04026-38	Protector	1
222	56-09623-00	Tube	1
223	14-00176-01	Strainer	3

8 Gas Cooler Assembly, No WCC (PIDs NT5010, NT5011)

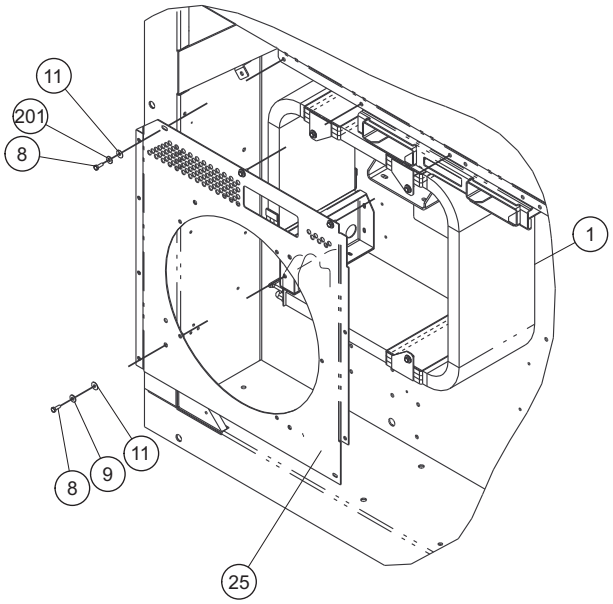

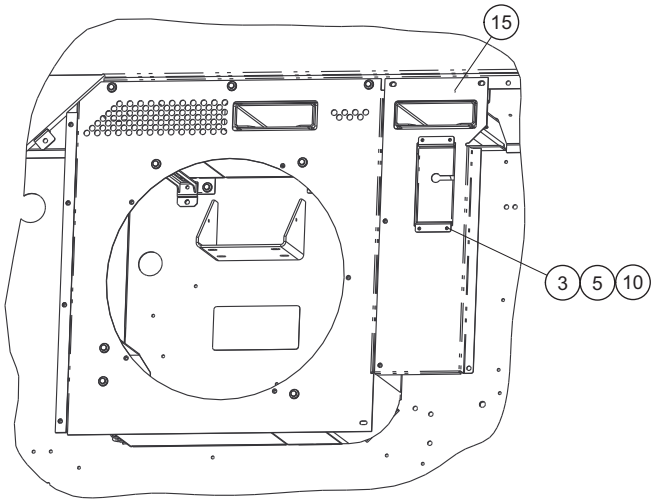

Viewed with Covers Installed

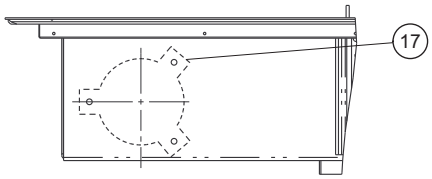

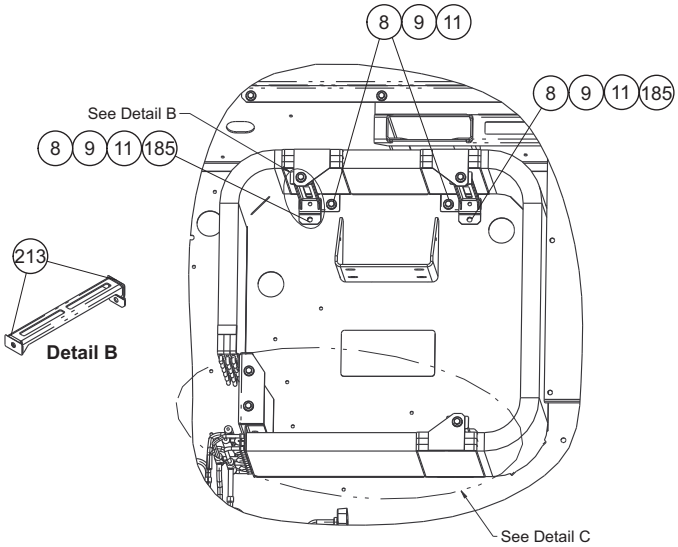

Detail B

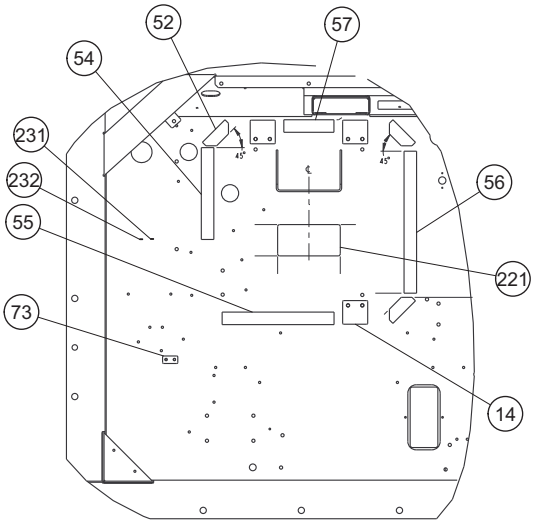

Gaskets On Frame

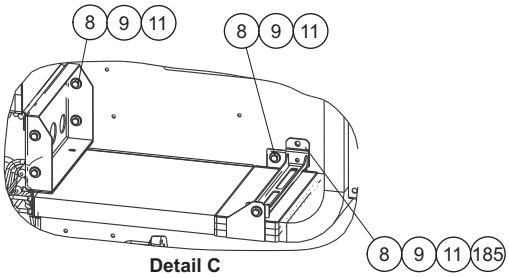

Detail C

8 Gas Cooler Assembly, No WCC (PIDs NT5010, NT5011)

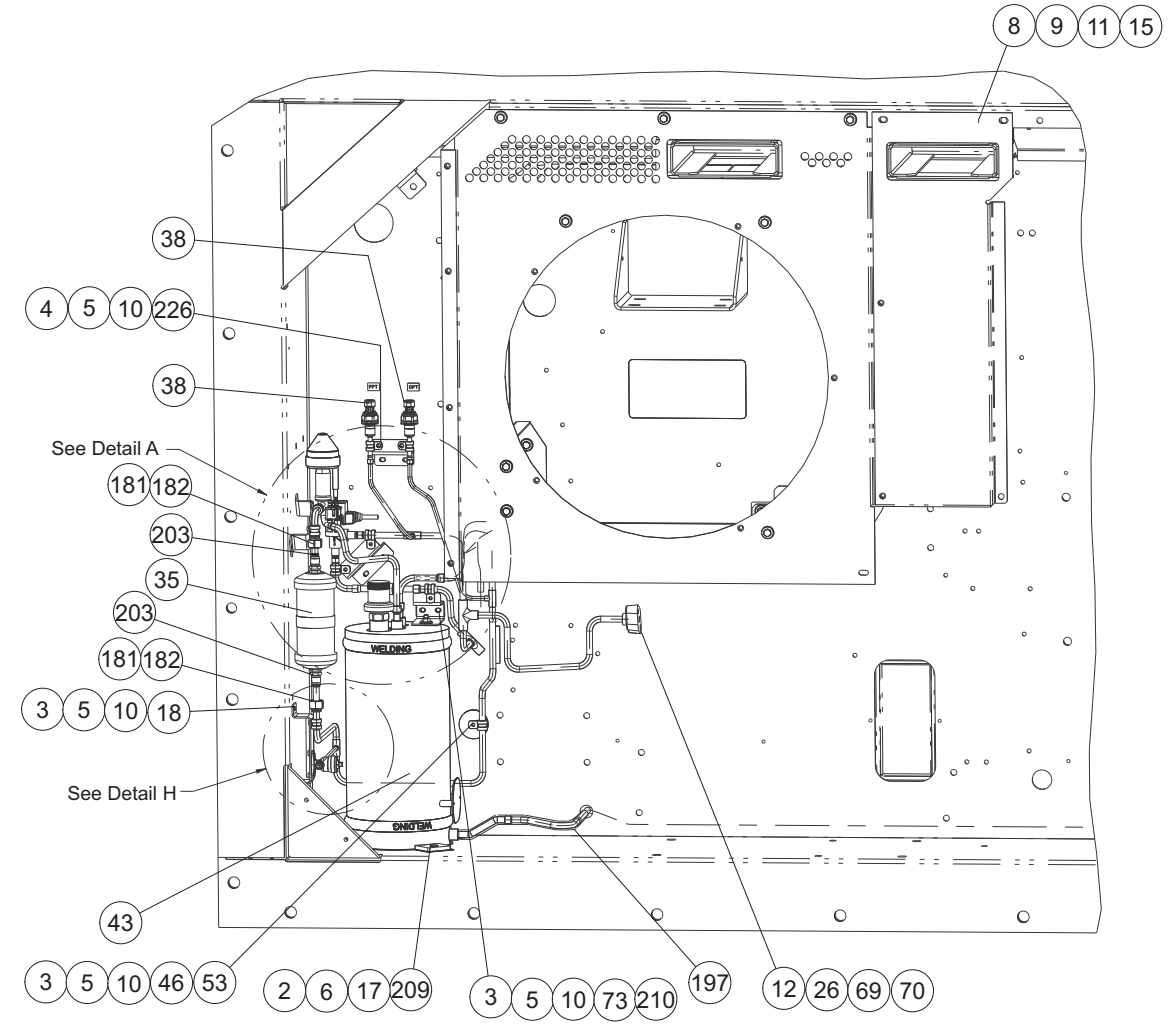

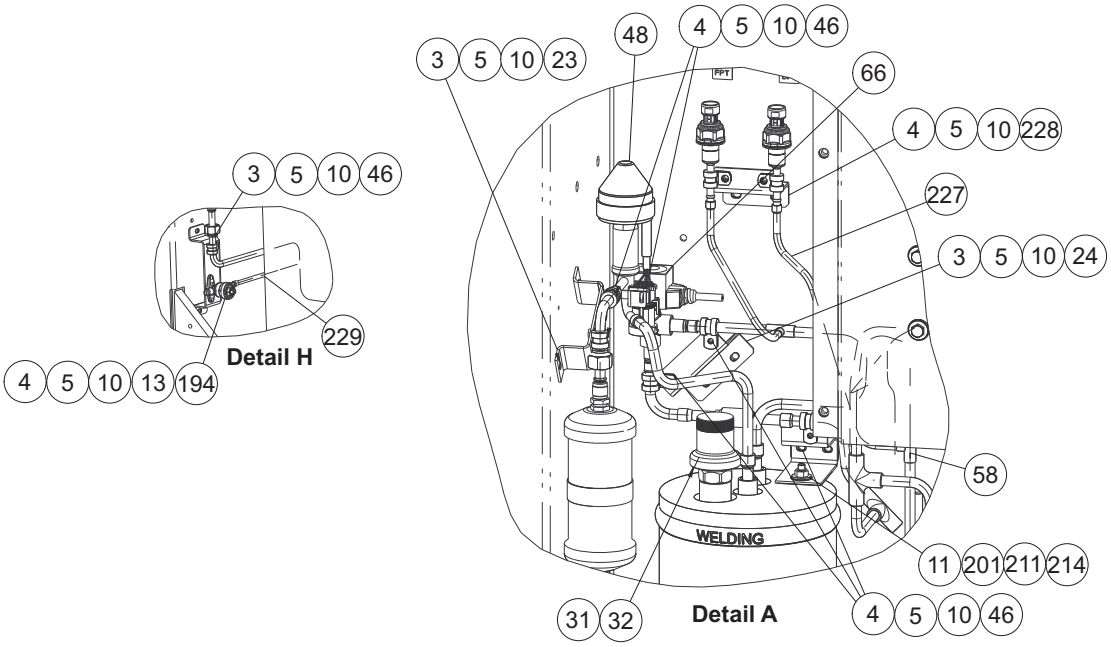

8 Gas Cooler Assembly, No WCC (PIDs NT5010, NT5011)

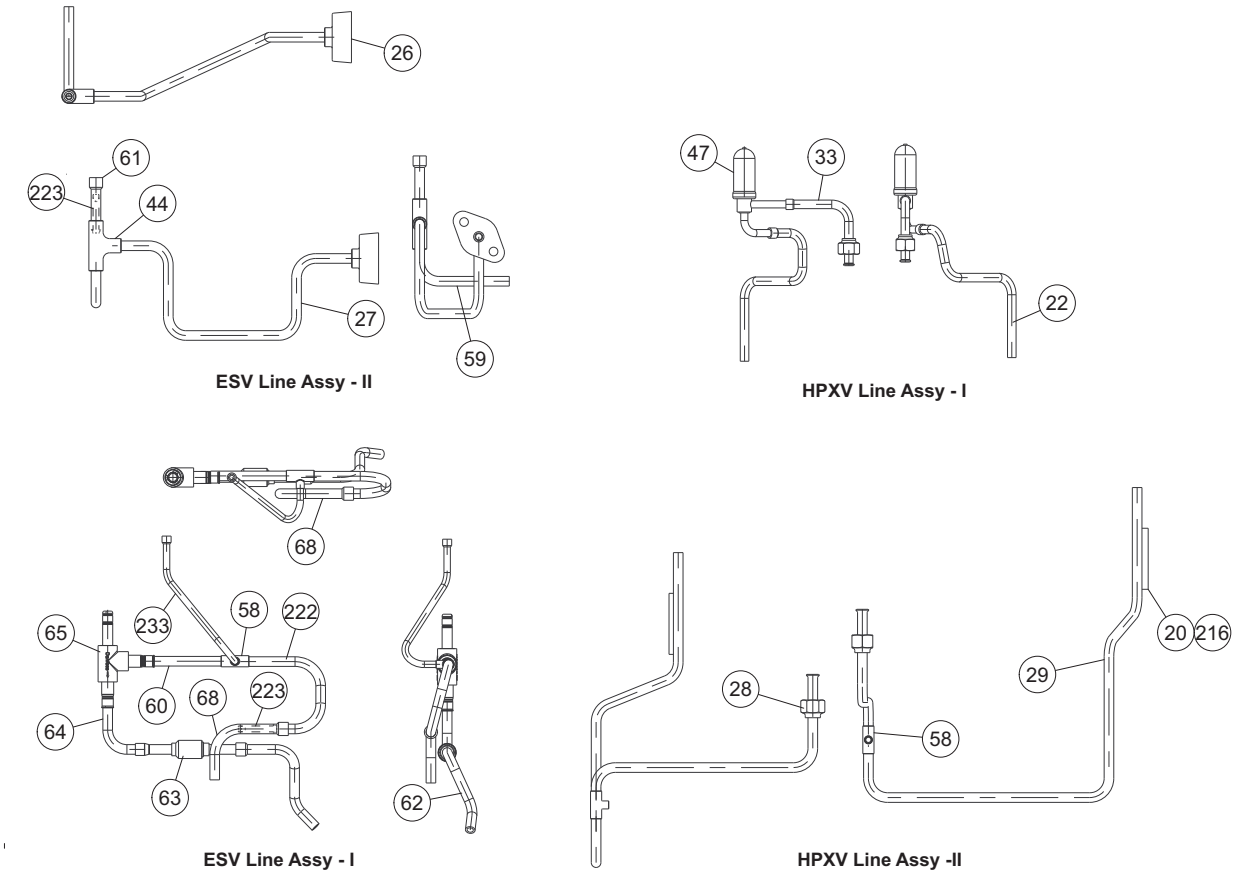

Item	Part Number	Description	Qty
1	81-04258-20	Coil Assembly	1
2	34-06053-02	Washer	3
3	66-U---1--5371-7	Screw, Mach Hxhd	12
4	66-U---1--5371-6	Screw, Mach Hxhd	10
5	66-U---1--5321-8	Washer, Plain	23
6	66-U---1--5361-39	Screw, Cap Hxhd	3
8	66-U---1--5361-25	Screw, Cap Hxhd	24
9	66-U---1--5321-7	Washer, Plain	21
10	34-06053-05	Washer	22
11	34-06053-00	Washer	25
12	66-U---1--5321-4	Washer, Plain	2
13	40-00801-01	High Side (Discharge) Service Valve, Brazed In	1
14	58-04910-19	Protector	3
15	68-17821-00	Cover	1
16	46-00025-05	Oil, Compressor	0.53
17	58-04026-135	Protector	1
18	68-18698-00	Bracket	1

8 Gas Cooler Assembly, No WCC (PIDs NT5010, NT5011)			
20	56-08645-00	Tube	1
22	56-09334-00	Tube	1
23	68-18967-00	Bracket	1
24	68-18686-00	Bracket	1
25	79-04206-00	Cover Assembly - Includes:	1
	68-18295-00	Cover	1
	42-66647-08	Gasket	1
	42-66647-01	Gasket	1
	42-66647-09	Gasket	1
	42-66647-03	Gasket	1
	58-04910-13	Protector	2
	42-00465-03	Gasket	1
	58-04910-14	Protector	1
	42-66647-00	Gasket	3
26	40-00707-01	Flange	1
27	56-09378-00	Tube	1
28	56-09592-00	Tube	1
29	56-09707-00	Tube	1
31	42-00805-03	O-Ring	1
32	76-66685-01	Flash Tank Pressure Relief Valve (FTPRV) Service Kit - Includes:	1
	14-00472-01	Relief Valve	1
	42-00805-03	O-Ring	1
	46-00058-00	Lubricant	1
33	56-09331-00	Tube	1
35	14-00406-01	Filter Drier	1
38	12-00887-03	Flash Tank Pressure Transducer (FPT), Discharge Pressure Transducer (DPT)	2
43	65-00214-00	Flash Tank Receiver Assembly	1
44	40-00772-01	Tee	1
46	44-00370-02	Clamp, Cushioned	7
47	14-00396-00	High Pressure Expansion Valve (HPXV)	1
48	14-00396-10	High Pressure Expansion Valve (HPXV) Coil,12 Vdc	1
52	42-66647-00	Gasket	3
53	34-06295-00	Washer, Fender	1
54	42-66647-01	Gasket	1
55	42-66647-05	Gasket	1
56	42-66647-03	Gasket	1
57	42-66647-04	Gasket	1
58	40-00802-01	Tee	3
59	56-08822-00	Tube	1
60	56-09676-00	Tube	1
61	56-66064-00	Tube	1

8 Gas Cooler Assembly, No WCC (PIDs NT5010, NT5011)			
62	56-08841-00	Tube	1
63	14-00413-00	Valve, Check	1
64	56-08792-00	Tube	1
65	14-00394-01	Economizer Solenoid Valve (ESV)	1
66	14-00394-20	Economizer Solenoid Valve (ESV) Coil	1
68	56-09622-00	Tube	1
69	42-00726-00	Gasket	1
70	66-U---1--5361	Screw, Cap Hxhd	2
73	58-04026-118	Protector	1
120	66-U---1--3882-8	Wire Tie	8
181	66-U---1--3882	Wire Tie	4
182	42-00032-13	Insulation	2
185	86-04994-00	Bracket	3
194	46-00053-00	Refrigerant	9.5
197	56-09641-00	Tube	1
201	66-U---1--5321-3	Washer, Plain	4
203	14-00406-20	O-Ring	2
209	66-U---1--5321-13	Washer, Plain	3
210	68-18688-00	Bracket	1
211	34-00667-11	Nut, Self Lock	1
213	58-04910-05	Protector	6
214	58-04026-119	Protector	1
221	58-04026-38	Protector	1
222	56-09623-00	Tube	1
223	14-00176-01	Strainer	3
226	34-00373-51	Clamp, Tube	2
227	56-66089-00	Tube	1
228	68-18689-00	Bracket	1
229	56-09666-00	Tube	1
231	62-10530-52	Label	1
232	62-10530-53	Label	1
233	56-09674-00	Tube	1

8 Gas Cooler Assembly, No WCC (PID NT5103)

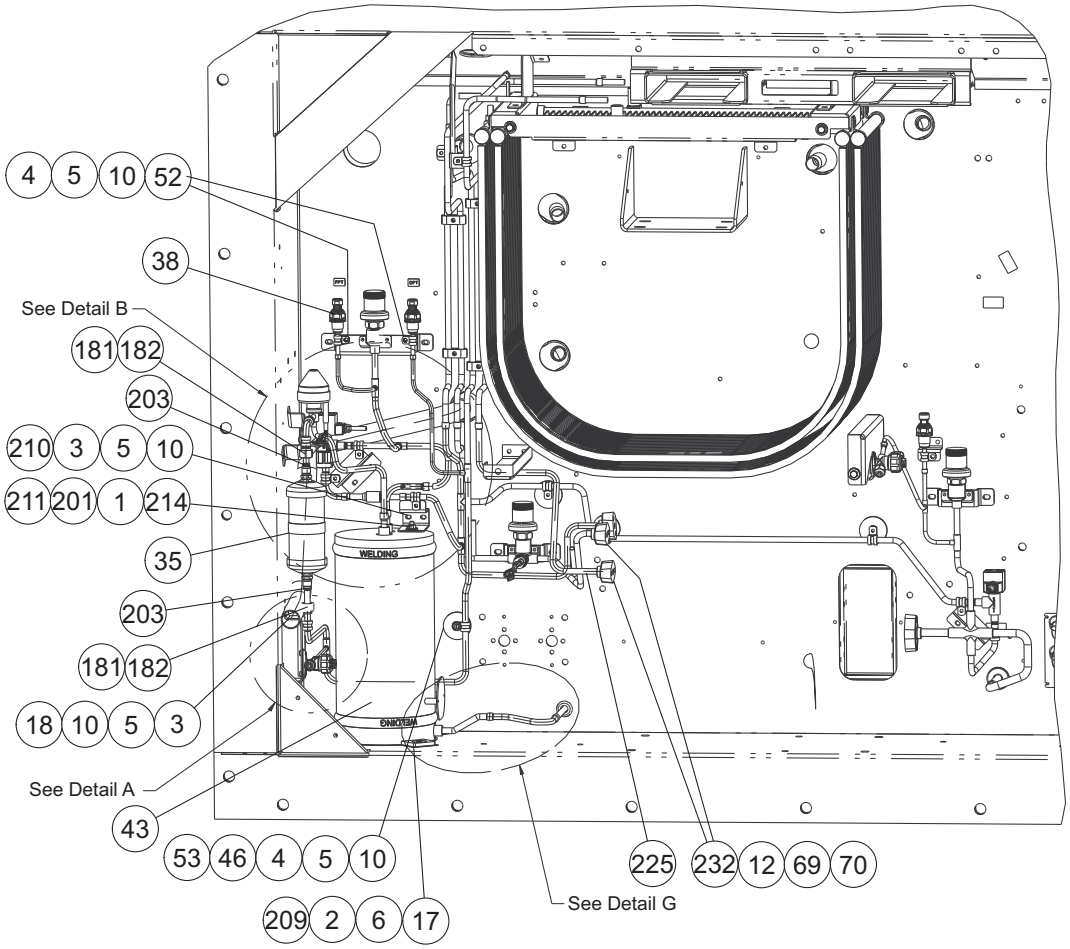

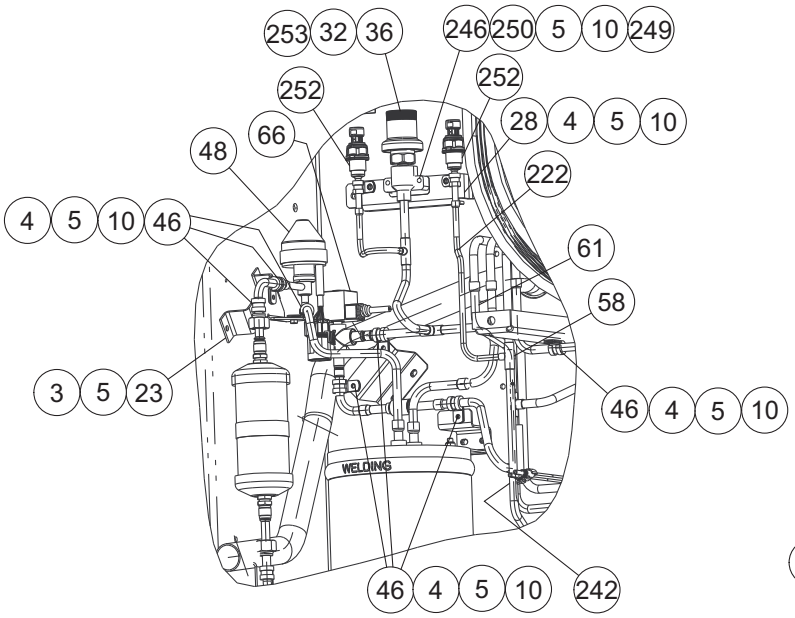

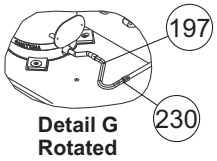

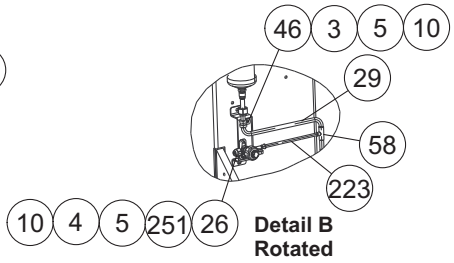

8 Gas Cooler Assembly, No WCC (PID NT5103)

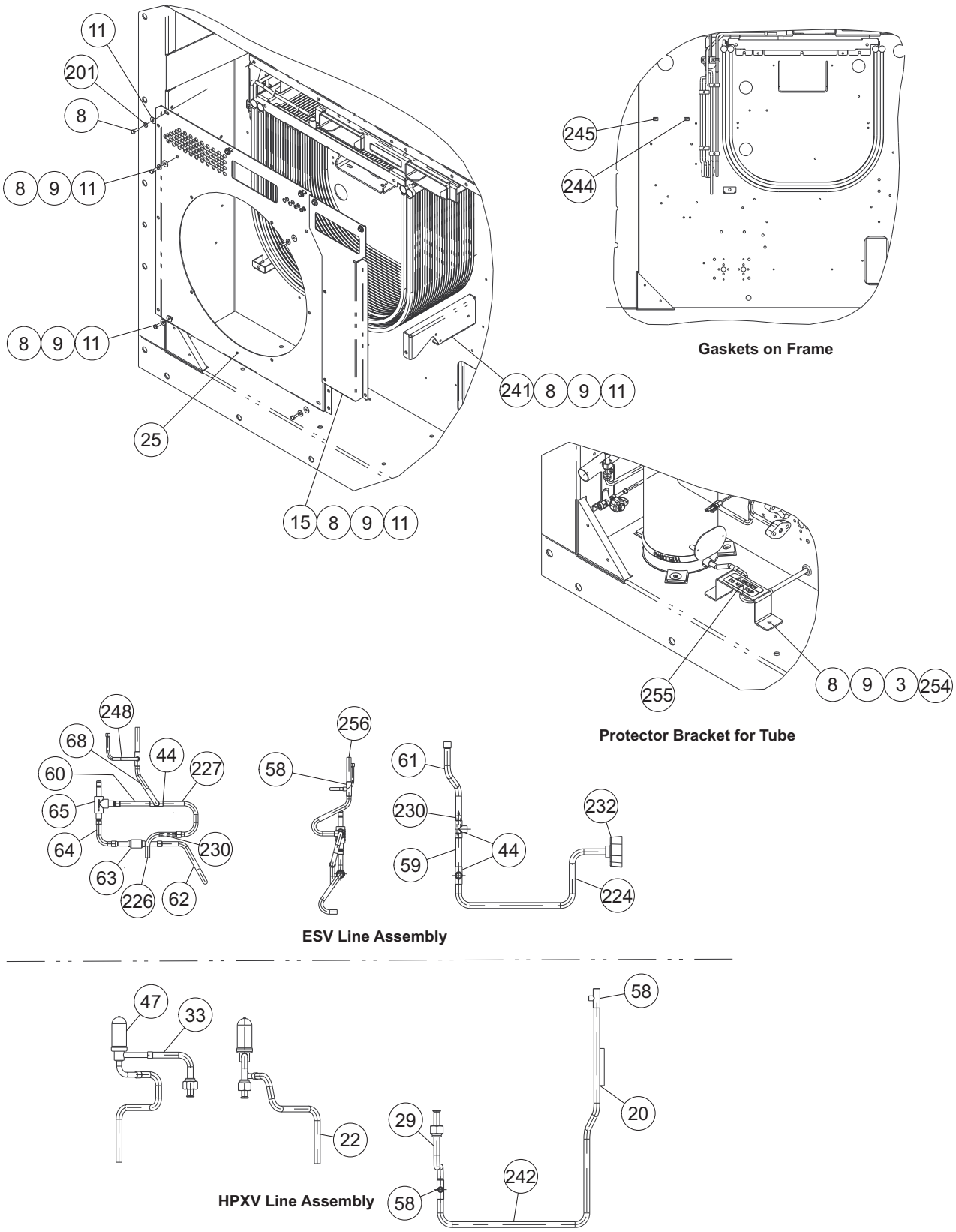

8 Gas Cooler Assembly, No WCC (PID NT5103)

Item	Part Number	Description	Qty
1	81-04258-20	Coil Assembly	1
2	34-06053-02	Washer	3
3	66-U---1--5371-7	Screw, Mach Hxhd	A/R
4	66-U---1--5371-6	Screw, Mach Hxhd	A/R
5	66-U---1--5321-8	Washer, Plain	A/R
6	66-U---1--5361-39	Screw, Cap Hxhd	3
8	66-U---1--5361-25	Screw, Cap Hxhd	A/R
9	66-U---1--5321-7	Washer, Plain	A/R
10	34-06053-05	Washer	A/R
11	34-06053-00	Washer	A/R
12	66-U---1--5321-4	Washer, Plain	4
15	68-18559-00	Cover	1
16	46-00025-05	Oil, Compressor	0.53
17	58-04026-135	Protector	1
18	68-18698-00	Bracket	1
20	56-08645-00	Tube	1
22	56-09636-00	Tube	1
23	68-18967-00	Bracket	1
25	68-19150-00	Cover Assembly	1
26	40-00801-01	High Side (Discharge) Service Valve, Brazed In	1
28	68-18836-00	Bracket	1
29	56-66155-00	Tube	1
32	76-66685-01	Flash Tank Pressure Relief Valve (FTPRV) Service Kit - Includes:	1
	14-00472-01	Relief Valve	1
	42-00805-03	O-Ring	1
	46-00058-00	Lubricant	1
33	56-09634-00	Tube	1
35	14-00406-01	Filter Drier	1
38	12-00887-03	Flash Tank Pressure Transducer (FPT), Discharge Pressure Transducer (DPT)	2
43	65-00214-00	Flash Tank Receiver Assembly	1
44	40-00802-00	Tee	3
46	44-00370-02	Clamp, Cushioned	9
47	14-00396-00	High Pressure Expansion Valve (HPXV)	1
48	14-00396-10	High Pressure Expansion Valve (HPXV) Coil,12 Vdc	1
52	42-66647-00	Gasket	3
53	34-06295-00	Washer, Fender	1
58	40-00802-01	Tee	3
59	56-66149-00	Tube	1
60	56-66147-00	Tube	1
61	56-66150-00	Tube	1

8 Gas Cooler Assembly, No WCC (PID NT5103)			
62	56-09668-00	Tube	1
63	14-00413-00	Check Valve	1
64	56-09631-00	Tube	1
65	14-00394-01	Economizer Solenoid Valve (ESV)	1
66	14-00394-20	Economizer Solenoid Valve (ESV) Coil	1
68	56-66153-00	Tube	1
69	42-00726-00	Gasket	1
70	66-U---1--5361	Screw, Cap Hxhd	2
120	66-U---1--3882-8	Wire Tie	8
181	66-U---1--3882	Wire Tie	4
182	42-00032-13	Insulation	2
197	56-09641-00	Tube	1
201	66-U---1--5321-3	Washer, Plain	4
203	14-00406-20	O-Ring	2
209	66-U---1--5321-13	Washer, Plain	3
210	68-18688-00	Bracket	1
211	34-00667-11	Nut, Self Lock	1
214	58-04026-119	Protector	1
221	58-04026-38	Protector	1
222	56-66156-00	Tube	1
223	56-09666-00	Tube	1
224	56-66151-00	Tube	1
225	56-09646-00	Tube	1
226	56-09622-00	Tube	1
227	56-66148-00	Tube	1
230	14-00176-01	Strainer	3
232	40-00707-01	Flange, High Side	2
241	86-05389-00	Bracket	1
242	56-66154-00	Tube	1
244	62-10530-52	Label, DPT	1
245	62-10530-53	Label, FTP	1
246	40-00783-01	Fitting	1
248	56-09731-00	Tube	1
249	66-U---1--5371-10	Screw, Mach Hxhd	2
250	58-04910-24	Protector, Coil	1
251	58-04910-25	Protector, Coil	1
252	66-U---1--3803-19	Tube, Heat Shrink	2
253	42-00805-03	O-Ring	1
254	68-19254-00	Bracket	1
255	62-66235-00	Label, Caution	1
256	56-66152-00	Tube	1

8 Gas Cooler / Condenser Assembly, with WCC (PID NT5002)

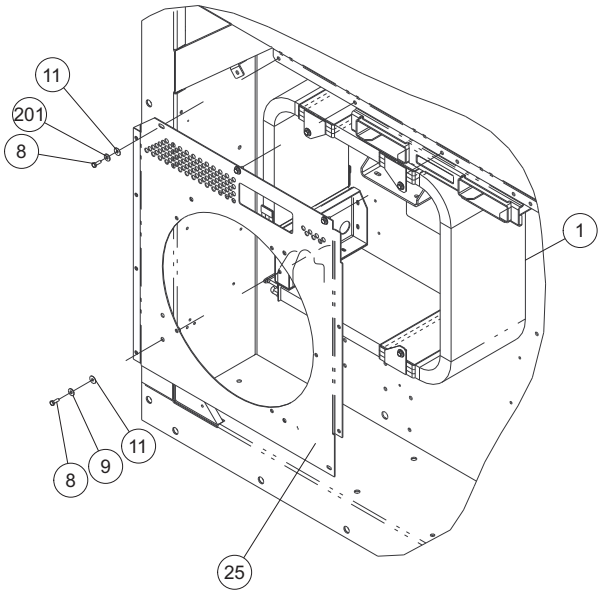

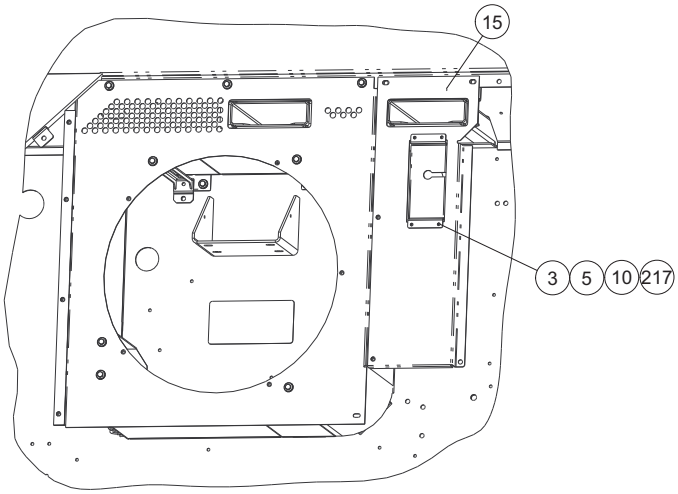

Viewed with Covers Installed

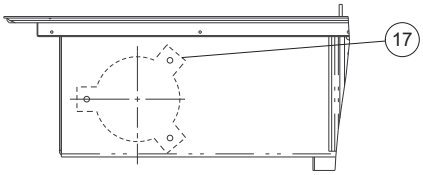

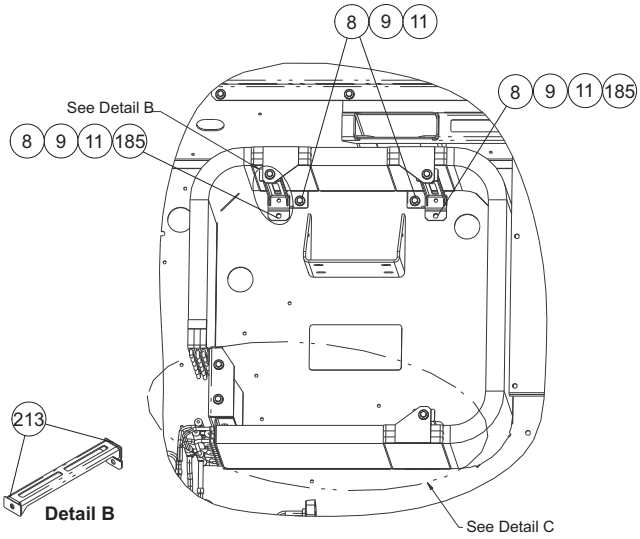

Detail B

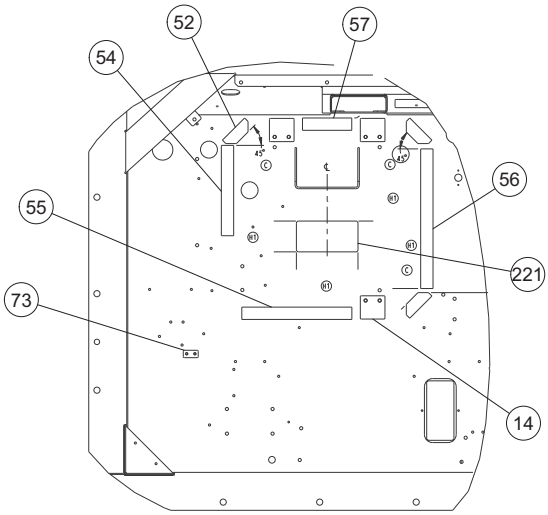

Gaskets On Frame

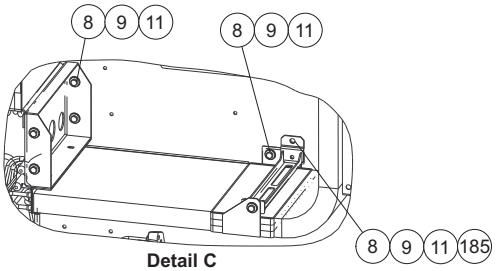

Detail C

8 Gas Cooler / Condenser Assembly, with WCC (PID NT5002)

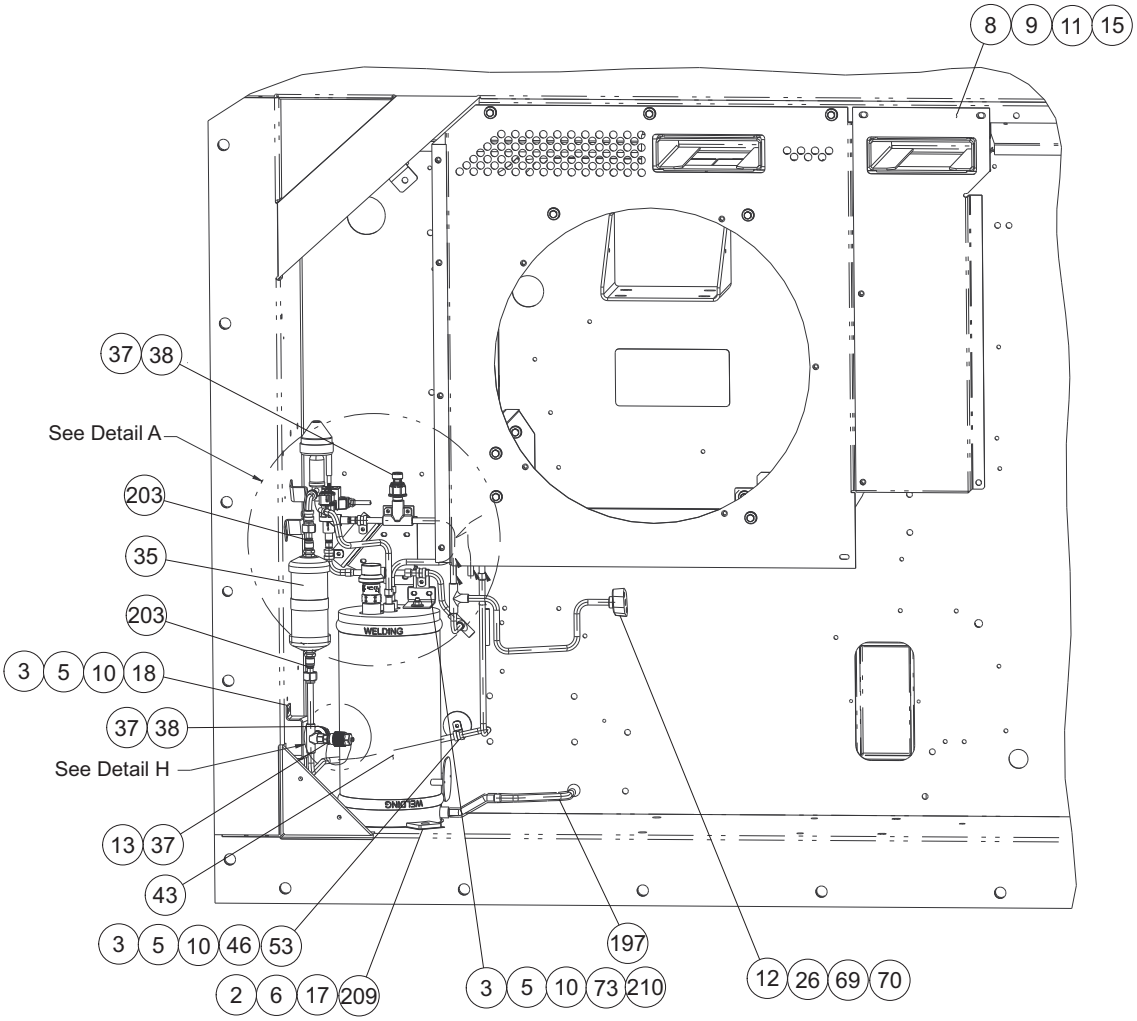

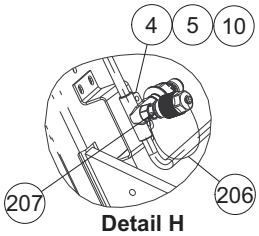

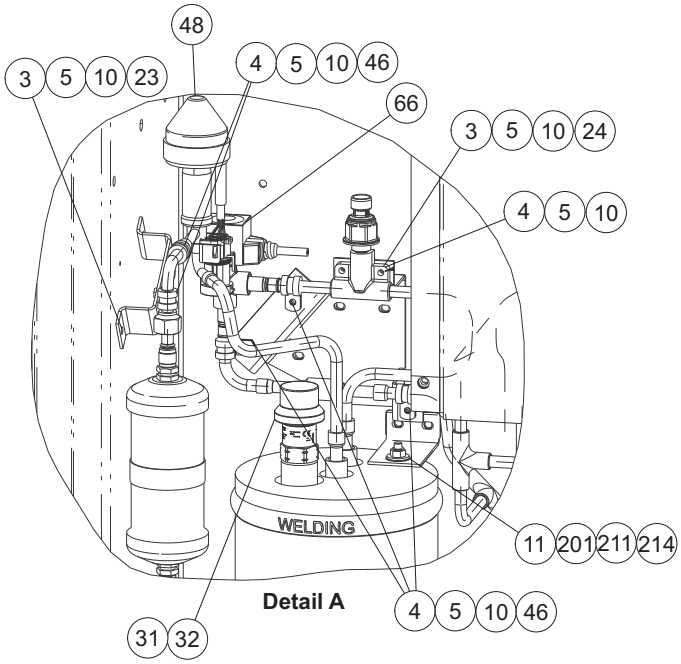

8 Gas Cooler / Condenser Assembly, with WCC (PID NT5002)

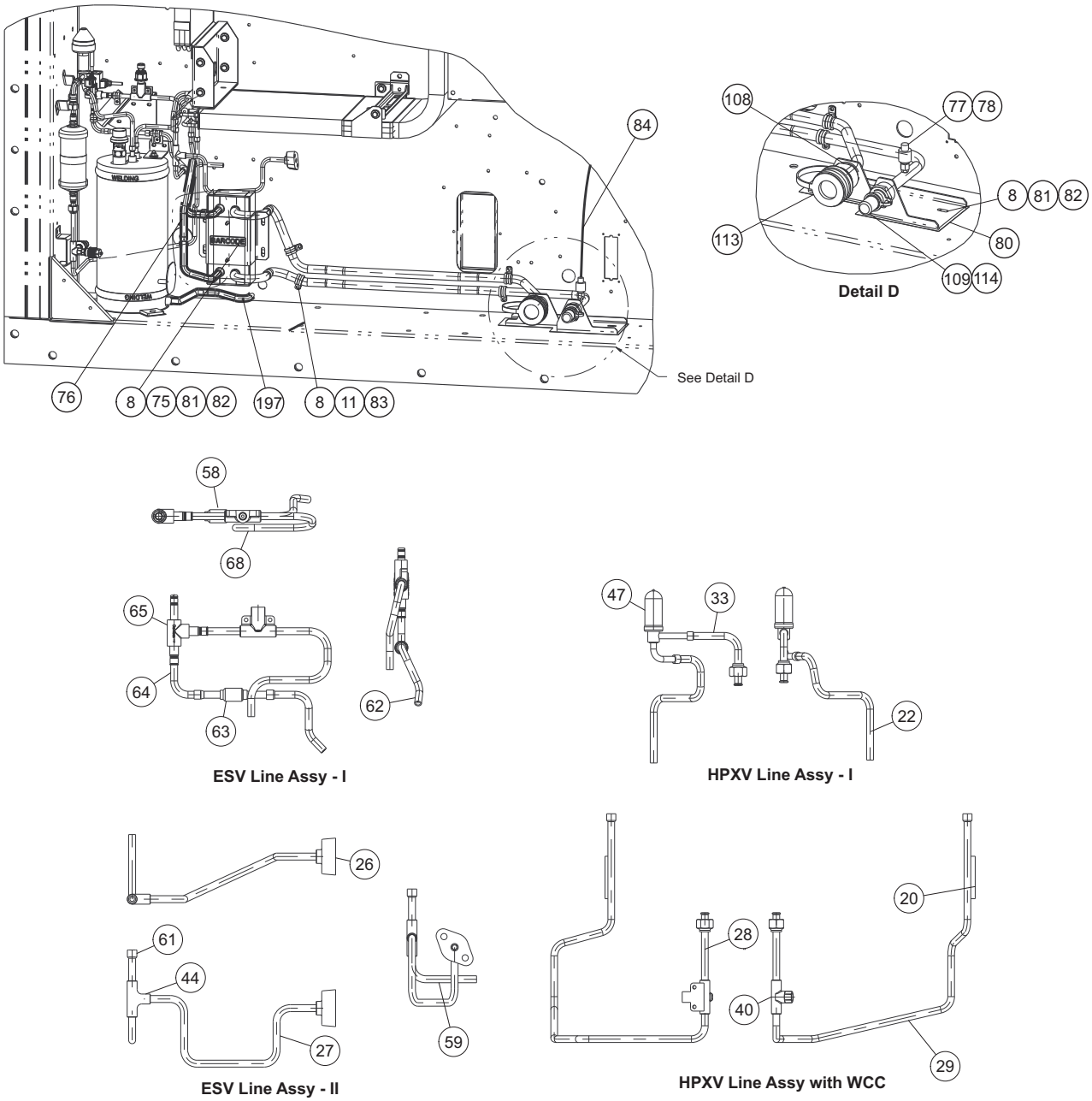

Item	Part Number	Description	Qty
1	81-04258-20	Coil Assembly	1
2	34-06053-02	Washer	3
3	66-U---1--5371-7	Screw, Machine Hex Head	16
4	66-U---1--5371-6	Screw, Machine Hex Head	9
5	66-U---1--5321-8	Washer, Plain	26
6	66-U---1--5361-39	Screw, Cap Hex Head	3
8	66-U---1--5361-25	Screw, Cap Hex Head	35
9	66-U---1--5321-7	Washer, Plain	21
10	34-06053-05	Washer	25
11	34-06053-00	Washer	29
12	66-U---1--5321-4	Washer, Plain	2

8 Gas Cooler / Condenser Assembly, with WCC (PID NT5002)			
13	40-00709-00	High Side (Discharge) Service Valve	1
14	58-04910-19	Protector	3
15	68-17821-01	Cover	1
17	58-04026-135	Protector	1
18	68-16335-01	Bracket	1
20	56-08645-00	Tube	1
22	56-09334-00	Tube	1
23	68-16409-01	Bracket	1
24	68-17825-00	Bracket	1
25	79-04206-00	Cover Assembly - Includes:	1
	68-18295-00	Cover	1
	42-66647-08	Gasket	1
	42-66647-01	Gasket	1
	42-66647-09	Gasket	1
	42-66647-03	Gasket	1
	58-04910-13	Protector	2
	42-00465-03	Gasket	1
	58-04910-14	Protector	1
	42-66647-00	Gasket	3
26	40-00707-01	Flange	1
27	56-09378-00	Tube	1
28	56-09332-00	Tube	1
29	56-09472-00	Tube	1
31	42-00805-03	O-Ring	1
32	76-00892-01	Flash Tank Pressure Relief Valve (FTPRV) Service Kit - Includes:	1
	14-00407-03	Valve, Relief	1
	42-00805-03	O-Ring	1
	46-00058-00	Lubricant	1
33	56-09331-00	Tube	1
35	14-00406-01	Filter Drier	1
	14-00406-04	Filter Drier (only for system clean out after burnout)	1
37	42-00805-00	O-Ring	3
38	76-00892-07	Flash Tank Pressure Transducer (FPT) Service Kit - Includes:	2
	12-00688-03	Transducer	1
	42-00805-00	O-Ring	1
	46-00058-00	Lubricant	1
40	40-00701-01	Fitting	1
43	65-00214-00	Flash Tank Receiver Assembly	1
44	40-00772-01	Tee	1
46	44-00370-02	Clamp, Cushioned	6
47	14-00396-00	High Pressure Expansion Valve (HPXV)	1
48	14-00396-10	High Pressure Expansion Valve (HPXV) Coil, 12 VDC	1
52	43-66647-00	Gasket	3
53	34-06295-00	Washer, Fender	1

8 Gas Cooler / Condenser Assembly, with WCC (PID NT5002)			
54	42-66647-01	Gasket	1
55	42-66647-05	Gasket	1
56	42-66647-03	Gasket	1
57	42-66647-04	Gasket	1
58	40-00702-01	Tee	1
59	56-08822-00	Tube	1
61	56-08853-00	Tube	1
62	56-08841-00	Tube	1
63	14-00413-00	Check Valve	1
64	56-08792-00	Tube	1
65	14-00394-01	Economizer Solenoid Valve (ESV)	1
66	14-00394-20	Economizer Solenoid Valve (ESV) Coil	1
68	56-09335-00	Tube	1
69	42-00726-00	Gasket	1
70	66-U---1--5361	Screw, Cap Hex Head	2
73	58-04026-118	Protector	1
75	79-04180-20	Brazed Plate Water Cooled Condenser (WCC)	1
76	56-09477-00	Tube	1
77	66-U---2--1132-1	Connector, Electrical	2
78	12-01071-02	Water Pressure Switch	1
80	58-00957-02	Protector	1
81	69NT--35--2692-1	Washer, Fender	7
82	34-06053-03	Washer	7
83	34-00373-59	Clamp, Tube	4
84	58-04321-08	Tube, Slit	1
108	40-66642-00	Socket	1
109	40-66641-00	Plug	1
113	66-U---2--1152	Cap, Dust	1
114	66-U---2--1142	Cap, Dust	1
185	86-04994-00	Bracket	3
197	56-09479-00	Tube	1
201	66-U---1--5321-3	Washer, Plain	4
203	14-00406-20	O-Ring	2
206	58-01097-00	Cord, Nylon	1
207	22-02205-00	Connector	2
209	66-U---1--5321-13	Washer, Plain	3
210	68-17828-00	Bracket	1
211	34-00667-11	Nut, Self Lock	1
213	58-04910-05	Protector	6
214	58-04026-119	Protector	1
217	79-66735-02	Bracket	1
221	58-04026-38	Protector	1

9 Gas Cooler / Condenser Fan and Motor

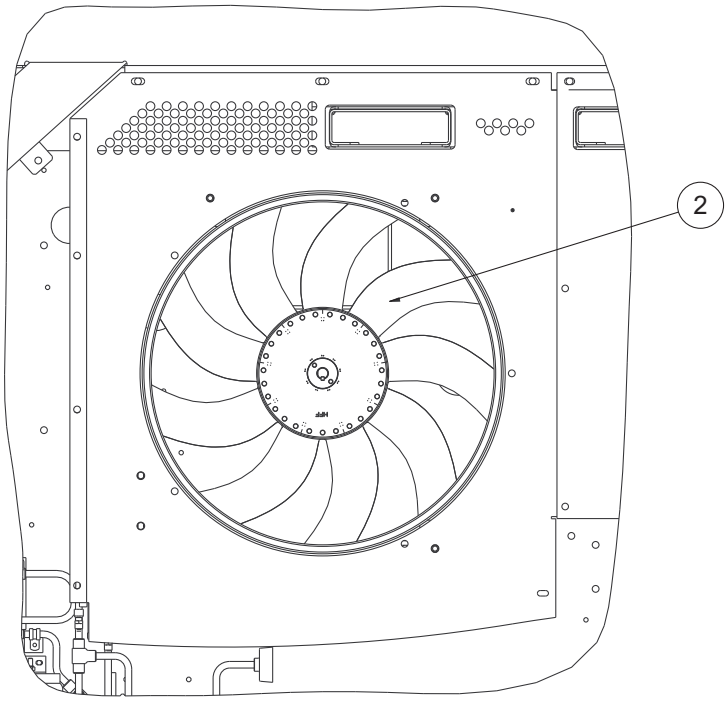

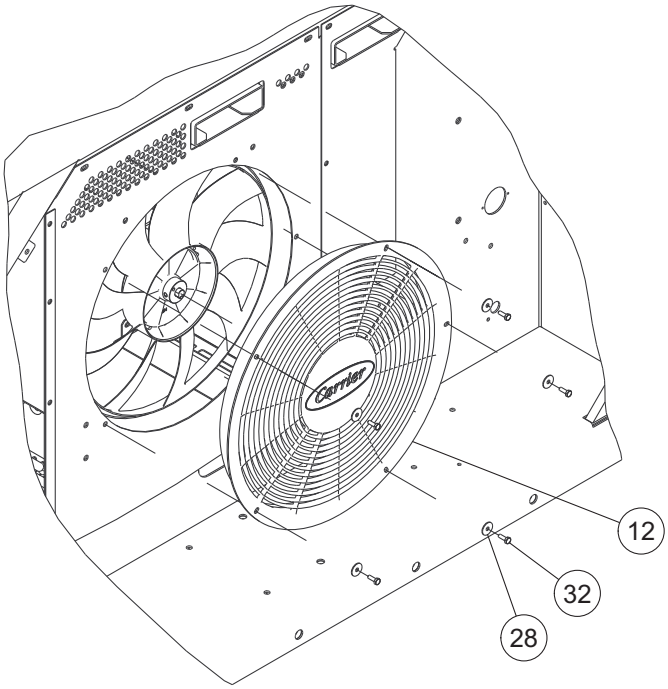

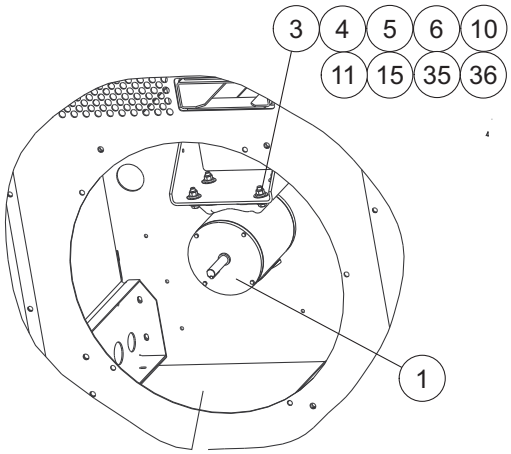

9 Gas Cooler / Condenser Fan and Motor

Item	Part Number	Description	Qty
1	54-00677-20	Gas Cooler Fan Motor	1
2	38-00639-01	Gas Cooler Fan Assembly	1
3	69NT--35--3452	Shim	1
4	34-01181-01	Washer, Flat	8
5	34-00667-12	Nut, Self Lock	4
6	66-U---1--5361	Screw, Cap Hex Head	4
10	69NT--35--3452-1	Shim	1
11	58-04026-113	Protector	2
12	58-04980-00	Grille	1
15	34-06053-02	Washer	4
28	69NT--35--2692-1	Washer, Fender	5
32	66-U---1--5361-53	Screw, Cap Hex Head	5
35	69NT--35--3452-2	Shim	1
36	69NT--35--3452-3	Shim	1

10 Evaporator Tubing and Coil (PIDs NT5000, NT5001, NT5002, NT5003, NT5004)

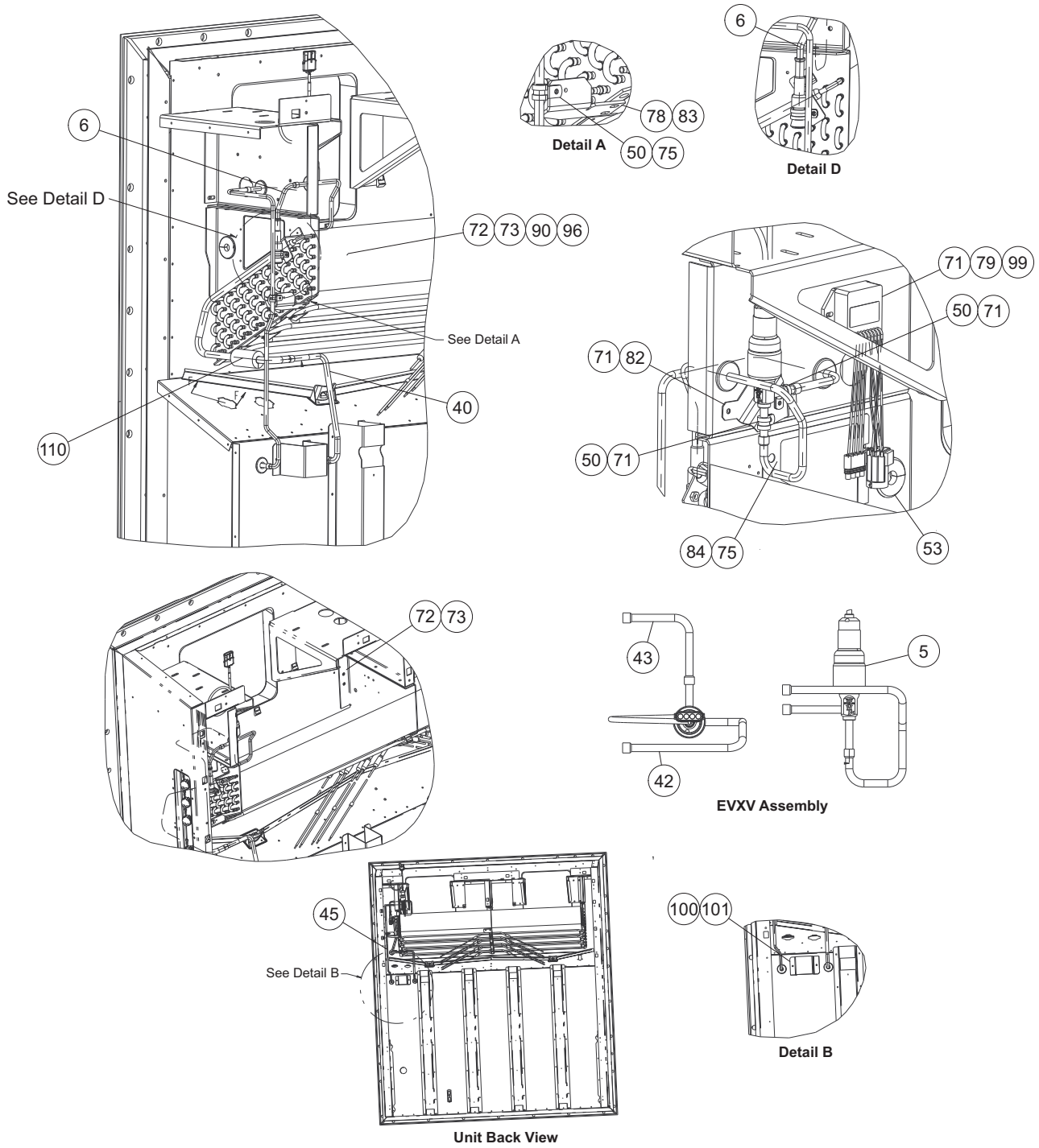

10 Evaporator Tubing and Coil (PIDs NT5000, NT5001, NT5002, NT5003, NT5004)			
Item	**Part Number**	**Description**	**Qty**
5	14-00382-00	Electronic Expansion Valve (EEV)	1
6	56-09382-00	Tube	1
40	56-09344-00	Tube	1
42	56-08921-00	Tube	1
43	56-09112-00	Tube	1
45	56-09445-00	Tube	1
50	44-00370-02	Clamp, Cushioned	3
53	58-04273-00	Grommet	1
71	66-U---1--5371-6	Screw, Machine Hex Head	7
72	66-U---1--5321-3	Washer, Plain	11
73	66-U---1--5361-25	Screw, Cap Hex Head	11
75	66-U---1--5381-1	Screw, Hex Head	4
78	66-U---1--5381-3	Screw, Hex Head Sltd	2
79	66-U---1--5321-8	Washer, Plain	2
82	68-17080-00	Bracket	1
83	68-17578-00	Bracket	1
84	68-16246-00	Plate, Cover	1
90	81-04131-00	Evaporator Coil Assembly	1
96	34-00663-11	Washer, Lock	9
99	10-00388-00	Powerpack Stepper Motor	1
100	68-17640-00	Channel	1
101	34-00928-07	Rivet, Blind	2
110	12-00500-01SV	Evaporator Temperature Sensors (ETS1 / ETS2)	1

10 Evaporator Tubing and Coil (PIDs NT5010, NT5011, NT5103)

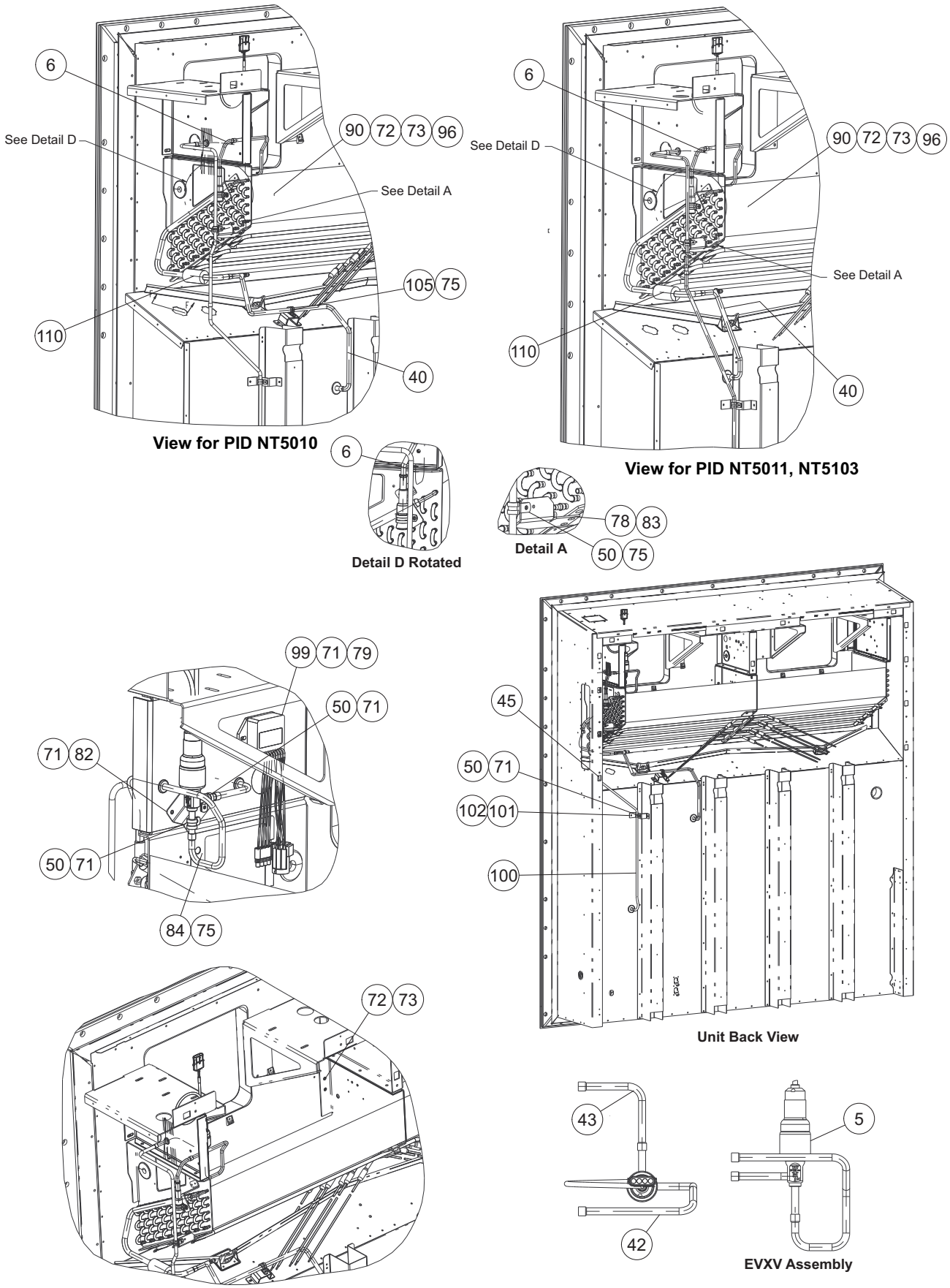

10 Evaporator Tubing and Coil (PIDs NT5010, NT5011, NT5103)

Item	Part Number	Description	Qty
5	14-00382-00	Electronic Expansion Valve (EEV)	1
6	56-09639-00	Tube	1
40	56-09705-00	Tube (PID NT5010)	1
	56-09638-00	Tube (PID NT5011, NT5103)	1
42	56-09632-00	Tube	1
43	56-09633-00	Tube	1
45	56-09640-00	Tube	1
50	44-00370-02	Clamp, Cushioned	4
71	66-U---1--5371-6	Screw, Machine Hex Head	7
72	66-U---1--5321-3	Washer, Plain	11
73	66-U---1--5361-25	Screw, Cap Hex Head	11
75	66-U---1--5381-1	Screw, Hex Head	5
78	66-U---1--5381-3	Screw, Hex Head Sltd	2
79	66-U---1--5321-8	Washer, Plain	2
82	68-18699-00	Bracket	1
83	68-17578-00	Bracket	1
84	68-16246-00	Plate, Cover	1
90	81-04131-00	Evaporator Coil Assembly (PID NT5010, NT5011)	1
	81-04359-00	Evaporator Coil Assembly (PID NT5103)	1
96	34-00663-11	Washer, Lock	9
99	10-00388-00	Stepper Motor (PID NT5010, NT5011)	1
	10-00563-00	Stepper Motor (PID NT5103)	
100	56-09672-00	Tube	1
101	68-18031-00	Bracket (PID NT5010)	1
102	34-00928-07	Rivet, Blind (PID NT5010)	2
105	44-00370-03	Clamp, Cushioned (PID NT5010)	1
110	12-00500-01SV	Evaporator Temperature Sensors (ETS1 / ETS2)	1

11 Evaporator Fan and Motor (PIDs NT5000, NT5001, NT5002, NT5003)

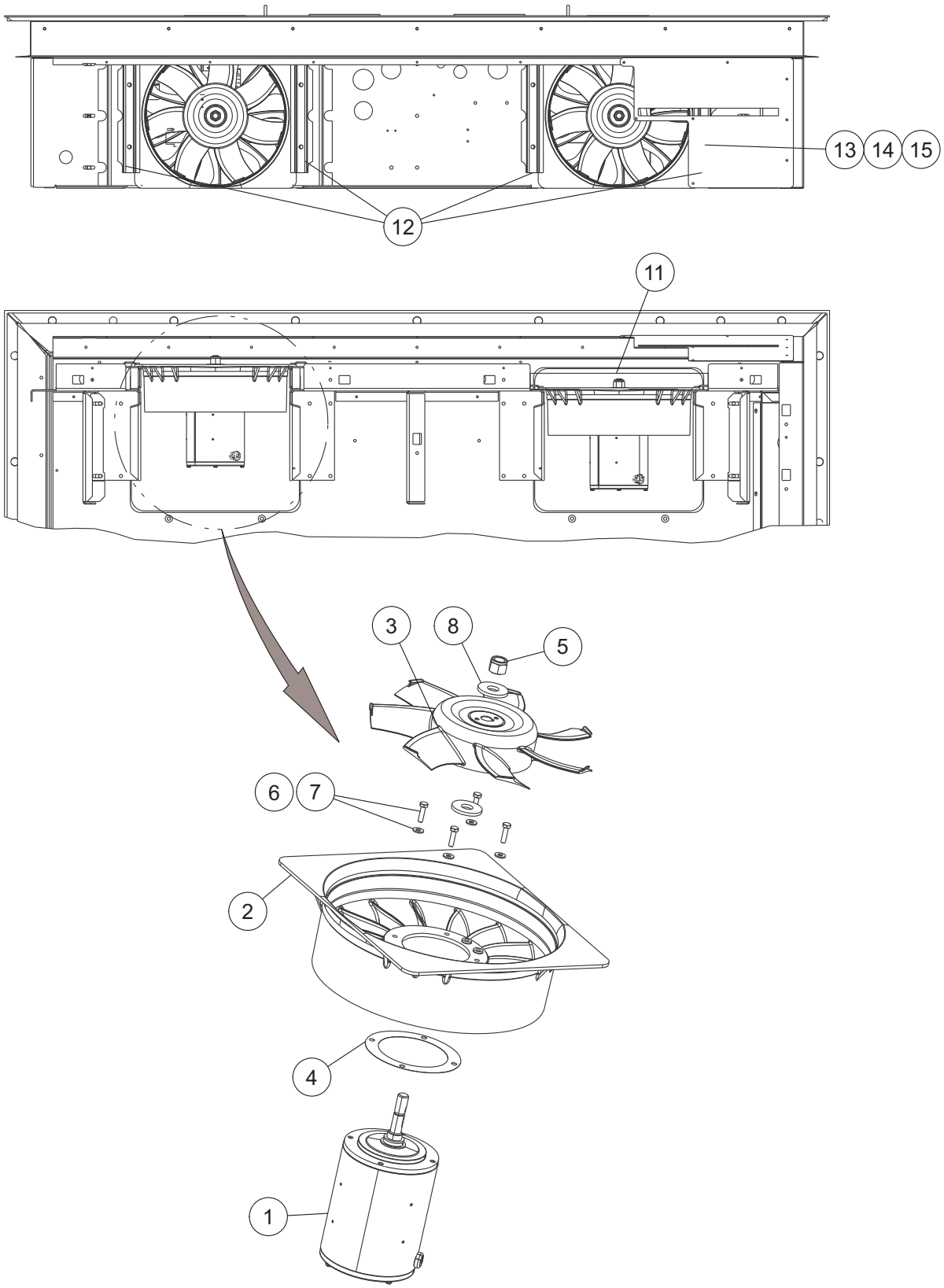

11 Evaporator Fan and Motor (PIDs NT5000, NT5001, NT5002, NT5003)

Item	Part Number	Description	Qty
1	54-00648-20	Evaporator Fan Motor (EM1, EM2)	1
2	48-00413-00	Stator	2
3	38-00626-00	Evaporator Fan	2
4	58-04770-00	Protector	2
5	34-00795-17	Nut, Self Lock	2
6	34-06165-08	Screw, Cap Hex Head	8
7	66-U---1--5321-3	Washer, Plain	8
8	34-00616-06	Washer, Special	4
11	66-U---1--2552-185	Gasket	1
12	69NT--43---295	Bracket Assembly	4
13	34-00655-08	Screw, Cap Hex Head	4
14	34-00663-11	Washer, Lock	4
15	69NT--35--2692-1	Washer, Fender	4

11 Evaporator Fan and Motor (PIDs NT5004, NT5010, NT5011, NT5103)

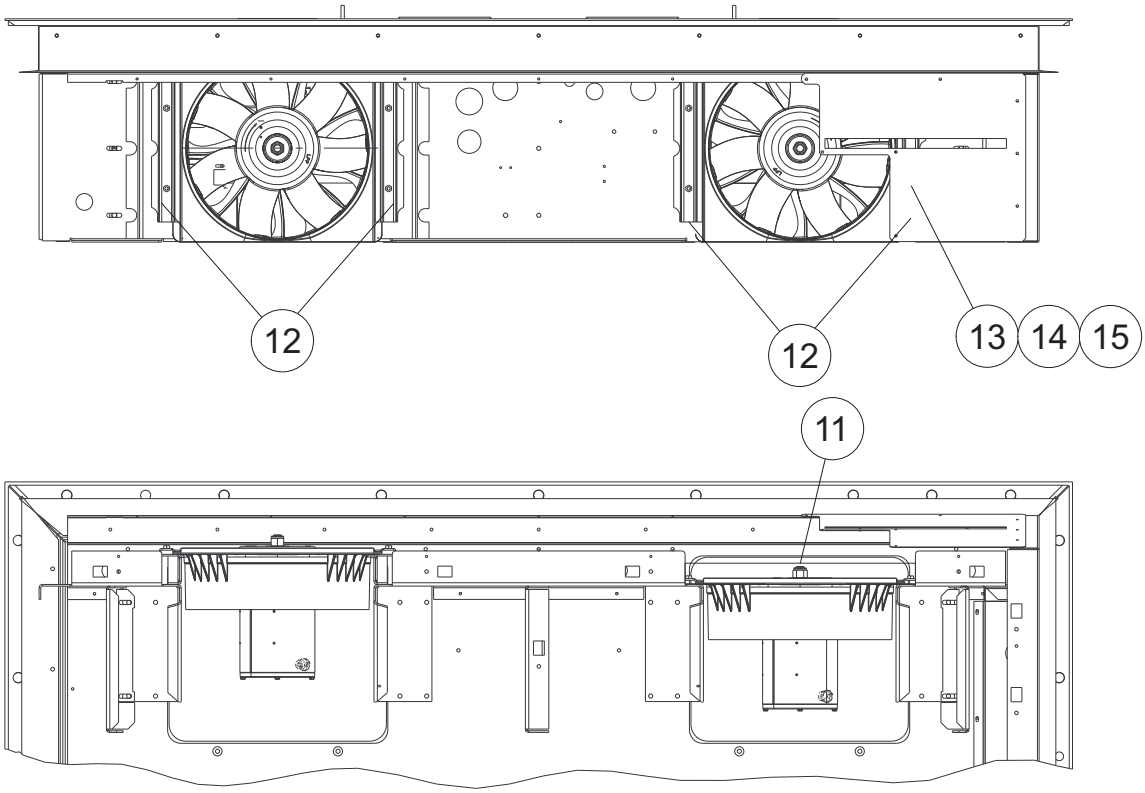

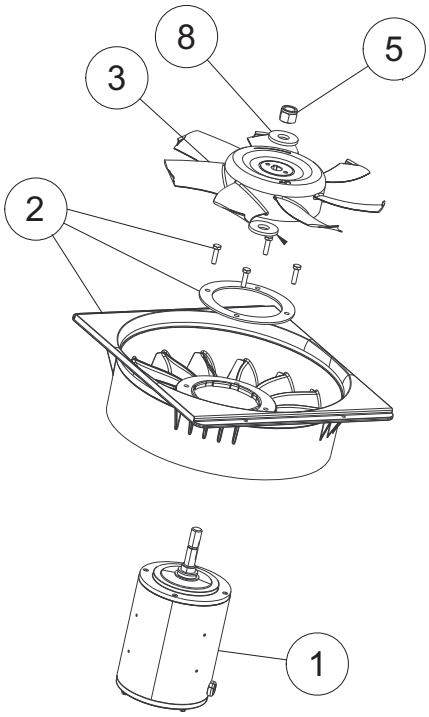

11 Evaporator Fan and Motor (PIDs NT5004, NT5010, NT5011, NT5103)

Item	Part Number	Description	Qty
1	54-00648-20	Evaporator Motor	2
2	76-66683-00	Polymer Stator Kit - Includes Stator, Stator Ring and Cap Screws	2
3	38-00626-00	Evaporator Fan	2
5	34-00795-17	Nut, Self Lock	2
8	34-00616-06	Washer, Special	4
11	66-U---1--2552-185	Gasket	1
12	69NT--43---295	Bracket Assembly	4
13	34-00655-08	Screw, Cap Hex Head	4
	34-00655-08	Screw, Cap Hex Head (NT5103)	8
14	34-00663-11	Washer, Lock	4
	34-00663-11	Washer, Lock (NT5103)	8
15	69NT--35--2692-1	Washer, Fender	4
	69NT--35--2692-1	Washer, Fender (NT5103)	8

12 Drain Kit

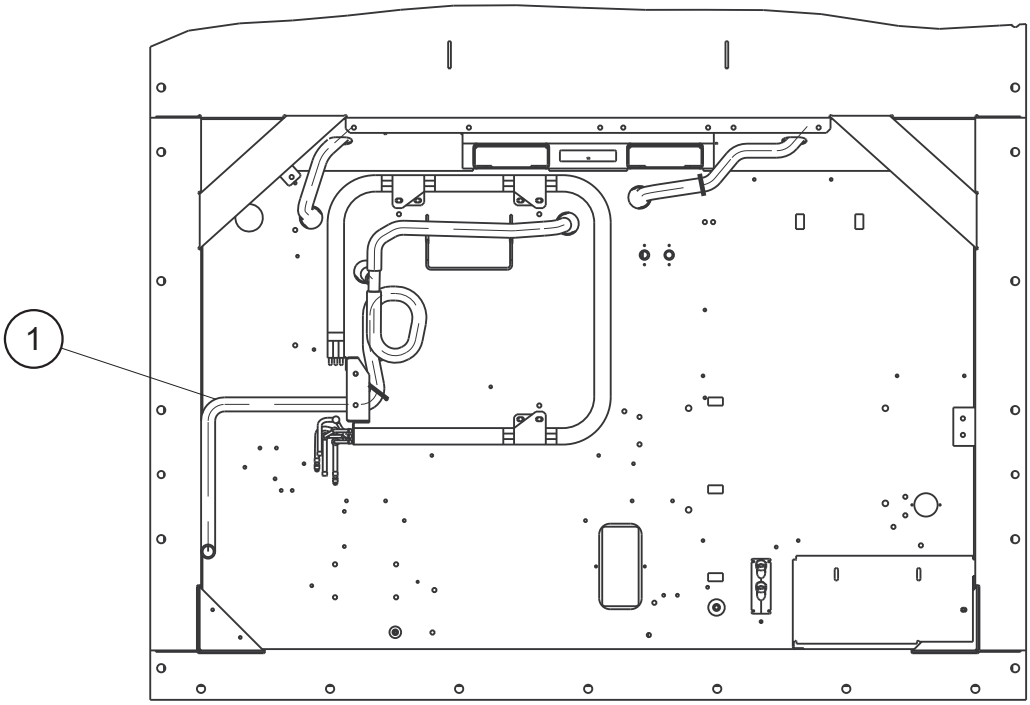

Item	Part Number	Description	Qty
1	58-04539-15	Tube, Flexible	1

13 Heater Kit

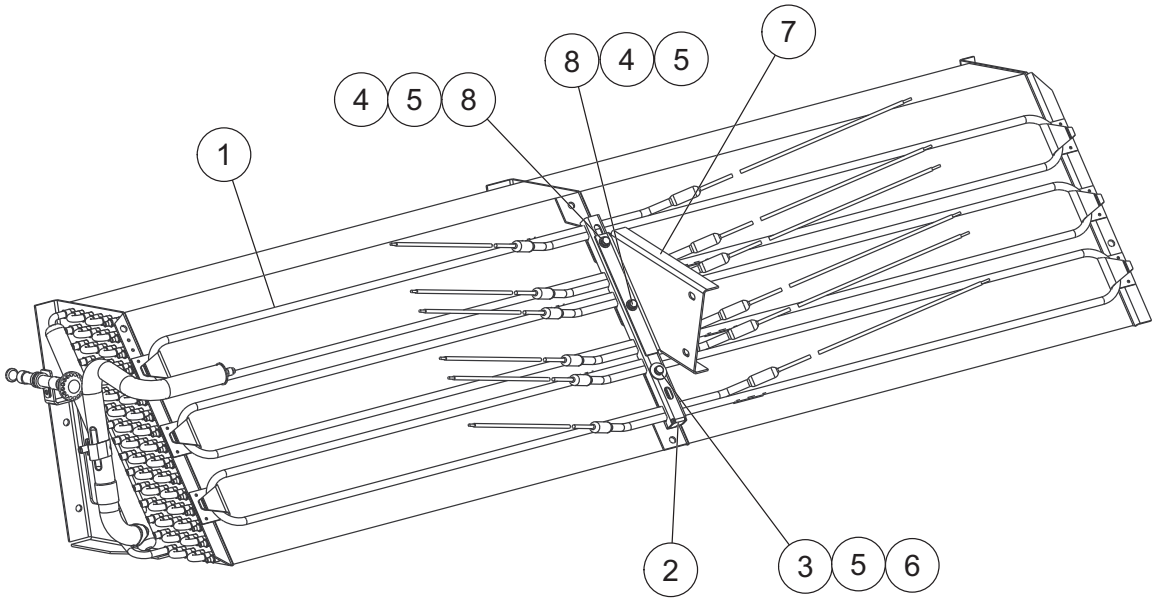

Item	Part Number	Description	Qty
1	24-00006-20	Heater	6
2	86-04956-00	Retainer Assembly	1
3	69NT--35--2692-1	Washer, Fender	1
4	66-U---1--5361-11	Screw, Cap Hex Head	2
5	34-00663-11	Washer, Lock	3
6	34-00655-10	Screw, Cap Hex Head	1
7	68-18032-00	Bracket	1
8	66-U---1--5321-3	Washer, Plain	4

14 Humidity Kit

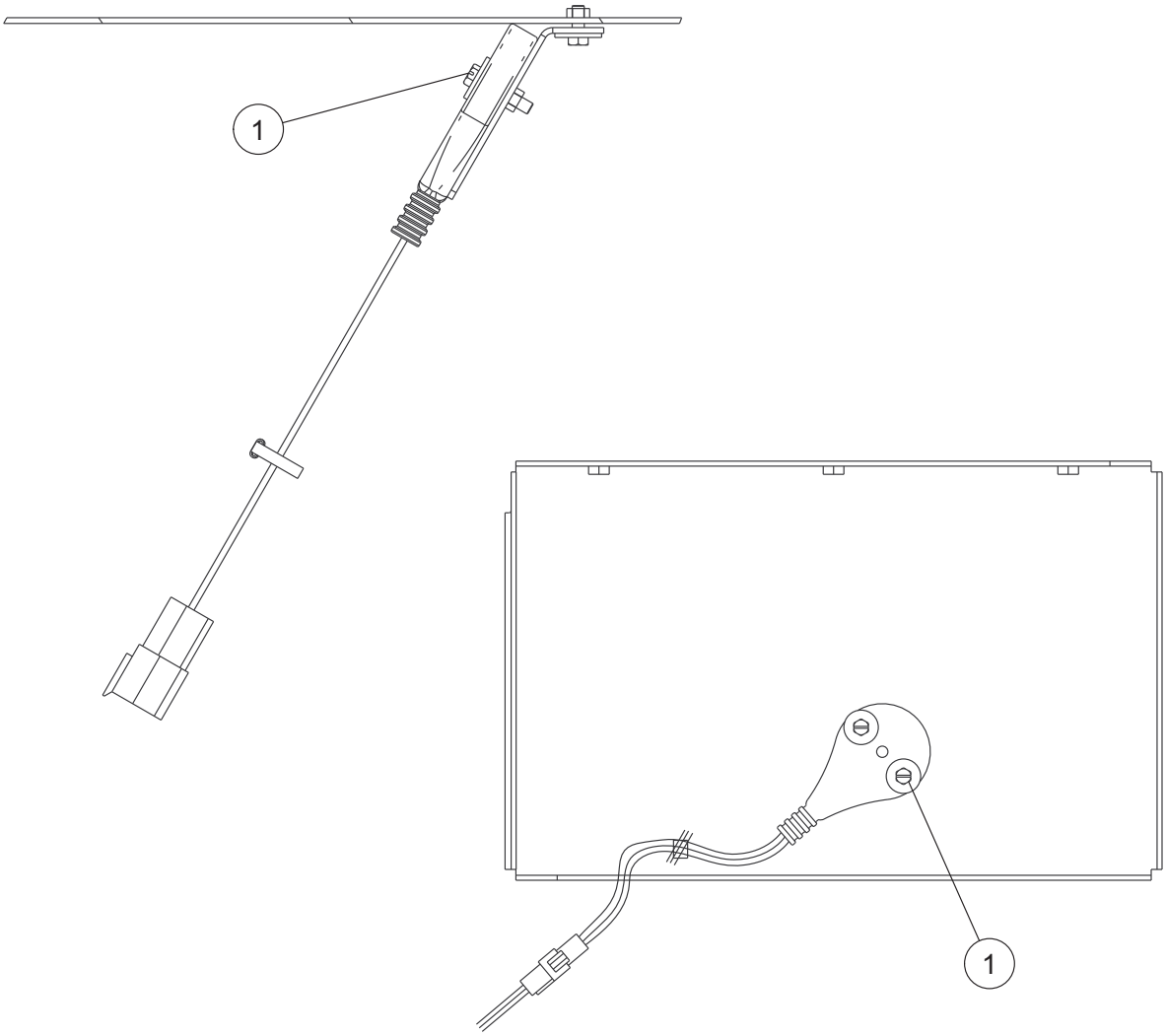

Item	Part Number	Description	Qty
1	76-00675-04	Humidity Sensor (HS) Assembly Kit, Includes 76-66694-00	1
	76-66694-00	Humidity Sensor (HS) Kit, Sensor and Bracket only	1

15 USDA Section

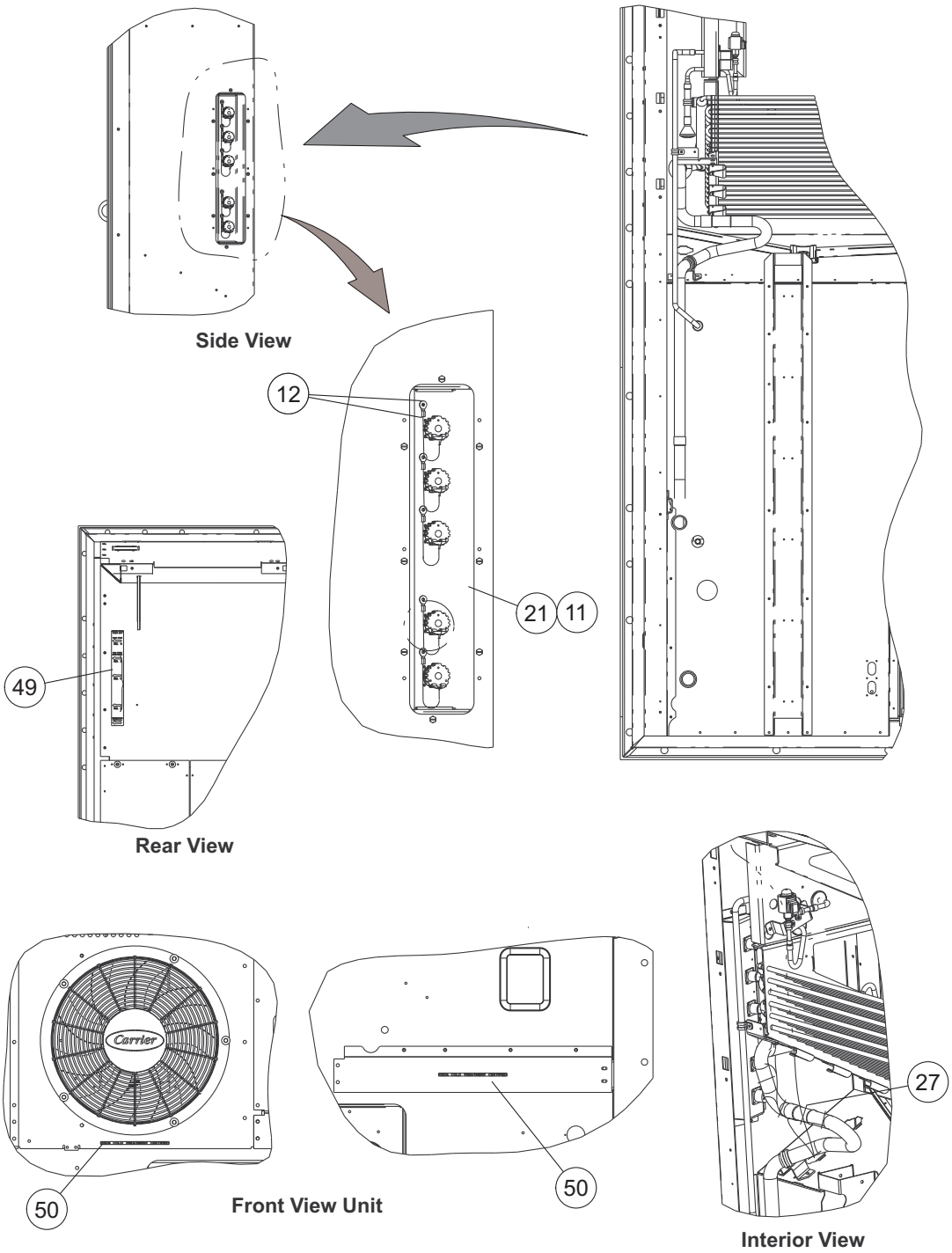

Item	Part Number	Description	Qty
11	66-U---1--5371-7	Screw, Mach Hex Head	8
12	34-06142-00	Rivet	25
21	79-66775-00	Panel Assembly	1
27	66-U---1--3882	Wire Tie	4
49	62-11729-00	Label	1
50	62-11275-00	Label	1

16 Frame Kit

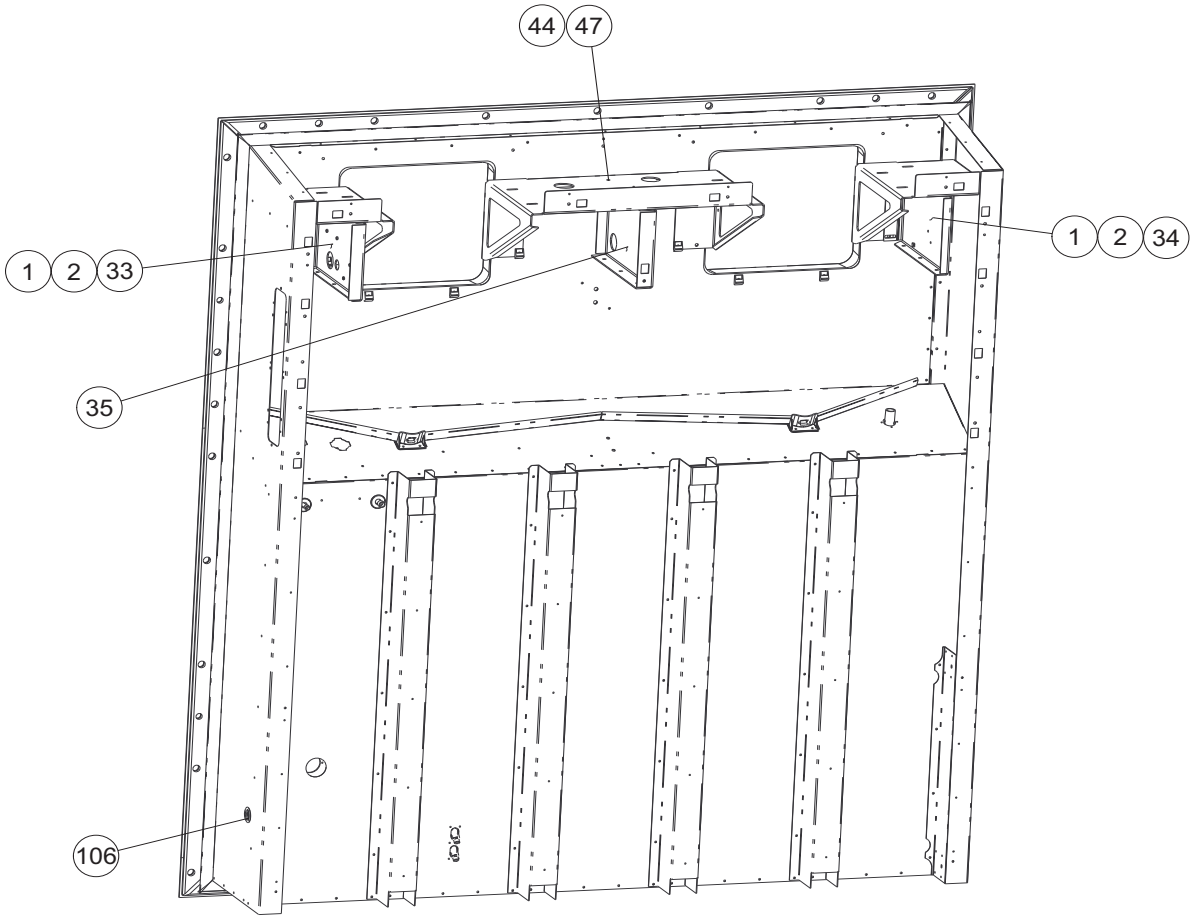

Item	Part Number	Description	Qty
1	69NT--35--2692-1	Washer, Fender	4
2	34-00655-10	Screw, Cap Hex Head	4
33	68-17940-00	Panel Assembly (PIDs NT5000 to NT5004)	1
	68-18693-00	Panel Assembly (PIDs NT5010, NT5011, NT5103)	1
34	79-66747-00	Panel Assembly	1
35	68-17145-00	Panel Assembly	1
44	66-U---1--5321-3	Washer, Plain	9
47	66-U---1--5361-25	Screw, Cap Hex Head	9
106	66-U---1--5562-2	Plug, Button	1

17 Frame Assembly

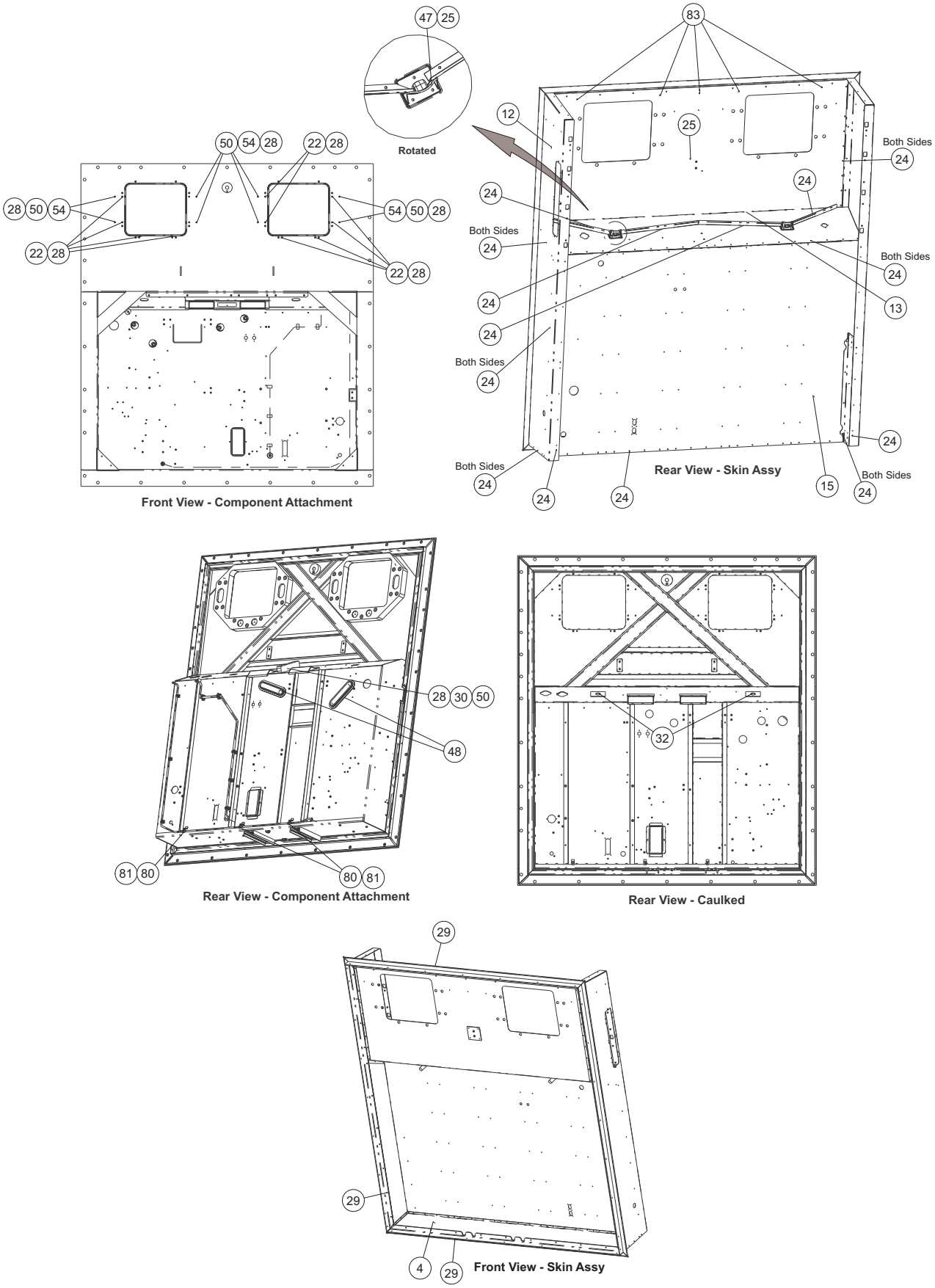

17 Frame Assembly

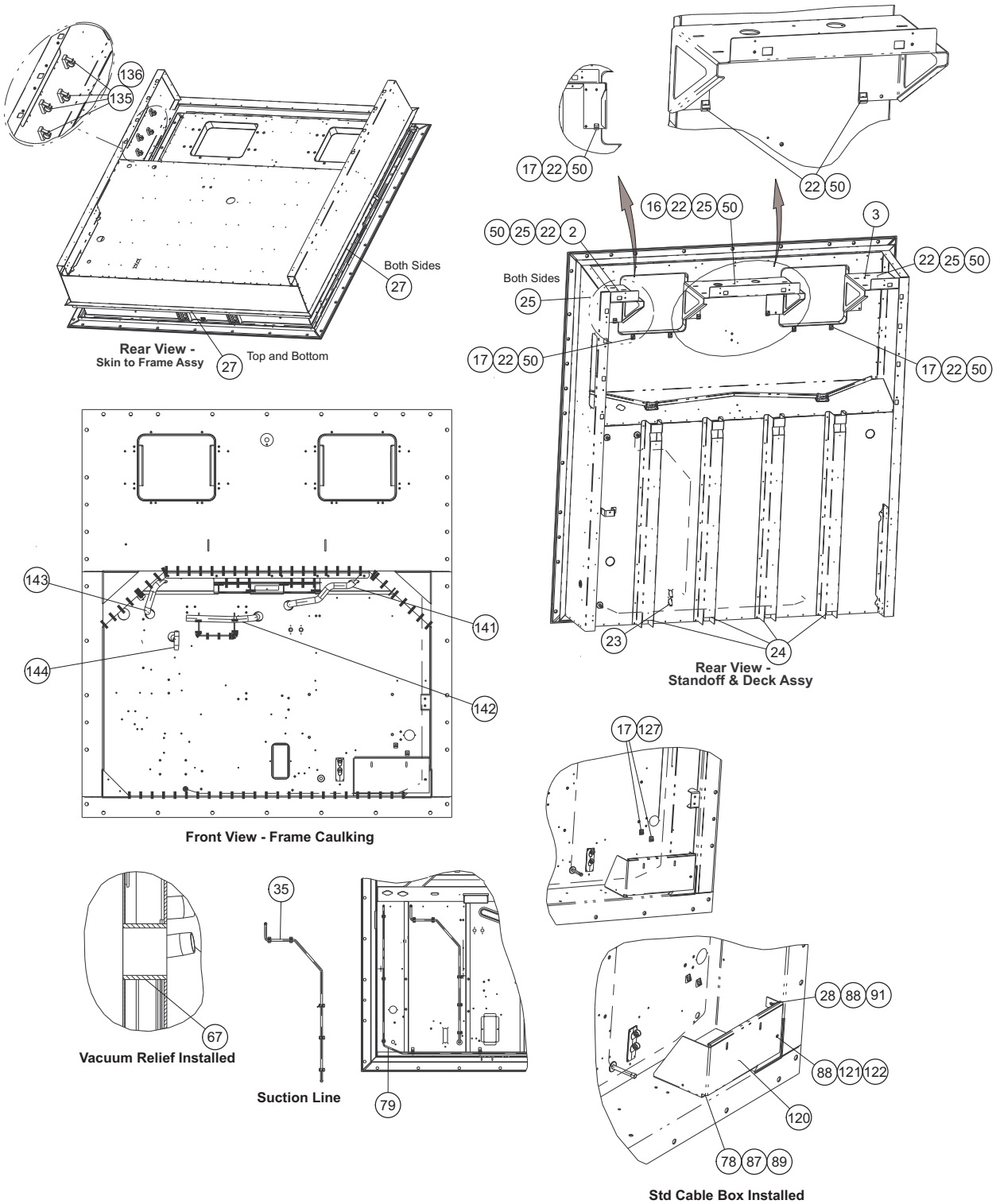

Item	Part Number	Description	Qty
2	68-16696-05	Fan Deck	1
3	68-16697-04	Fan Deck	1
4	68-18138-00	Panel, Bottom	1
12	68-86307-00	Channel	1
13	68-17960-07	Panel	1

17 Frame Assembly			
15	68-18359-02	Panel, Air Duct	1
16	68-17419-01	Fan Deck Assembly	1
17	69NT--35--2692-1	Washer, Fender	7
22	34-00655-10	Screw, Cap Hxhd	29
23	34-00928-04	Rivet, Blind	6
24	34-00928-07	Rivet, Blind	166
25	34-00928-09	Rivet, Blind	19
27	34-00928-21	Rivet, Blind	32
28	34-06053-00	Washer	22
29	34-06124-00	Rivet	40
30	34-06269-12	Screw, Lag	2
32	42-00570-00	Gasket	2
35	56-09474-00	Tube	1
47	58-04968-00	Fitting	2
48	58-04990-00	Fitting	2
50	66-U---1--5321-3	Washer, Plain	28
54	66-U---1--5361-47	Bolt, Mach Hxhd	8
67	58-66635-00	Collar	1
78	66-U---1--5371-6	Screw, Mach Hxhd	2
79	56-09473-00	Tube	1
80	66-U---1--5371-7	Screw, Mach Hxhd	3
81	44-00370-02	Clamp, Cushioned	3
83	58-04315-00	Base, Mounting	5
87	34-06053-05	Washer	2
88	66-U---1--5321-7	Washer, Plain	2
89	66-U---1--5321-8	Washer, Plain	2
91	66-U---1--5361-25	Screw, Cap Hxhd	1
120	68-17939-00	Guard	1
121	34-00792-07	Screw, Cap Hxhd	1
122	34-06053-15	Washer	1
127	34-00655-06	Screw, Cap Hxhd	2
135	44-00361-01	Clip, Retaining	4
136	34-06124-01	Rivet	4
141	58-04539-17	Tube, Flexible	1
142	58-04539-16	Tube, Flexible	1
143	58-04539-11	Tube, Flexible	1
144	58-04539-10	Tube, Flexible	1

18 Control Box Assembly

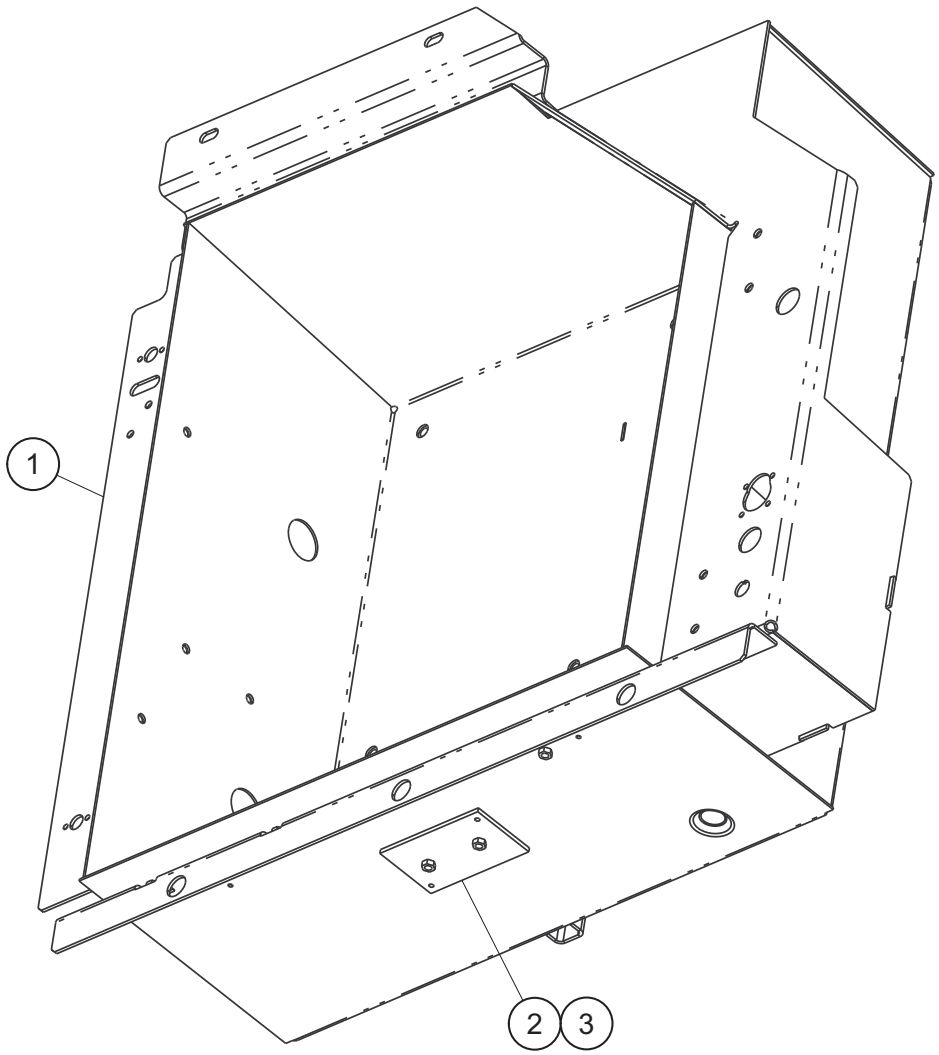

Item	Part Number	Description	Qty
		PIDs NT5001, NT5002	
	79-66720-16	Box Assembly - Includes:	1
1	86-05003-16	Box Assembly, Weld (Maersk RMU)	1
2	68-16498-04	Nut Plate Assembly	1
3	34-00928-20	Rivet, Blind	2
		PIDs NT5003, NT5004, NT5010, NT5011, NT5103	
	79-66720-12	Box Assembly - Includes:	1
1	86-05003-12	Box Assembly, Weld	1
2	68-16498-04	Nut Plate Assembly	1
3	34-00928-20	Rivet, Blind	2

19 Control Box Hardware Kit

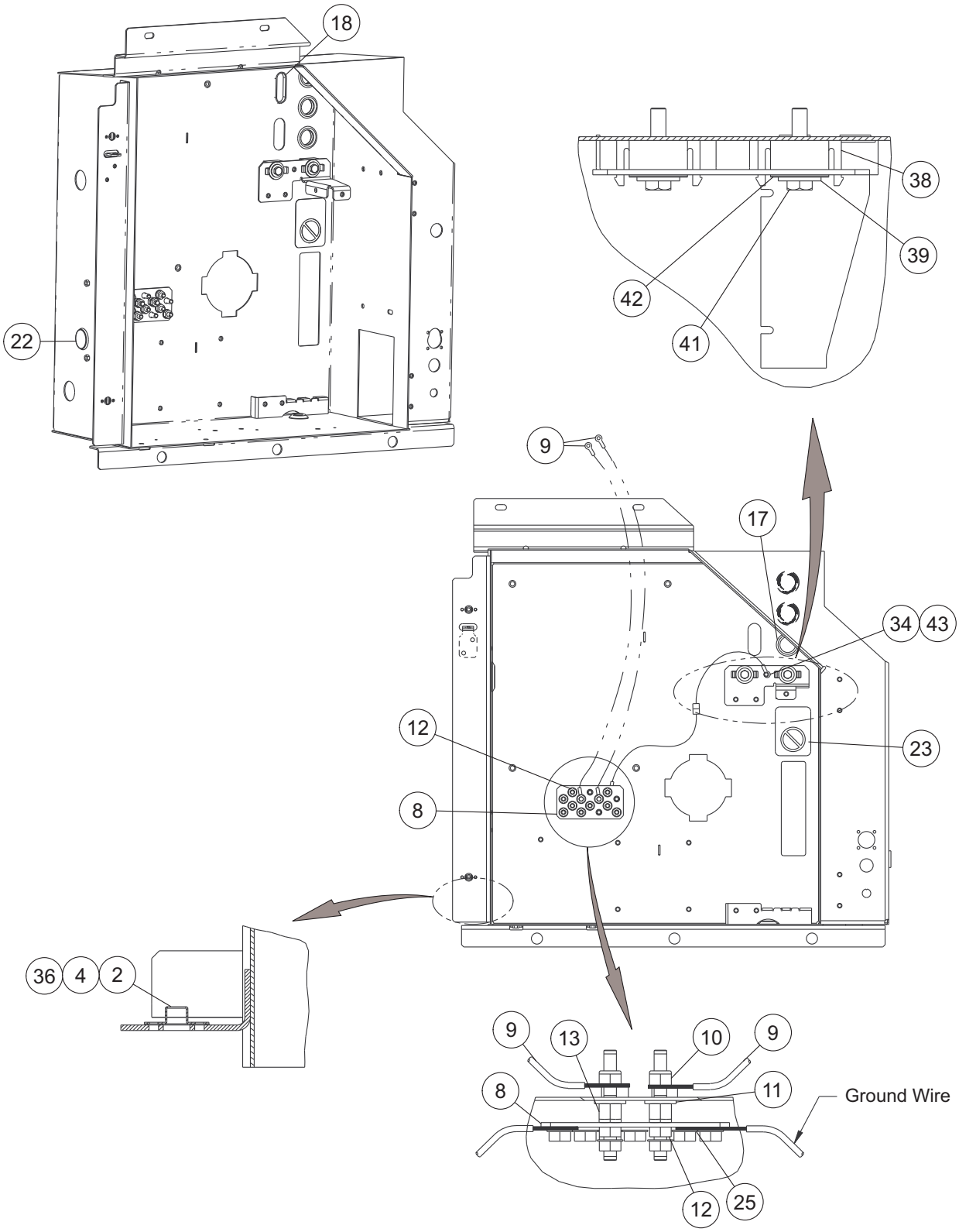

19 Control Box Hardware Kit

Item	Part Number	Description	Qty
2	34-01142-01	Receptacle	2
4	34-00928-01	Rivet, Blind	4
8	68-86230-00	Strap Assembly	1
9	22-66697-24	Wire Assembly	1
10	34-00667-11	Nut, Self Lock	2
11	66-U---1--5321-3	Washer, Plain	2
12	--AT--39JA-171	Nut, Hex	13
13	66-U---1--9592-13	Standoff	2
17	58-00701-03	Plug, Button	3
18	58-04680-00	Plug, Button	1
22	66-U---1--5562-7	Plug, Button	1
23	62-10911-00	Label, Warning	1
25	--AU--27JR-171	Washer, Lock	11
34	66-U---1--5371-7	Screw, Mach Hex Head	1
36	58-04026-32	Protector	2
38	58-66689-00	Spacer	2
39	66-U---1--5321-7	Washer, Plain	2
41	34-00655-10	Screw, Cap Hex Head	2
42	34-06053-03	Washer	4
43	66-U---1--5321-8	Washer, Plain	1

20 Controller Kit (PIDs NT5000, NT5001, NT5002, NT5003, NT5004)

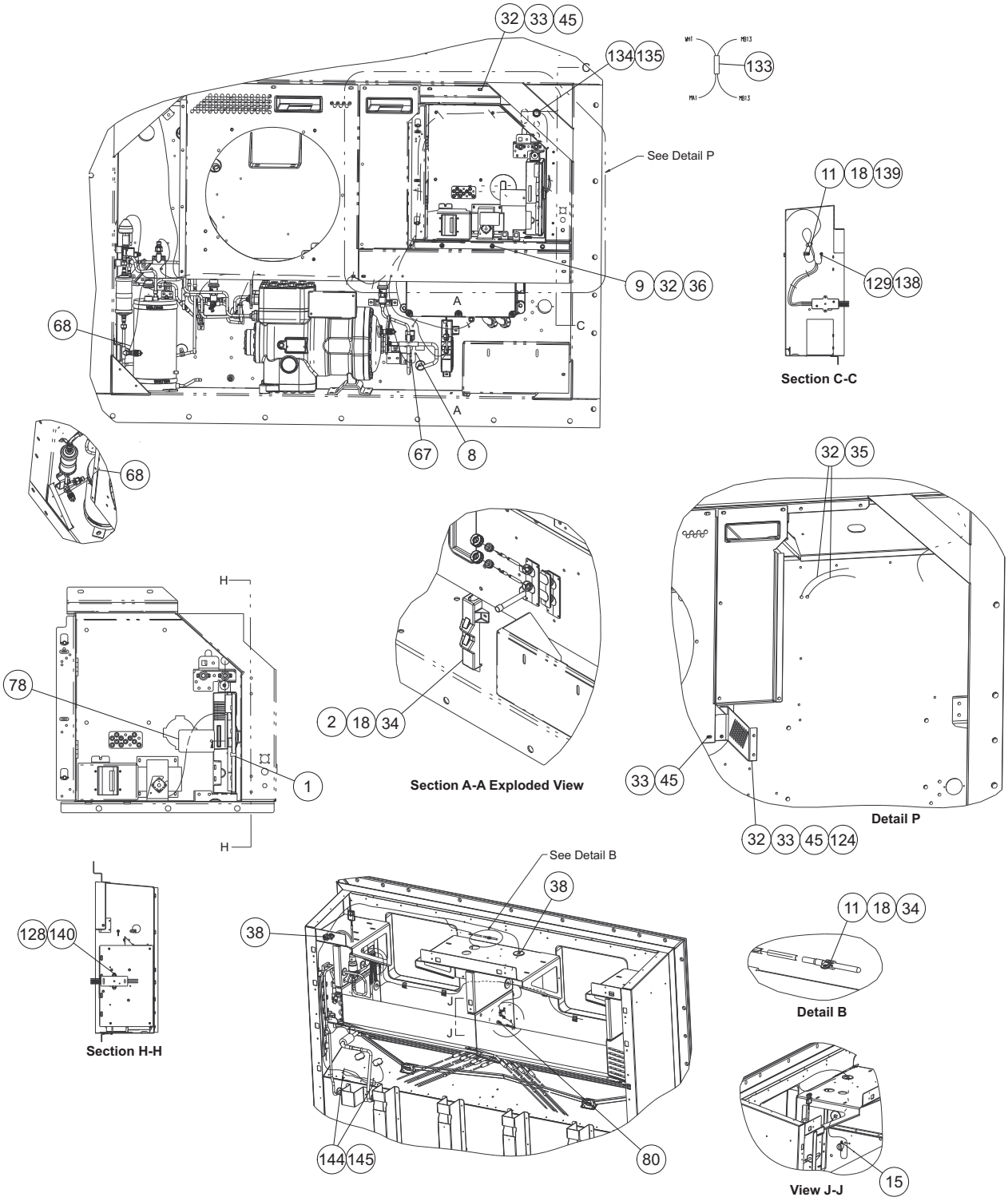

20 Controller Kit (PIDs NT5000, NT5001, NT5002, NT5003, NT5004)

Item	Part Number	Description	Qty
1	12-55013	Controller, ML3, Unconfigured	1
2	58-04279-00	Cover	1
8	66-U---1--5371-6	Screw, Mach Hxhd	1
9	34-06053-03	Washer	3
11	44-01041-04	Clamp, Cushioned	2
15	34-01178-22	Screw, Tc Hxhd	2
18	66-U---1--5371-7	Screw, Mach Hxhd	6
32	66-U---1--5361-25	Screw, Cap Hxhd	10
33	66-U---1--5321-7	Washer, Plain	8
34	66-U---1--5321-8	Washer, Plain	3
35	--AU--27JR-171	Washer, Lock	3
36	69NT--35--2692-1	Washer, Fender	3
38	58-04273-00	Grommet	2
45	34-06053-00	Washer	6
67	58-00849-03	Tube, Slit	1
68	58-00849-02	Tube, Slit	1
78	62-11270-25	Label, Warning	1
80	34-01178-23	Screw, Tc Hxhd	1
124	68-17810-00	Bracket	1
128	22-04214-02	Module	1
129	66-U---1--5371	Screw, Mach Hxhd	1
133	66-U---1--2583-43	Tube	1
134	22-02319-12	Connector	1
135	22-02319-13	Nut, Lock	1
138	34-06354-00	Washer, Lock	1
139	66-U---1--5321-2	Washer, Plain	1
140	34-06355-00	Screw	2
144	58-04246-00	Ty-Rap Base	2
145	34-00928-13	Rivet, Blind	2

20 Controller Kit (PIDs NT5010, NT5011)

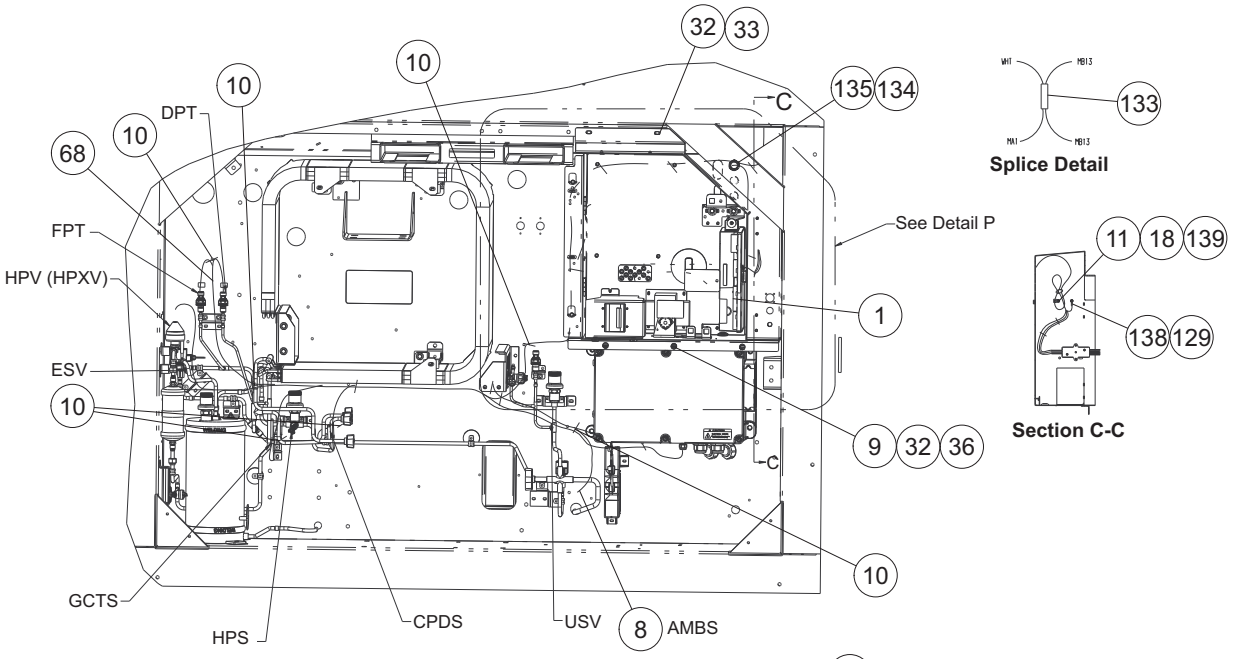

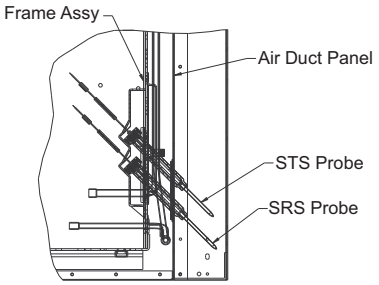

Section A-A

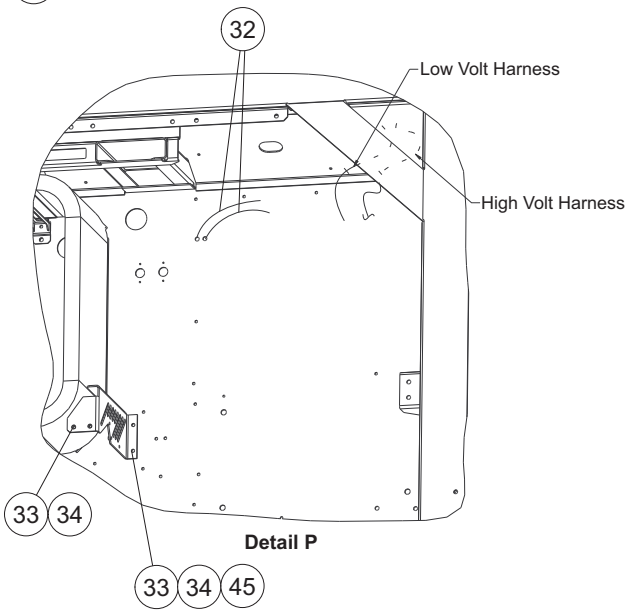

Detail P

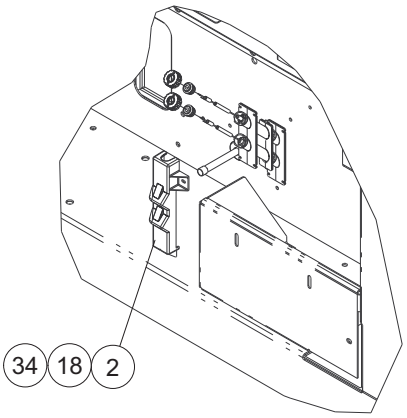

Section A-A Exploded View

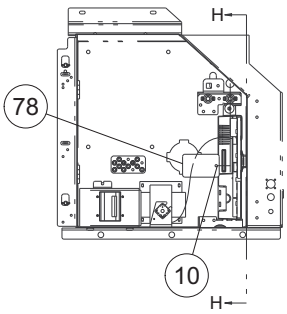

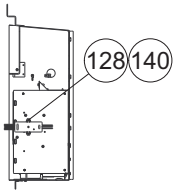

Section H-H

20 Controller Kit (PIDs NT5010, NT5011)

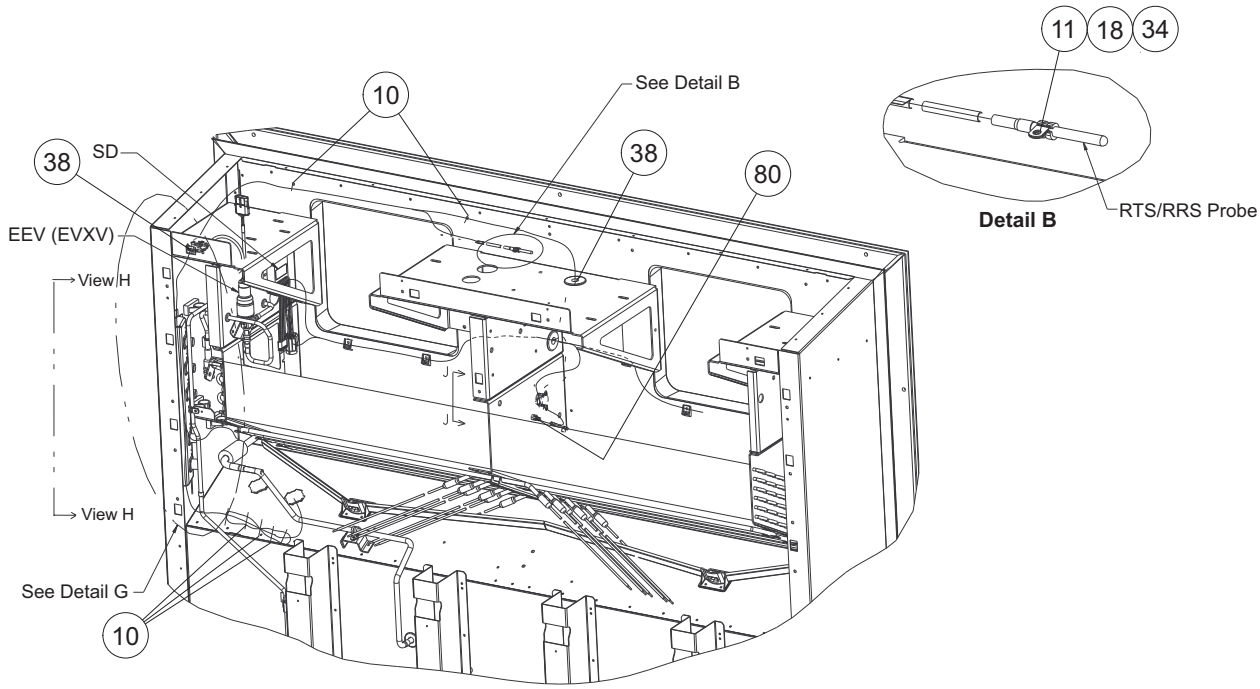

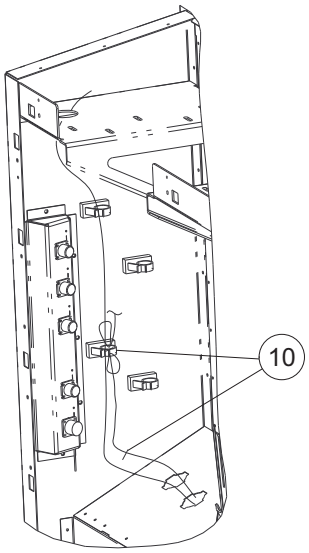

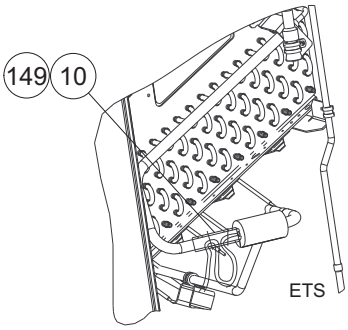

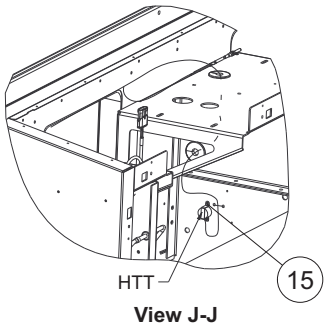

20 Controller Kit (PIDs NT5010, NT5011)

Item	Part Number	Description	Qty
1	12-55013	Controller, ML3, Unconfigured	1
2	58-04279-00	Cover	1
8	66-U---1--5371-6	Screw, Mach Hxhd	1
9	34-06053-03	Washer	3
10	66-U---1--3882	Wire Tie	50
11	44-01041-04	Clamp, Cushioned	2
15	34-01178-22	Screw, Tc Hxhd	2
18	66-U---1--5371-7	Screw, Mach Hxhd	6
32	66-U---1--5361-25	Screw, Cap Hxhd	10
33	66-U---1--5321-7	Washer, Plain	8
34	66-U---1--5321-8	Washer, Plain	3
35	--AU--27JR-171	Washer, Lock	3
36	69NT--35--2692-1	Washer, Fender	3
38	58-04273-00	Grommet	2
45	34-06053-00	Washer	6
68	58-00849-02	Tube, Slit	1
78	62-11270-25	Label, Warning	1
80	34-01178-23	Screw, TC Hxhd	1
124	68-86446-00	Bracket	1
128	22-04214-02	Module	1
129	66-U---1--5371	Screw, Mach Hxhd	1
133	66-U---1--2583-43	Tube	1
134	22-02319-12	Connector	1
135	22-02319-13	Nut, Lock	1
138	34-06354-00	Washer, Lock	1
139	66-U---1--5321-2	Washer, Plain	1
140	34-06355-00	Screw	2

20 Controller Kit (PID NT5103)

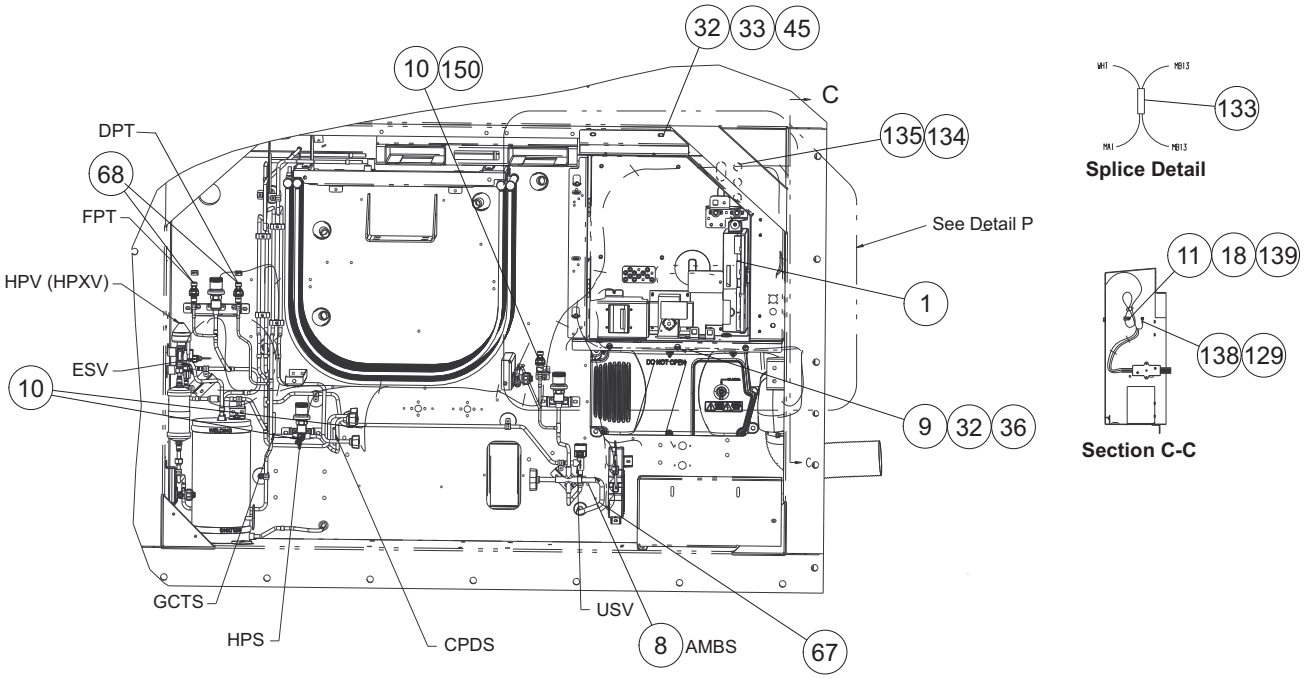

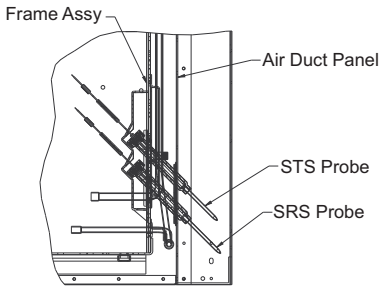

Section A-A

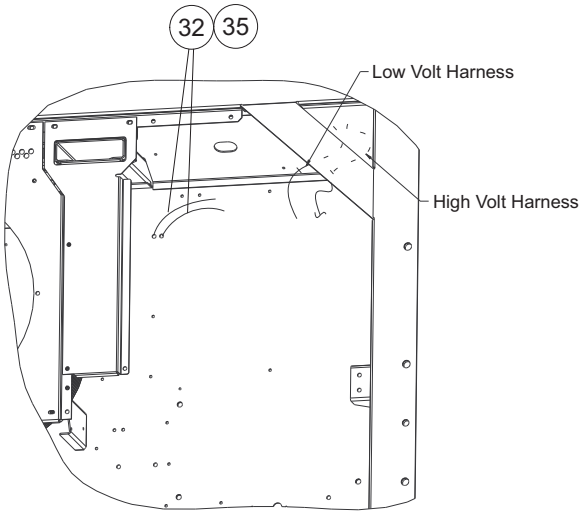

Detail P

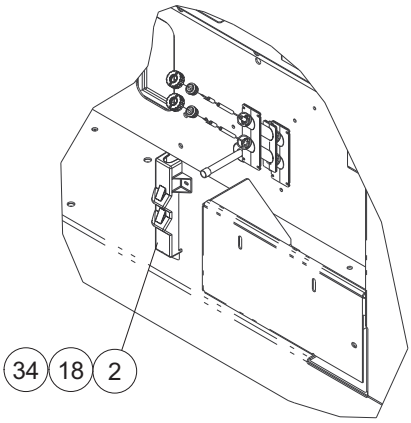

Section A-A Exploded View

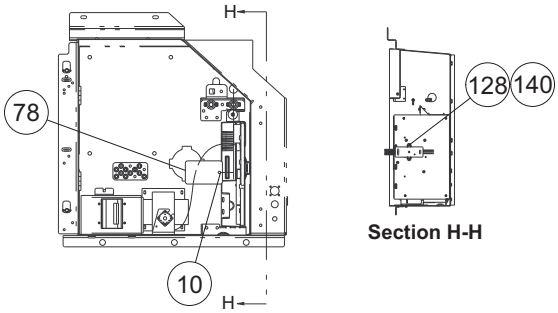

Section H-H

20 Controller Kit (PID NT5103)

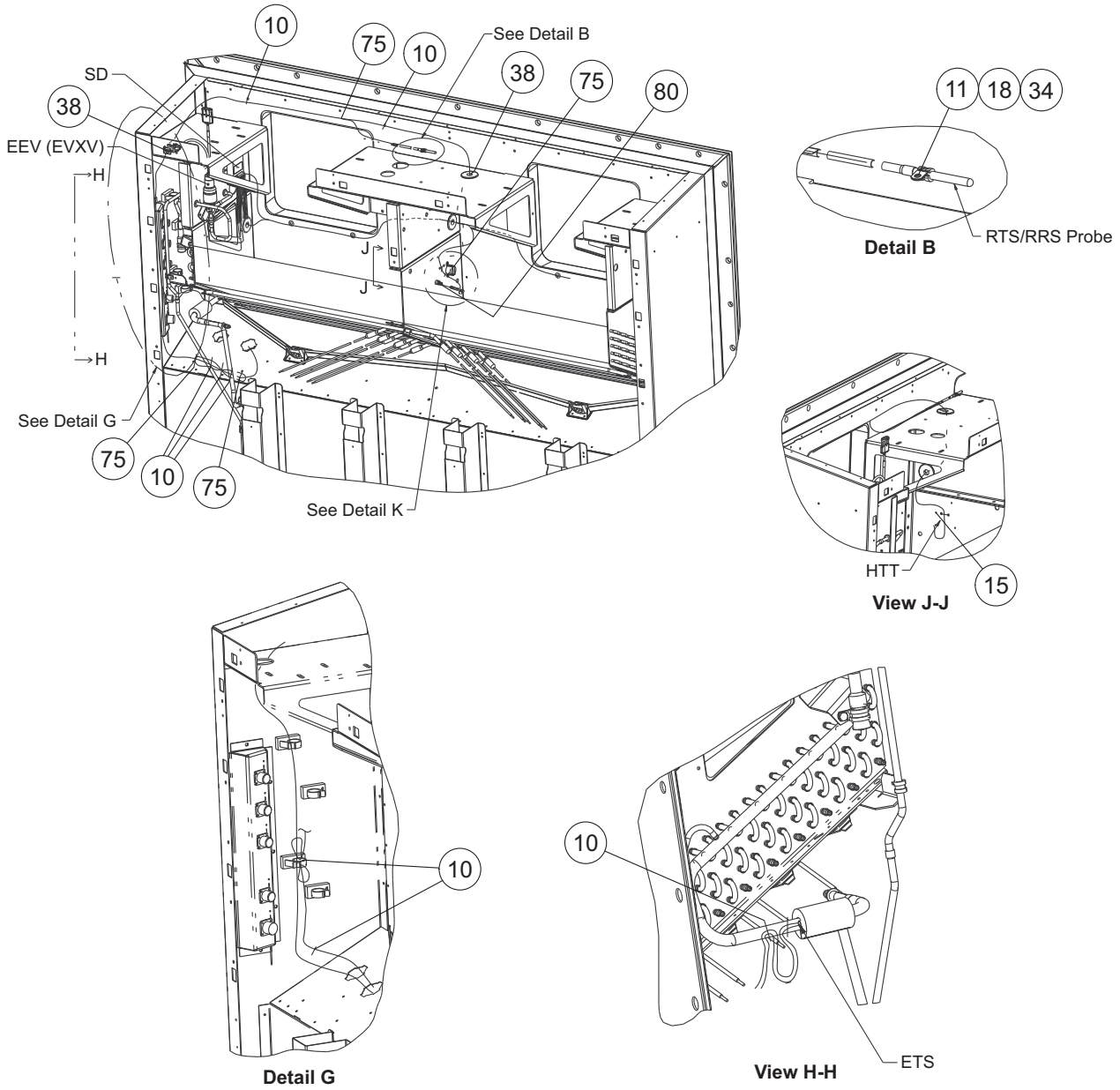

20 Controller Kit (PID NT5103)

Item	Part Number	Description	Qty
1	12-55013	Controller, ML3, Unconfigured	1
2	58-04279-00	Cover	1
8	66-U---1--5371-6	Screw, Mach Hxhd	1
9	34-06053-03	Washer	3
10	66-U---1--3882	Wire Tie	16
11	44-01041-04	Clamp, Cushioned	2
15	34-01178-22	Screw, Tc Hxhd	2
18	66-U---1--5371-7	Screw, Mach Hxhd	6
32	66-U---1--5361-25	Screw, Cap Hxhd	7
33	66-U---1--5321-7	Washer, Plain	4
34	66-U---1--5321-8	Washer, Plain	3
35	--AU--27JR-171	Washer, Lock	3
36	69NT--35--2692-1	Washer, Fender	3
38	58-04273-00	Grommet	2
45	34-06053-00	Washer	2
67	58-00849-03	Tube, Slit	1
68	58-00849-02	Tube, Slit	2
69	66-U---1--3882-8	Wire Tie	1
75	58-00969-00	Wire Tie	4
78	62-11270-29	Label, Warning	1
80	34-01178-23	Screw, TC Hxhd	1
128	22-04214-02	Module	1
129	66-U---1--5371	Screw, Mach Hxhd	1
133	66-U---1--2583-43	Tube	1
134	22-66793-01	Gland	1
135	22-66794-01	Nut	1
138	34-06354-00	Washer, Lock	1
139	66-U---1--5321-2	Washer, Plain	1
140	34-06355-00	Screw	2
150	58-04316-00	Base, Mounting	1

21 Control Box Door Assembly (PIDs NT5000, NT5001, NT5002, NT5003)

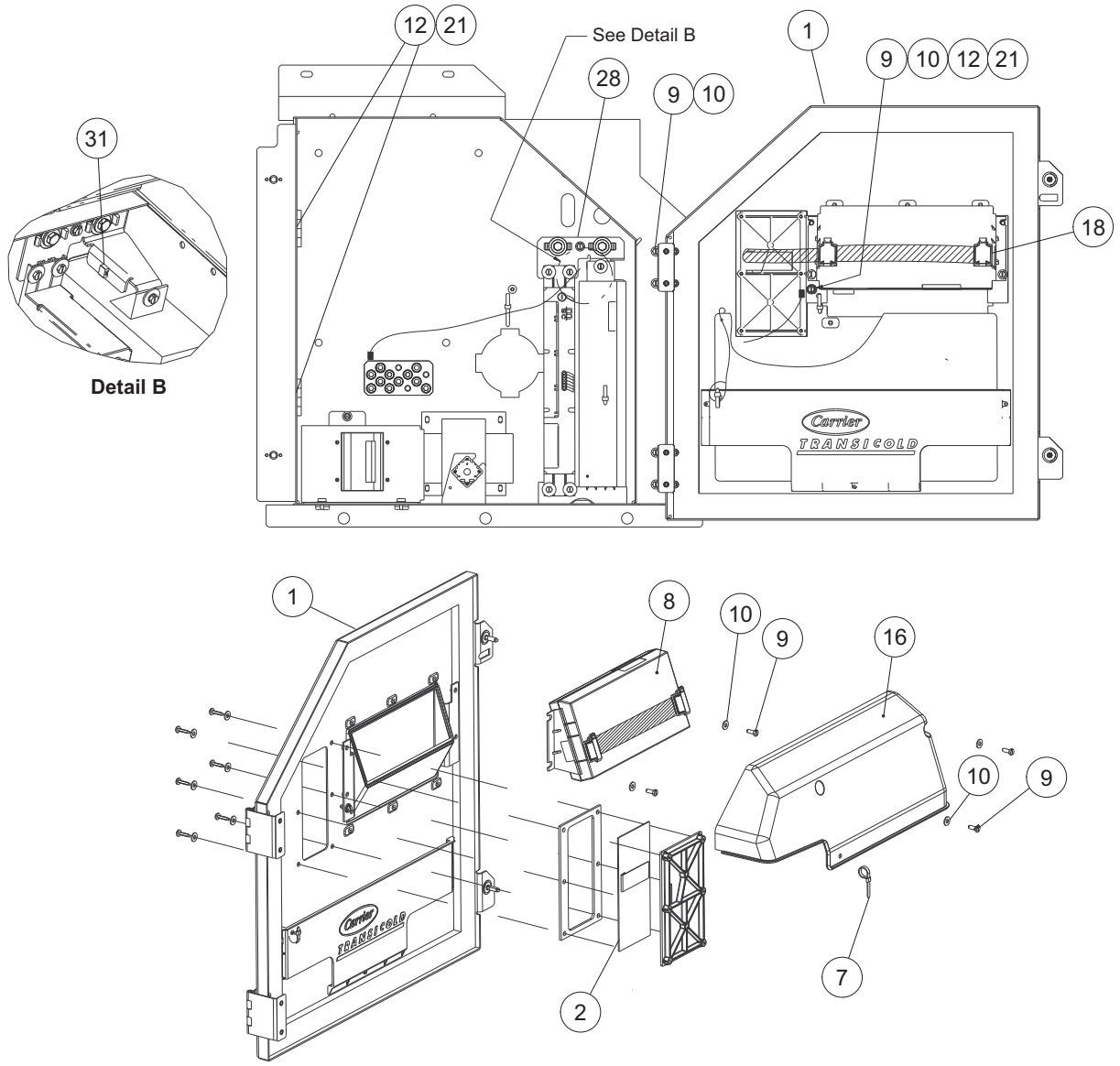

Item	Part Number	Description	Qty
1	79-04018-10	Door Assembly, Removable Pin (see following page for assembly)	1
	79-04018-11	Door Assembly, Fixed Pin (see following page for assembly)	1
2	79-66669-04	Key Pad Assembly (see following page for assembly)	1
8	12-00433-09RP	Display Module	1
9	66-U---1--5371-7	Screw, Mach Hxhd	9
10	66-U---1--5321-8	Washer, Plain	9
12	--AU--27JR-131	Washer, Lock	3
16	58-04960-00	Rain Shield	1
18	44-00391-00	Clamp	2
21	66-U---1--2403	Screw, Mach Trhd	2
28	68-16735-00	Bracket	1
31	58-04316-00	Base, Mounting	1

21 Control Box Door Assembly (PIDs NT5000, NT5001, NT5002, NT5003)

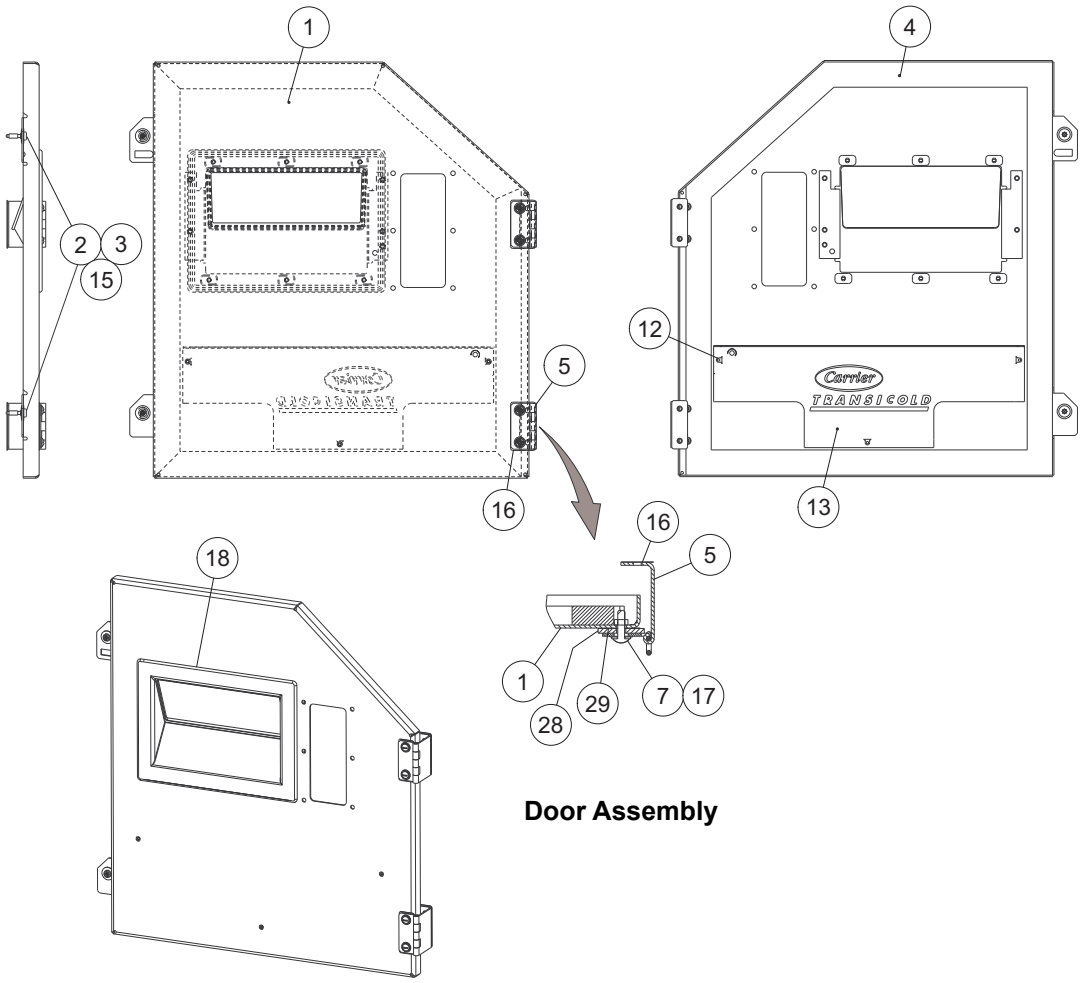

Item	Part Number	Description	Qty
	79-04018-10	Door Assembly, Removable Pin - Includes:	1
	79-04018-11	Door Assembly, Fixed Pin - Includes:	1
1	86-04987-05	Door, Control Box	1
2	34-66687-11	Screw, Retaining	2
3	34-06169-00	Washer, Rtng	2
4	42-00741-00	Gasket	1
5	44-00300-04	Hinge Assembly (for 79-04018-10 only)	2
5	44-00477-00	Hinge Assembly (for 79-04018-11 only)	2
7	66-U---1--2403-1	Screw, Mach Trhd	4
12	34-06107-00	Rivet, Blind	3
13	58-04954-00	Pocket	1
15	34-06053-00	Washer	4
16	58-04101-02	Protector	2
17	34-06053-05	Washer	4
18	58-04366-00	Window	1
28	68-17461-02	Shim (for 79-04018-10 only)	2
29	58-04101-00	Protector	2

21 Control Box Door Assembly (PIDs NT5000, NT5001, NT5002, NT5003)

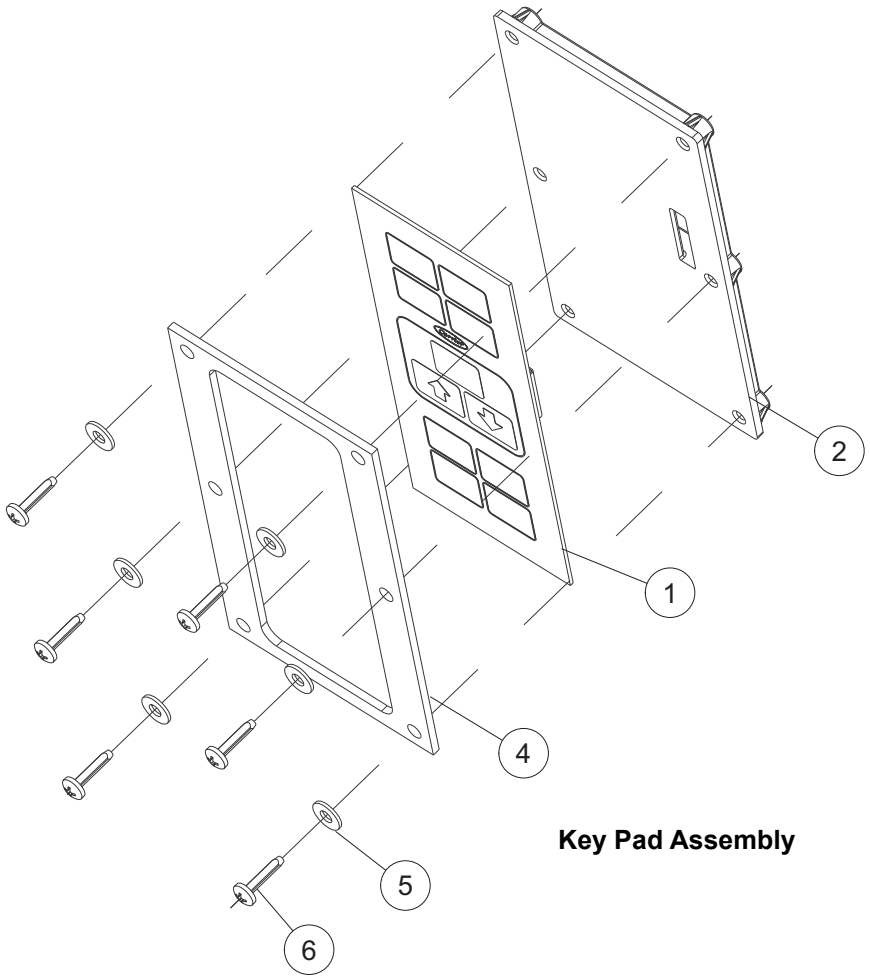

Key Pad Assembly

Item	Part Number	Description	Qty
	79-66669-04	Key Pad Assembly - Includes:	1
1	12-00754-00	Key Pad	1
2	58-04456-00	Plate, Backup	1
4	42-00271-00	Gasket	1
5	34-06212-10	Washer, Plain	6
6	34-66630-00	Screw, Tf Pnhd	6

21 Control Box Door Assembly (PIDs NT5004, NT5010, NT5011, NT5103)

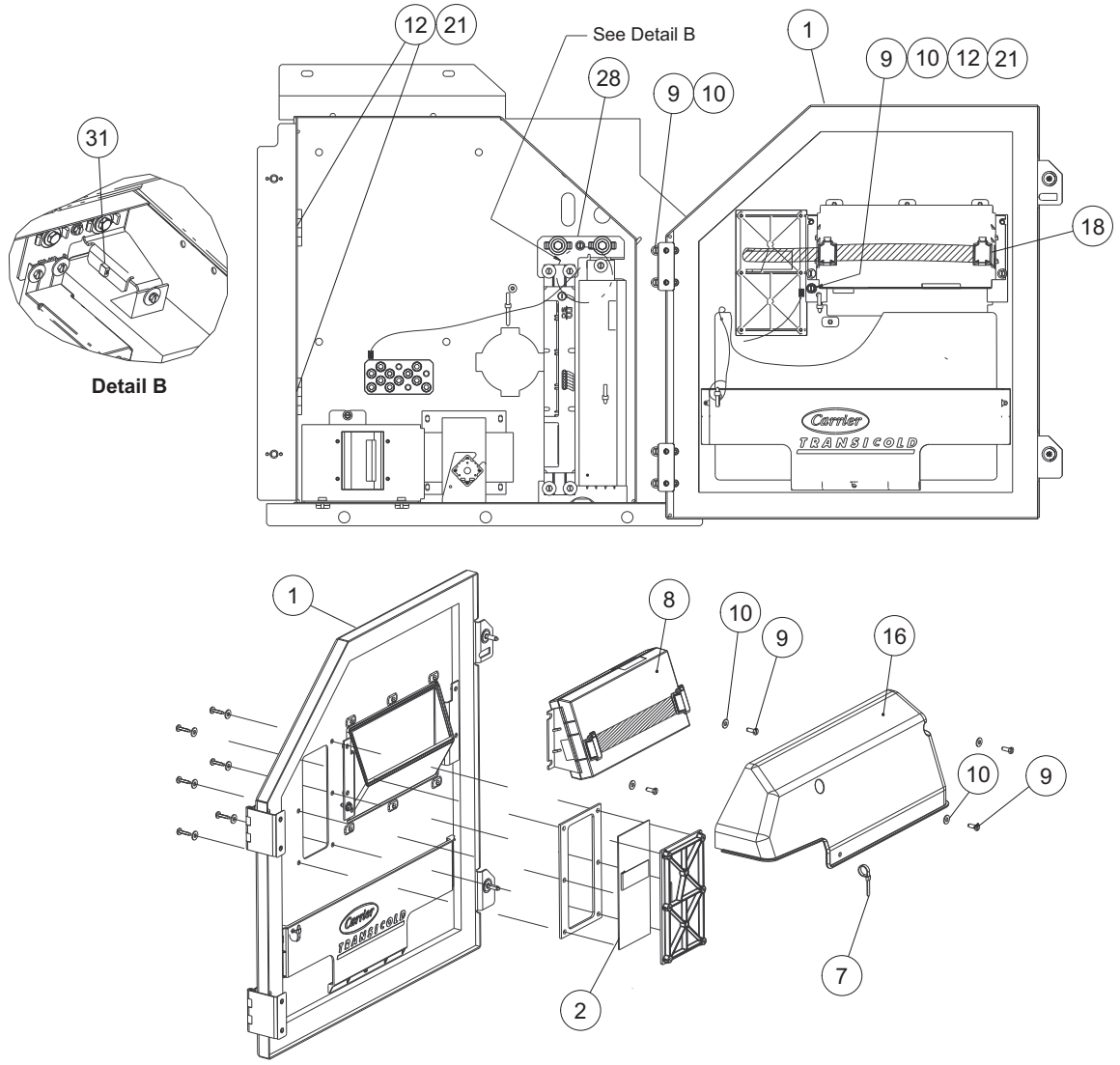

Item	Part Number	Description	Qty
1	79-66017-11	Door Assembly (see following page for assembly)	1
2	79-66669-04	Key Pad Assembly (see following page for assembly)	1
7	66-U---1--3882	Wire Tie	3
8	12-00433-09RP	Display Module	1
9	66-U---1--5371-7	Screw, Mach Hex Head	9
10	66-U---1--5321-8	Washer, Plain	9
12	--AU--27JR-131	Washer, Lock	3
16	58-05145-00	Rain Shield	1
18	44-00391-00	Clamp	2
21	66-U---1--2403	Screw	2
28	68-16735-00	Bracket	1
31	58-04316-00	Base, Mounting	1

21 Control Box Door Assembly (PIDs NT5004, NT5010, NT5011, NT5103)

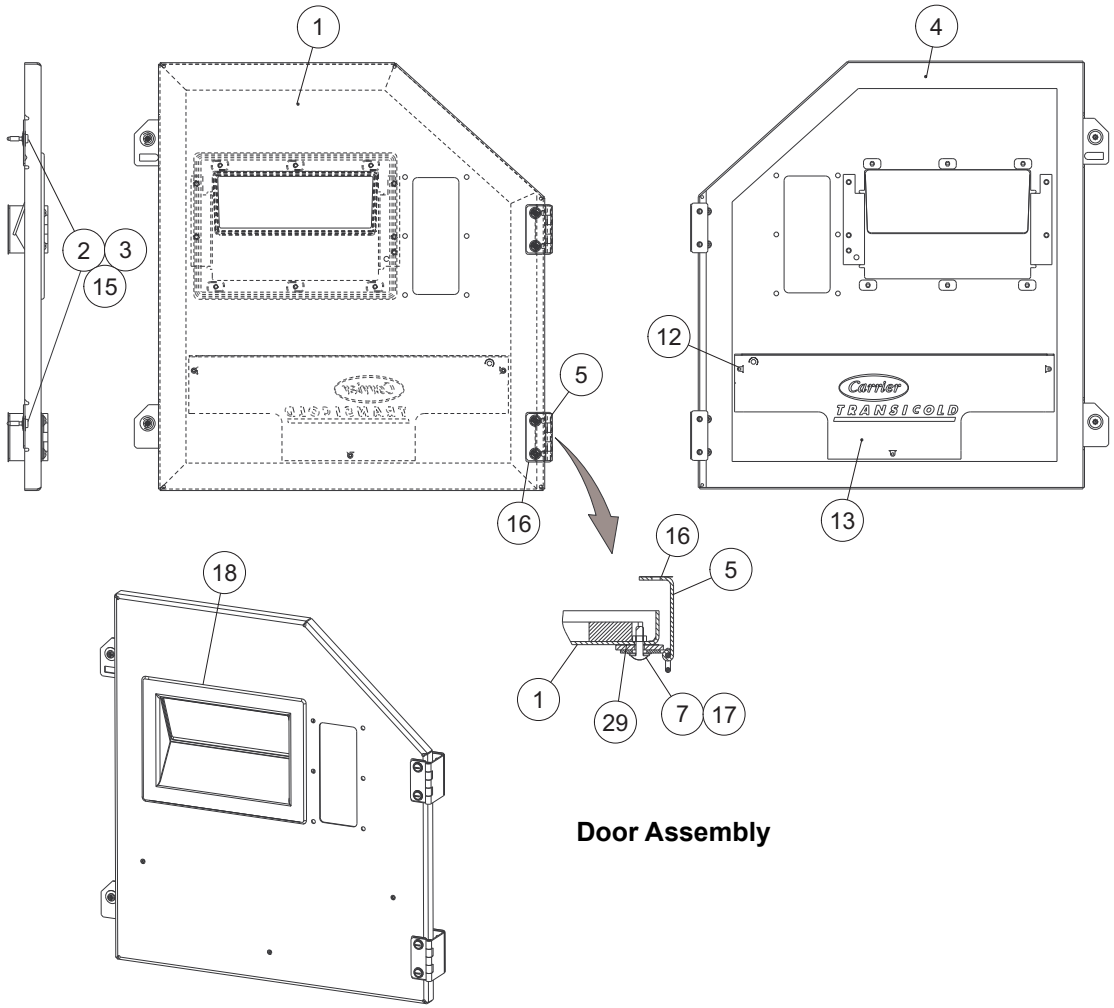

Door Assembly

	79-66017-11	Door Assembly - Includes:	1
1	86-66756-05	Door, Control Box	1
2	34-66687-11	Screw, Retaining	2
3	34-06169-00	Washer, Retaining	2
4	42-00741-00	Gasket	1
5	44-00477-00	Hinge Assembly	2
7	66-U---1--2403-1	Screw, Mach Trhd	4
12	34-06107-00	Rivet, Blind	3
13	58-04954-00	Pocket	1
15	34-06053-00	Washer	4
16	58-04101-02	Protector	2
17	34-06053-05	Washer	4
18	58-04366-00	Window	1
29	58-04101-00	Protector	2

21 Control Box Door Assembly (PIDs NT5004, NT5010, NT5011, NT5103)

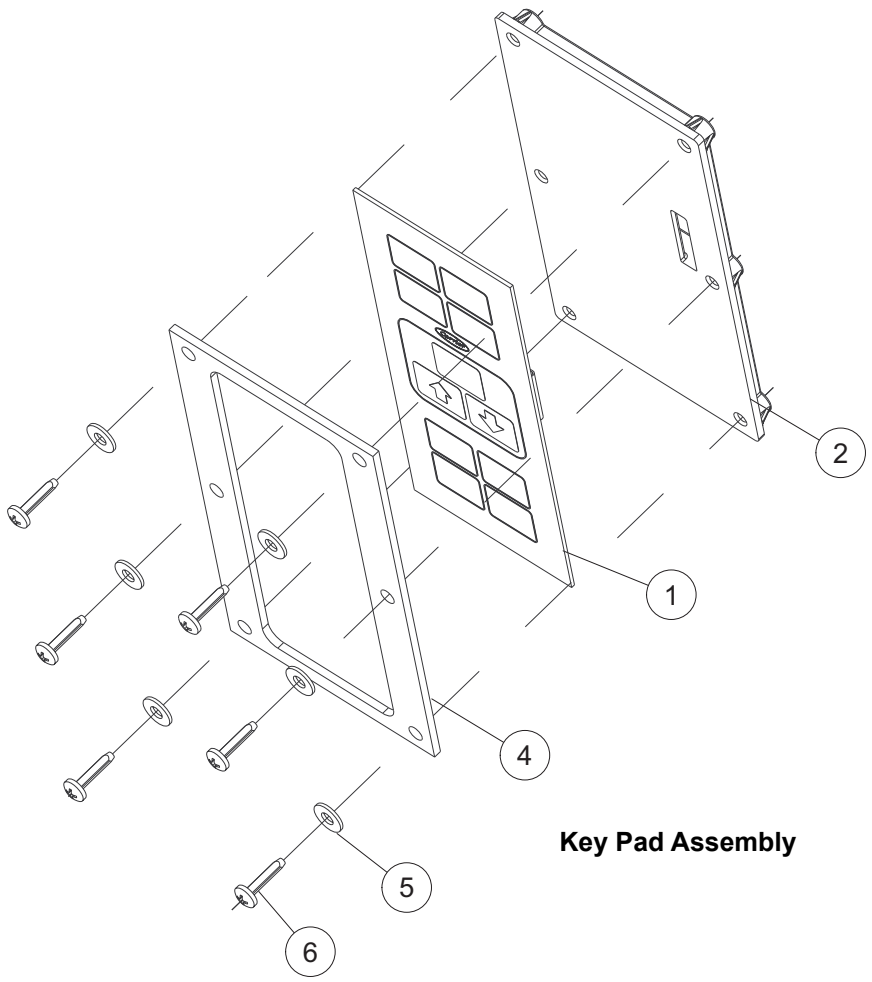

Key Pad Assembly

	79-66669-04	Key Pad Assembly - Includes:	1
1	12-00754-00	Key Pad	1
2	58-04456-00	Plate, Backup	1
4	42-00271-00	Gasket	1
5	34-06212-10	Washer, Plain	6
6	34-66630-00	Screw, Tf Pnhd	6

22 RMU Kit (NT5000, NT5003, NT5004, NT5010, NT5011, NT5103)

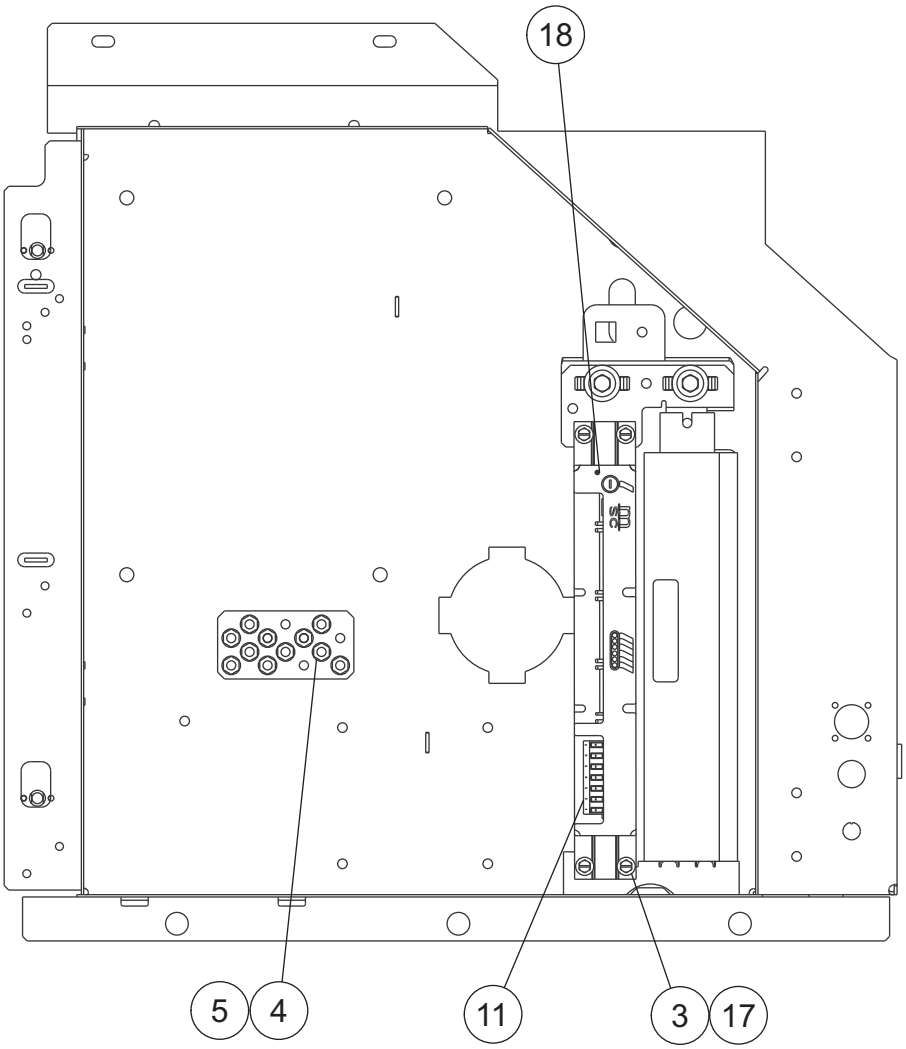

Provision / Installed

Item	Part Number	Description	Qty
3	66-U---1--5371-7	Screw, Mach Hxhd	4
4	--AT--39JA-171	Nut, Hex	2
5	--AU--27JR-171	Washer, Lock	2
11	22-66697-23	Wire Assembly	1
17	66-U---1--5321-8	Washer, Plain	4
18	12-00573-00SV	RMU Communication Module	1

22 RMU Kit (PIDs NT5001, NT5002)

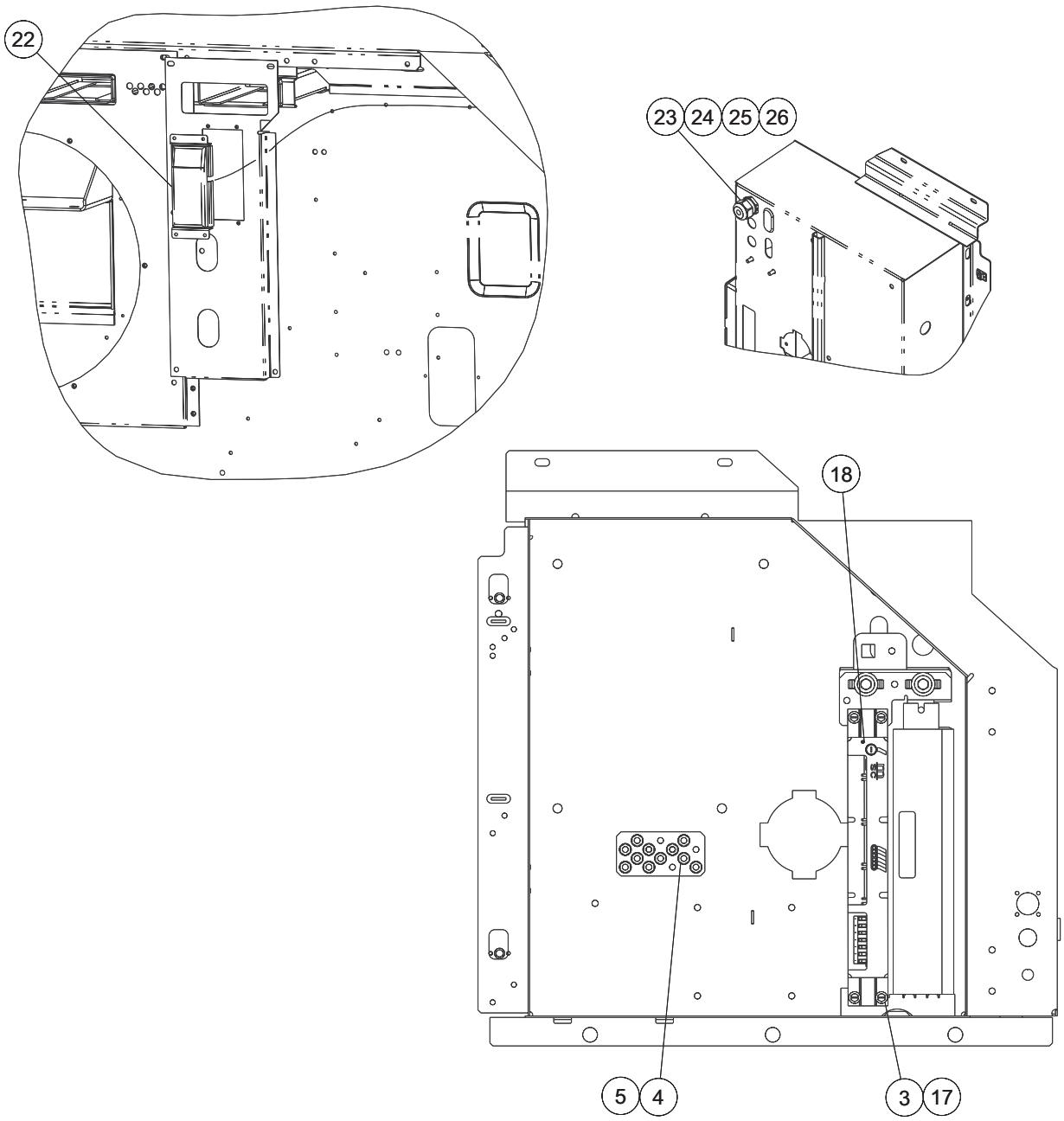

Item	Part Number	Description	Qty
3	66-U---1--5371-7	Screw, Mach Hex Head	4
4	--AT--39JA-171	Nut, Hex	2
5	--AU--27JR-171	Washer, Lock	2
17	66-U---1--5321-8	Washer, Plain	4
18	12-00573-00SV	RMU Communication Module	1
19	58-66679-00	Bracket for Module (not shown)	1
22	22-66701-00	Antenna	1
23	58-66677-00	Connector, Cable	1
24	58-66678-00	Connector, Cable	1
25	42-66645-00	Grommet	1
26	42-66646-00	O-Ring	1

23 Panel Kit

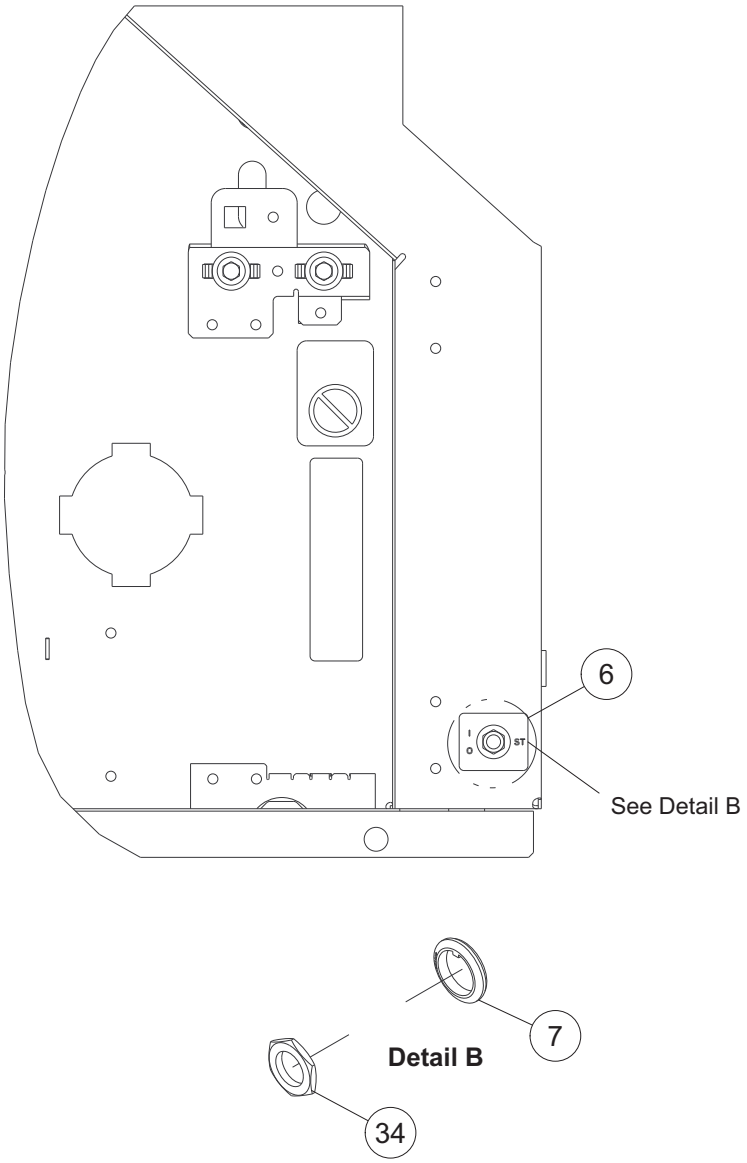

Item	Part Number	Description	Qty
6	62-11731-00	Label	1
7	66-U---1--9752	Seal	1
34	10-01129-20	Nut, Hex	1

24 Interrogator Kit

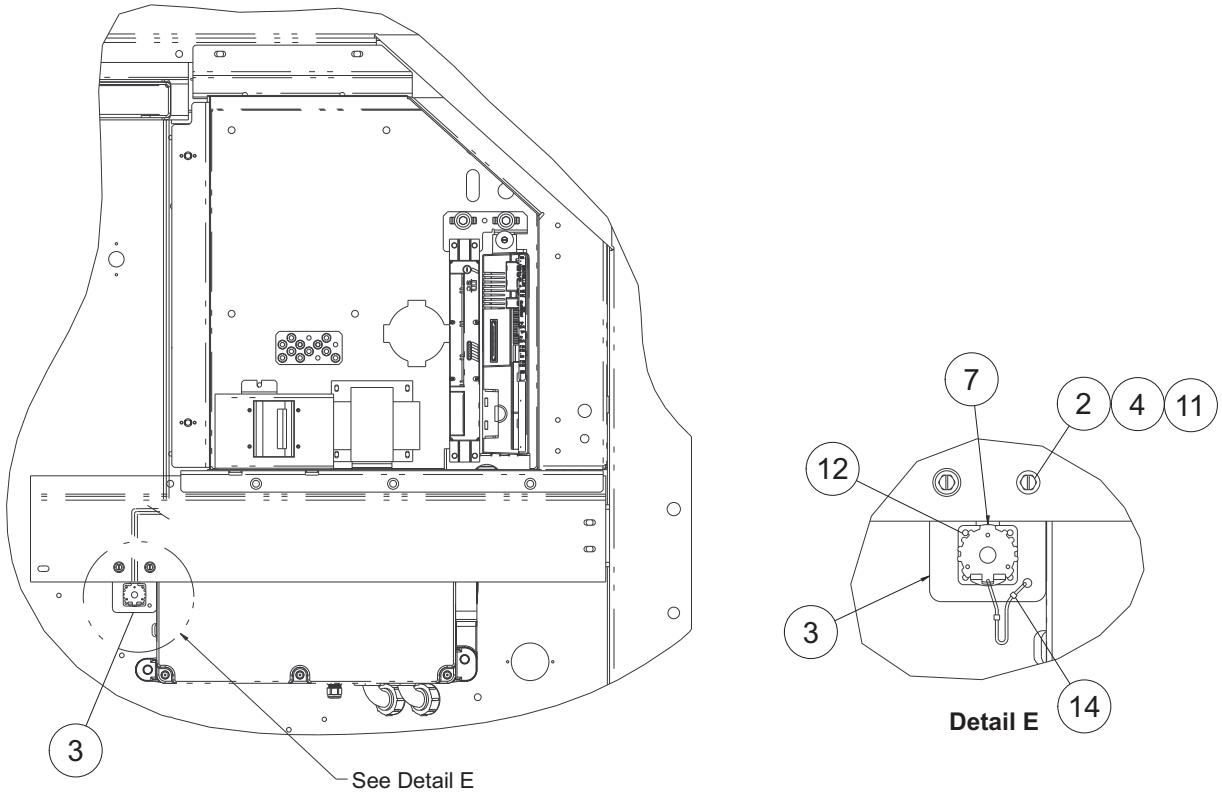

Item	Part Number	Description	Qty
1	66-U---1--3882	Wire Tie (not shown)	4
2	66-U---1--5321-8	Washer, Plain	2
3	68-18365-00	Bracket	1
	68-18365-01	Bracket (PID NT5103 only)	1
4	66-U---1--5371-7	Screw, Mach Hxhd	2
7	79-66743-02	Cord Assembly	1
11	34-06053-05	Washer	2
12	34-06142-00	Rivet	4
14	22-02205-00	Connector	1

25 Plate Assembly

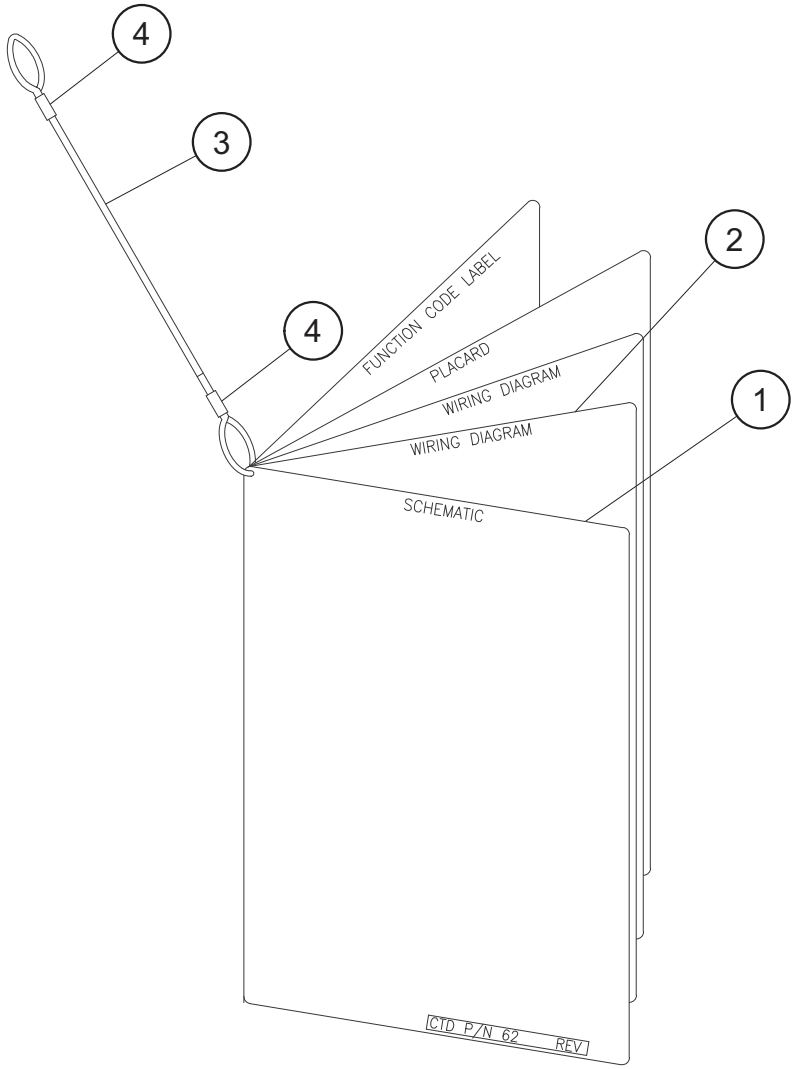

Item	Part Number	Description	Qty
	79-04175-00	Plate Assembly (PIDs NT5001 & 5002) Includes:	1
1	62-11916-00	Plate	1
2	62-11916-01	Plate	1
3	58-01097-00	Cord, Nylon	1
4	22-02205-00	Connector	2
	79-04175-01	Plate Assembly (PID NT5103) Includes:	1
1	62-12284-00	Plate	1
2	62-12284-01	Plate	1
3	58-01097-00	Cord, Nylon	1
4	22-66798-00	Connector	2
	79-04227-00	Plate Assembly (PIDs NT5000, 5003, 5004, 5010, 5011) Includes:	1
1	62-11969-00	Plate	1
2	62-11969-01	Plate	1
3	58-01097-00	Cord, Nylon	1
4	22-66798-00	Connector	2

26 Wiring Kit

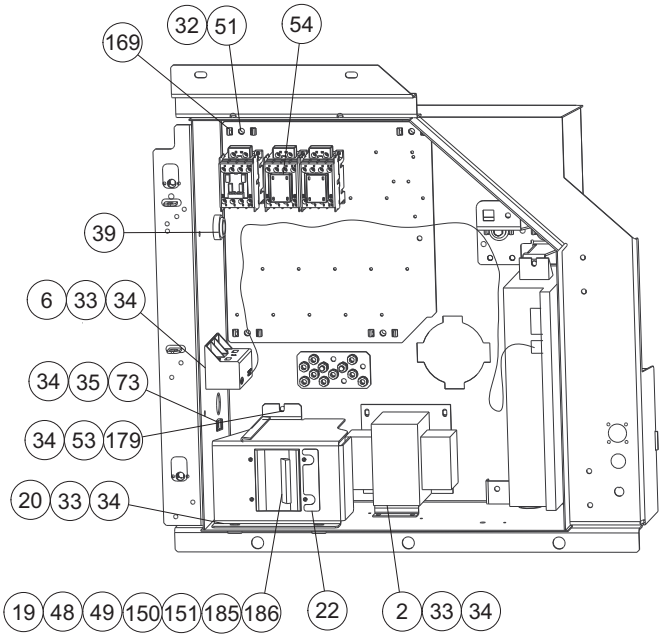

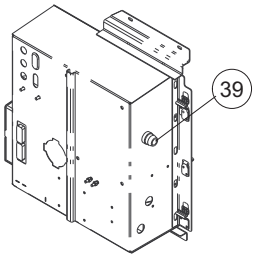

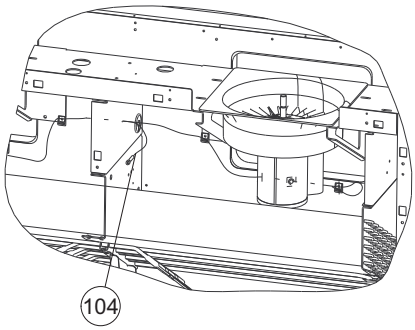

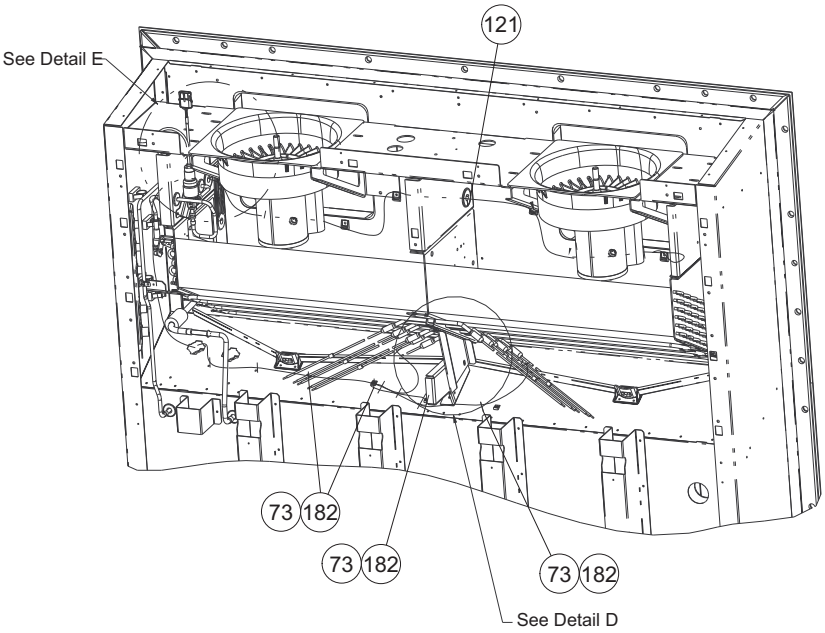

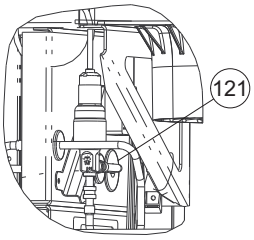

Detail E

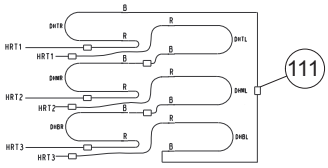

Detail D
Heater Wiring

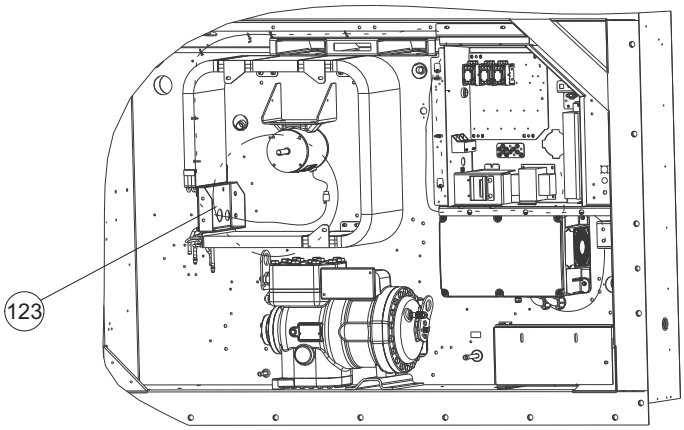

26 Wiring Kit

Item	Part Number	Description	Qty
2	10-00332-08	Transformer, Base Unit	1
6	10-00439-01	Transformer, Control	1
19	66-U---1--7842-12	Circuit Breaker (CB1)	1
20	68-17405-00	Bracket	1
22	69NT--35--9073-1	Label, CB1	1
32	34-00655-08	Screw, Cap Hxhd	4
33	66-U---1--5321-8	Washer, Plain	10
34	66-U---1--5371-7	Screw, Mach Hxhd	12
35	34-00663-09	Washer, Lock	1
39	22-02302-03	Connector	1
	22-66013-03	Connector (PID NT5103)	1
48	66-U---1--6651-19	Screw, Mach Pnhd	4
49	34-00663-07	Washer, Lock	4
51	66-U---1--5321-7	Washer, Plain	4
53	34-06053-13	Washer, Rtng	1
54	10-00431-11	Cover	2
73	58-04246-00	Ty-Rap Base	7
104	34-01178-22	Screw, Tc Hxhd	1
111	22-01292-02	Butt Splice	9
121	58-04273-00	Grommet	2
123	58-00065-93	Grommet	1
150	66-U---1--7842-6	Nut, Hex	6
151	66-U---1--7842-7	Washer, Flat	12
169	58-66689-00	Spacer	4
179	69NT--35--2692-4	Washer, Fender	1
182	34-00928-13	Rivet, Blind	6
185	22-66697-82	Wire Assembly	1
186	22-66697-83	Wire Assembly	1

27 Wire Harness, Low Voltage

Item	Part Number	Description	Qty
	22-04413-01	Wire Harness, Low Voltage (PID NT5001)	1
	22-04413-05	Wire Harness, Low Voltage (PID NT5002)	1
	22-04413-07	Wire Harness, Low Voltage (PID NT5000)	1
	22-04413-09	Wire Harness, Low Voltage (PIDs NT5003 and NT5004)	1
	22-66789-09	Wire Harness, Low Voltage (PIDs NT5010 and NT5011)	1
	22-04527-06	Wire Harness, Low Voltage (PID NT5103)	1

Scroll down to see details of harnesses below

22-04413-01

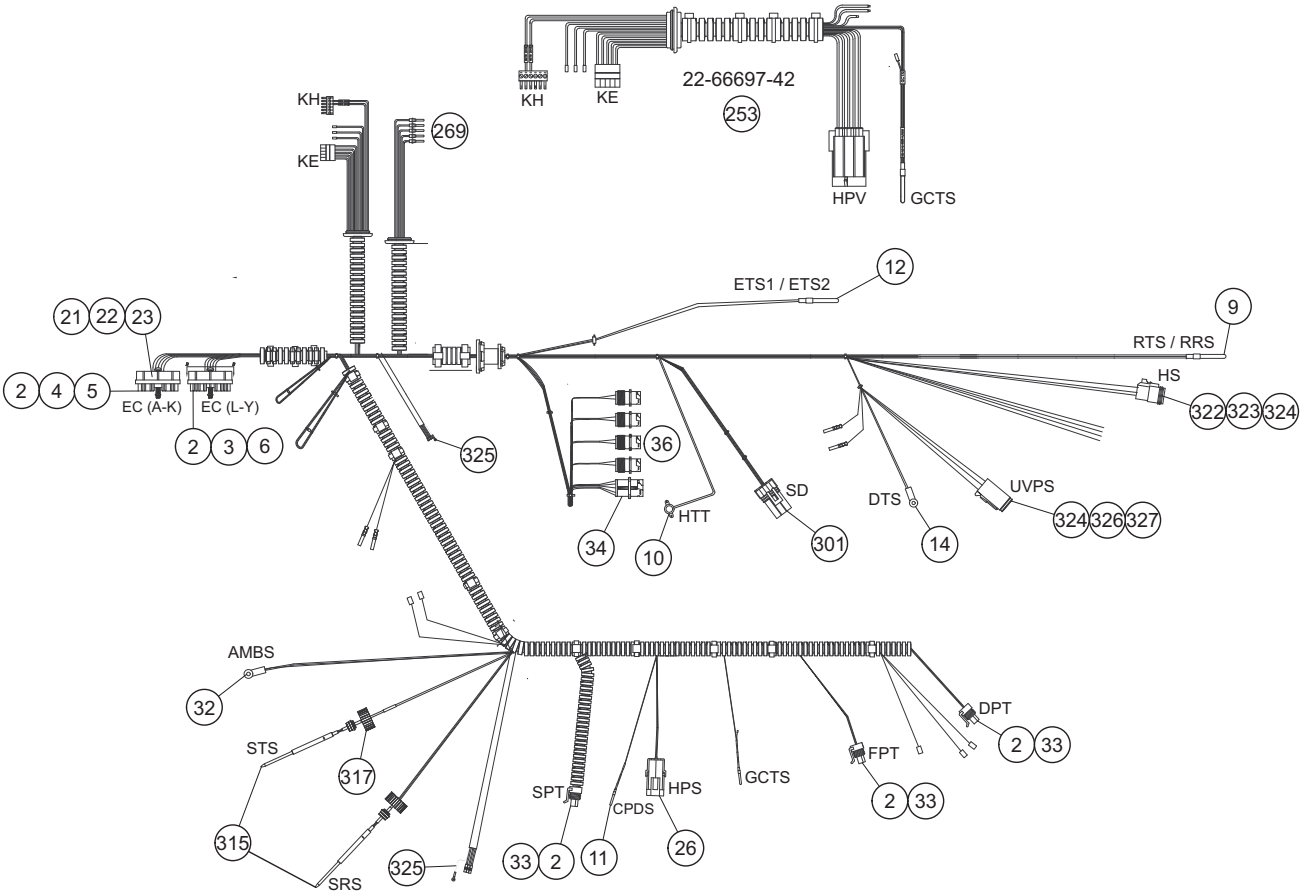

Item	Part Number	Description	Qty
	22-04413-01	Wire Harness, Low Voltage (PID NT5001):	1
2	22-01777-03	Contact	15
3	22-01777-01	Connector (EC L-Y)	1
4	22-01777-00	Connector (EC A-K)	1
5	22-01777-02	Contact	2
6	22-01777-04	Plug	8
9	12-00500-13	Thermistor (RTS / RRS)	1
10	12-00170-08	Thermostat (HTT)	1

27 Wire Harness, Low Voltage			
11	12-00726-01	Thermistor (CPDS)	1
12	12-00500-03	Thermistor (ETS1 / ETS2)	1
14	12-00495-01	Thermistor (DTS)	1
21	22-01777-06	Seal	4
22	22-01777-07	O-Ring	2
23	66-U---1--6651-24	Screw, Mach Pnhd	2
26	22-02392-00	Connector, Male	1
32	12-00495-00	Thermistor (AMBS)	1
33	22-02448-00	Connector, Fem (DPT, FPT, SPT)	3
34	22-01660-14	Receptacle (ICR)	1
36	22-01660-12	Receptacle (USDA, Cargo Probes)	4
253	22-66697-42	Wire Harness (KE, KH, HPXV, GCTS)	1
269	22-66697-02	Wire Harness	1
301	22-01835-00	Connector	1
315	12-00395-01SV	Sensor (STS / SRS)	2
317	58-04277-00	Cap	2
322	22-01613-06	Plug	1
323	22-01613-07	Lock, Secondary	1
324	22-01613-13	Contact	3
325	22-04281-00	Cable Assembly	1
326	22-01613-10	Plug	1
327	22-01613-11	Lock	1

27 Wire Harness, Low Voltage

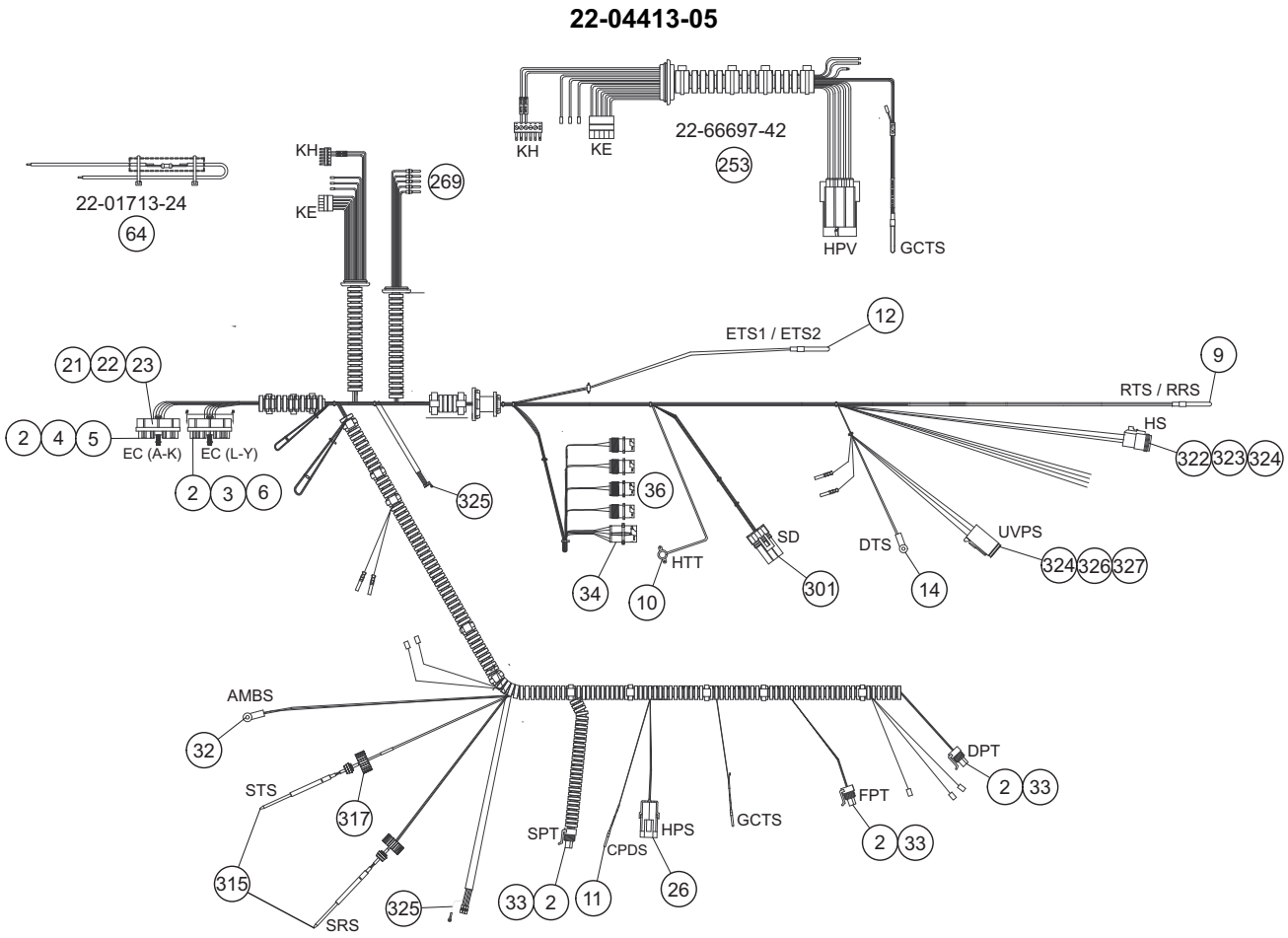

Item	Part Number	Description	Qty
	22-04413-05	Wire Harness, Low Voltage (PID NT5002):	1
2	22-01777-03	Contact	15
3	22-01777-01	Connector (EC L-Y)	1
4	22-01777-00	Connector (EC A-K)	1
5	22-01777-02	Contact	2
6	22-01777-04	Plug	8
9	12-00500-13	Thermistor (RTS / RRS)	1
10	12-00170-08	Thermostat (HTT)	1
11	12-00726-01	Thermistor (CPDS)	1
12	12-00500-03	Thermistor (ETS1 / ETS2)	1
14	12-00495-01	Thermistor (DTS)	1
21	22-01777-06	Seal	4
22	22-01777-07	O-Ring	2
23	66-U---1--6651-24	Screw, Mach Pnhd	2
26	22-02392-00	Connector, Male	1
32	12-00495-00	Thermistor (AMBS)	1
33	22-02448-00	Connector, Fem (DPT, FPT, SPT	3

27 Wire Harness, Low Voltage			
34	22-01660-14	Receptacle (ICR)	1
36	22-01660-12	Receptacle (USDA, Cargo Probes)	4
64	22-01713-24	Harness	1
253	22-66697-42	Wire Harness (KE, KH, HPXV, GCTS)	1
269	22-66697-02	Wire Harness	1
301	22-01835-00	Connector	1
315	12-00395-01SV	Sensor (STS / SRS)	2
317	58-04277-00	Cap	2
322	22-01613-06	Plug	1
323	22-01613-07	Lock, Secondary	1
324	22-01613-13	Contact	3
325	22-04281-00	Cable Assembly, VFD Communication	1
326	22-01613-10	Plug	1
327	22-01613-11	Lock	1

27 Wire Harness, Low Voltage

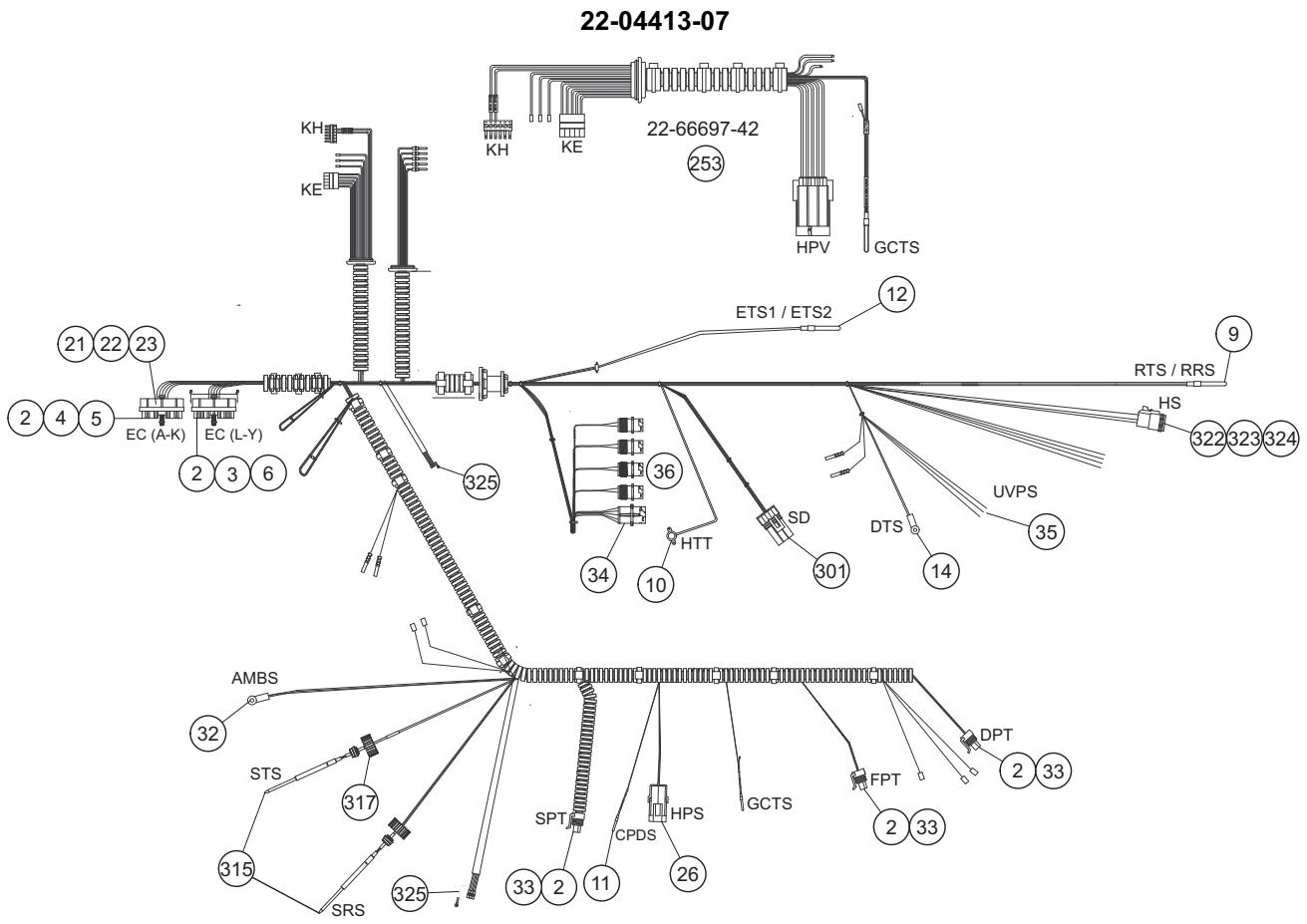

Item	Part Number	Description	Qty
	22-04413-07	Wire Harness, Low Voltage (PID NT5000):	1
2	22-01777-03	Contact	15
3	22-01777-01	Connector (EC L-Y)	1
4	22-01777-00	Connector (EC A-K)	1
5	22-01777-02	Contact	2
6	22-01777-04	Plug	8
9	12-00500-13	Thermistor, Return Recorder Sensor (RRS) and Return Temperature Sensor (RTS)	1
10	12-00170-08	Thermostat, Heat Termination Thermostat (HTT)	1
11	12-00726-01	Thermistor, Compressor Discharge Temperature Sensor (CPDS)	1
12	12-00500-03	Thermistor, Evaporator Temperature Sensor (ETS1 / ETS2)	1
14	12-00495-01	Thermistor, Defrost Temperature Sensor (DTS)	1
21	22-01777-06	Seal	4
22	22-01777-07	O-Ring	2
23	66-U---1--6651-24	Screw, Mach Pnhd	2
26	22-02392-00	Connector, Male	1
32	12-00495-00	Thermistor, Ambient Temperature Sensor (AMBS)	1
33	22-02448-00	Connector, Fem (DPT, FPT, SPT)	3

27 Wire Harness, Low Voltage			
34	22-01660-14	Receptacle (ICR)	1
35	66-U---1--8292-1	Cap, Insulating	4
36	22-01660-12	Receptacle (USDA, Cargo Probes)	4
253	22-66697-42	Wire Harness (KE, KH, HPXV, GCTS)	1
301	22-01835-00	Connector	1
315	12-00395-01SV	Sensor, Supply Recorder Sensor (SRS) and Supply Temperature Sensor (STS)	2
317	58-04277-00	Cap	2
322	22-01613-06	Plug	1
323	22-01613-07	Lock, Secondary	1
324	22-01613-13	Contact	3
325	22-04281-00	Cable Assembly, VFD Communication	1

27 Wire Harness, Low Voltage

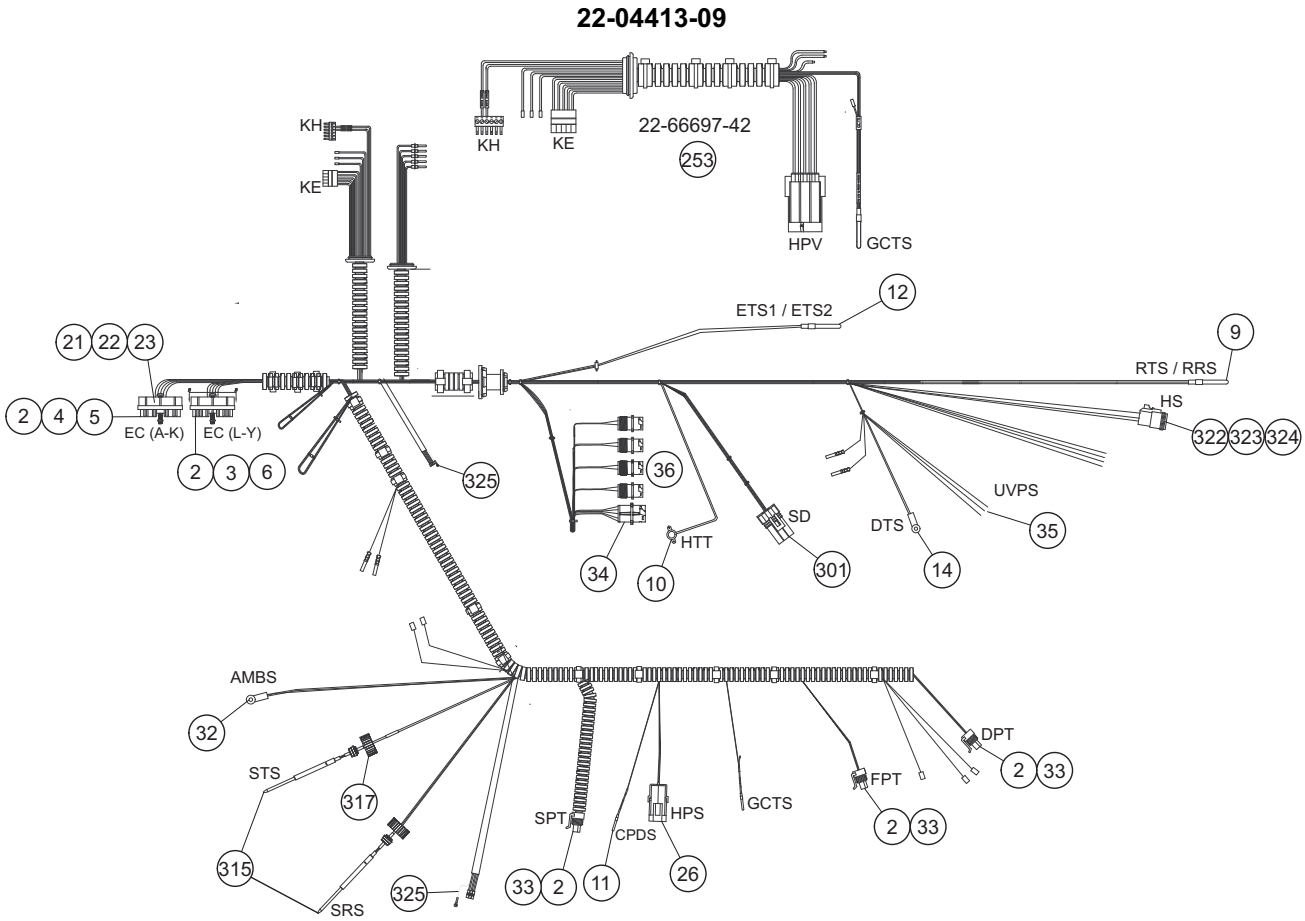

Item	Part Number	Description	Qty
	22-04413-09	Wire Harness, Low Voltage (PIDs NT5003 and NT5004):	1
2	22-01777-03	Contact	15
3	22-01777-01	Connector (EC L-Y)	1
4	22-01777-00	Connector (EC A-K)	1
5	22-01777-02	Contact	2
6	22-01777-04	Plug	8
9	12-00500-21	Thermistor (RTS / RRS)	1
10	12-00170-08	Thermostat (HTT)	1
11	12-00726-01	Thermistor (CPDS)	1
12	12-00500-03	Thermistor (ETS1 / ETS2)	1
14	12-00495-01	Thermistor (DTS)	1
21	22-01777-06	Seal	4
22	22-01777-07	O-Ring	2
23	66-U---1--6651-24	Screw, Mach Pnhd	2
26	22-02392-00	Connector, Male	1
32	12-00495-00	Thermistor (AMBS)	1
33	22-02448-00	Connector, Fem (DPT, FPT, SPT)	3

27 Wire Harness, Low Voltage			
34	22-01660-14	Receptacle (ICR)	1
35	66-U---1--8292-1	Cap, Insulating	4
36	22-01660-12	Receptacle (USDA, Cargo Probes)	4
253	22-66697-42	Wire Harness (KE, KH, HPXV, GCTS)	1
301	22-01835-00	Connector	1
315	12-00395-01SV	Sensor (STS / SRS)	2
317	58-04277-00	Cap	2
322	22-01613-06	Plug	1
323	22-01613-07	Lock, Secondary	1
324	22-01613-13	Contact	3
325	22-04281-00	Cable Assembly, VFD Communication	1

27 Wire Harness, Low Voltage

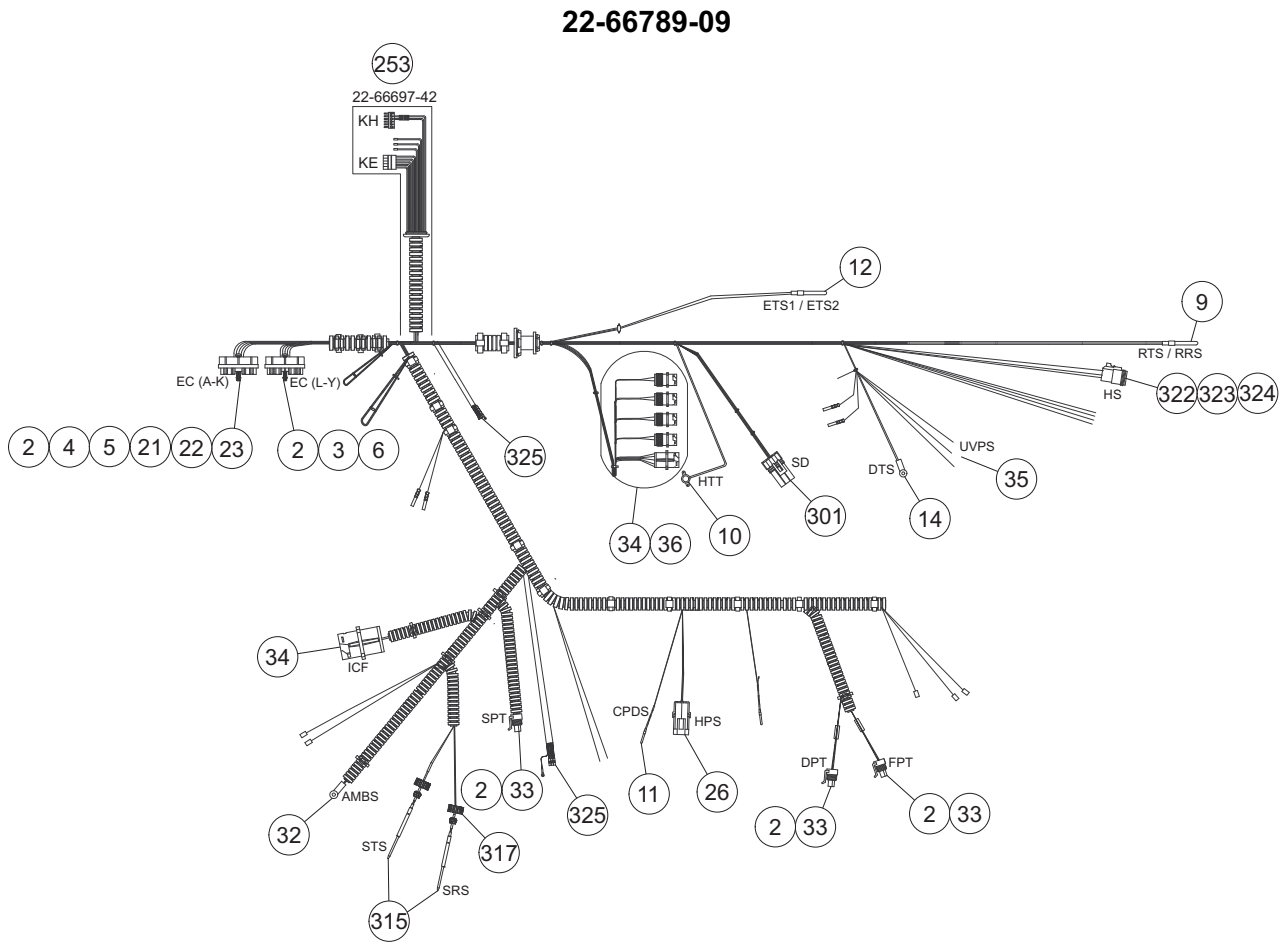

Item	Part Number	Description	Qty
	22-66789-09	Wire Harness, Low Voltage (PIDs NT5010 and NT5011):	1
2	22-01777-03	Contact	15
3	22-01777-01	Connector (EC L-Y)	1
4	22-01777-00	Connector (EC A-K)	1
5	22-01777-02	Contact	2
6	22-01777-04	Plug	8
9	12-00500-21	Thermistor (RTS / RRS)	1
10	12-00170-08	Thermostat (HTT)	1
11	12-00726-01	Thermistor (CPDS)	1
12	12-00500-03	Thermistor (ETS1 / ETS2)	1
14	12-00495-01	Thermistor (DTS)	1
21	22-01777-06	Seal	4
22	22-01777-07	O-Ring	2
23	66-U---1--6651-24	Screw, Mach Pnhd	2
26	22-02392-00	Connector, Male	1
32	12-00495-00	Thermistor (AMBS)	1

27 Wire Harness, Low Voltage			
33	22-02448-00	Connector, Fem (DPT, FPT, SPT)	3
34	22-01660-14	Receptacle (ICR)	2
35	66-U---1--8292-1	Cap, Insulating	4
36	22-01660-12	Receptacle (USDA, Cargo Probes)	4
253	22-66697-42	Wire Harness (KE, KH, HPXV, GCTS)	1
301	22-01835-00	Connector	1
315	12-00395-01SV	Sensor (STS / SRS)	2
317	58-04277-00	Cap	2
322	22-01613-06	Plug	1
323	22-01613-07	Lock, Secondary	1
324	22-01613-13	Contact	3
325	22-04281-00	Cable Assembly, VFD Communication	1

27 Wire Harness, Low Voltage

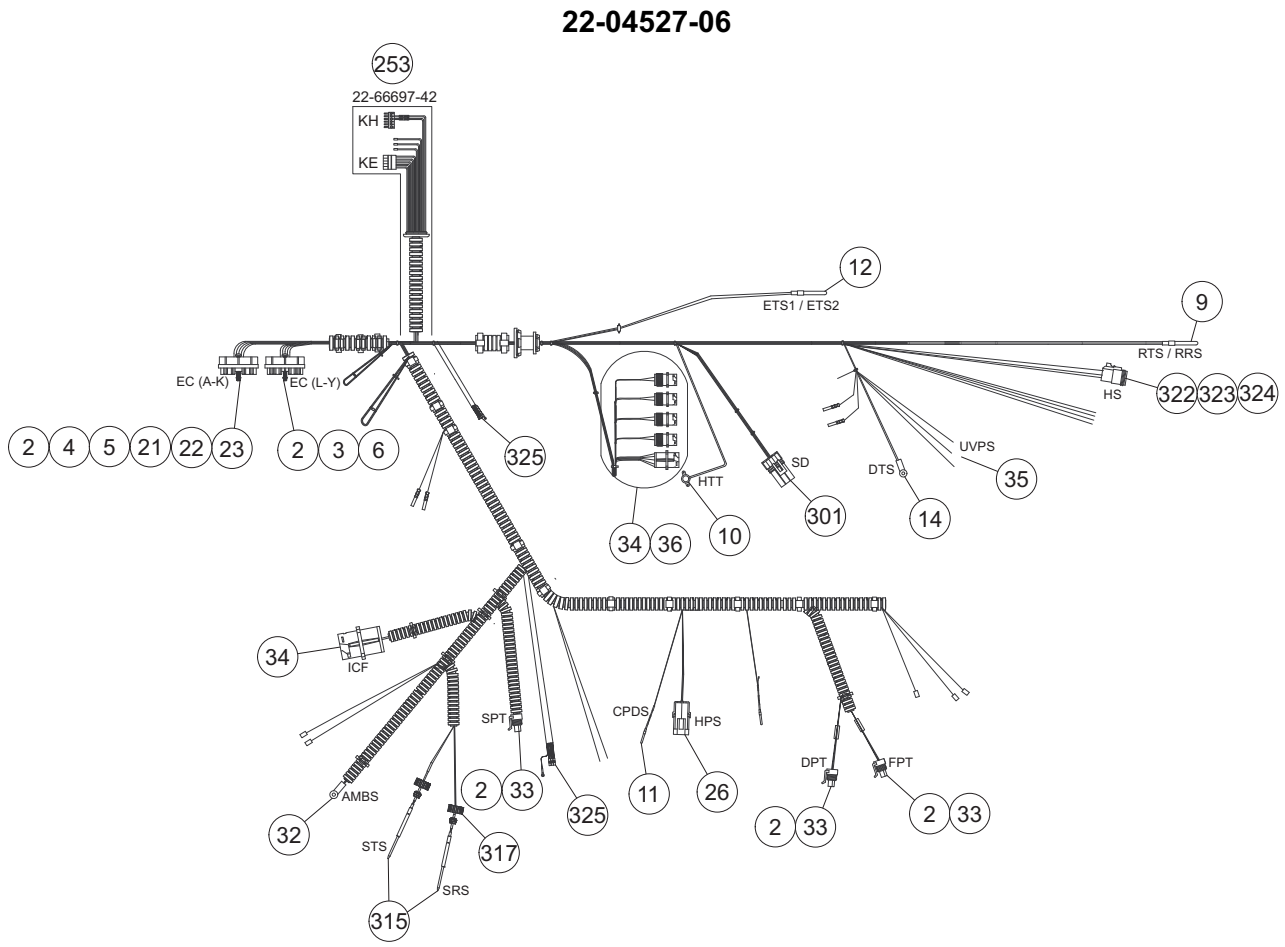

Item	Part Number	Description	Qty
	22-04527-06	Wire Harness, Low Voltage (PIDs NT5010 and NT5011):	1
2	22-01777-03	Contact	15
3	22-01777-01	Connector (EC L-Y)	1
4	22-01777-00	Connector (EC A-K)	1
5	22-01777-02	Contact	2
6	22-01777-04	Plug	8
9	12-00500-21	Thermistor (RTS / RRS)	1
10	12-00170-08	Thermostat (HTT)	1
11	12-00726-01	Thermistor (CPDS)	1
12	12-00500-03	Thermistor (ETS1 / ETS2)	1
14	12-00495-01	Thermistor (DTS)	1
21	22-01777-06	Seal	4
22	22-01777-07	O-Ring	2
23	66-U---1--6651-24	Screw, Mach Pnhd	2
26	22-02392-00	Connector, Male	1
32	12-00495-00	Thermistor (AMBS)	1

27 Wire Harness, Low Voltage			
33	22-02448-00	Connector, Fem (DPT, FPT, SPT)	3
34	22-01660-14	Receptacle (ICR)	2
35	66-U---1--8292-1	Cap, Insulating	4
36	22-01660-12	Receptacle (USDA, Cargo Probes)	4
253	22-66697-42	Wire Harness (KE, KH, HPXV, GCTS)	1
301	22-01835-00	Connector	1
315	12-00395-01SV	Sensor (STS / SRS)	2
317	58-04277-00	Cap	2
322	22-01613-06	Plug	1
323	22-01613-07	Lock, Secondary	1
324	22-01613-13	Contact	3
325	22-04281-00	Cable Assembly, VFD Communication	1

28 Wire Harness, High Voltage

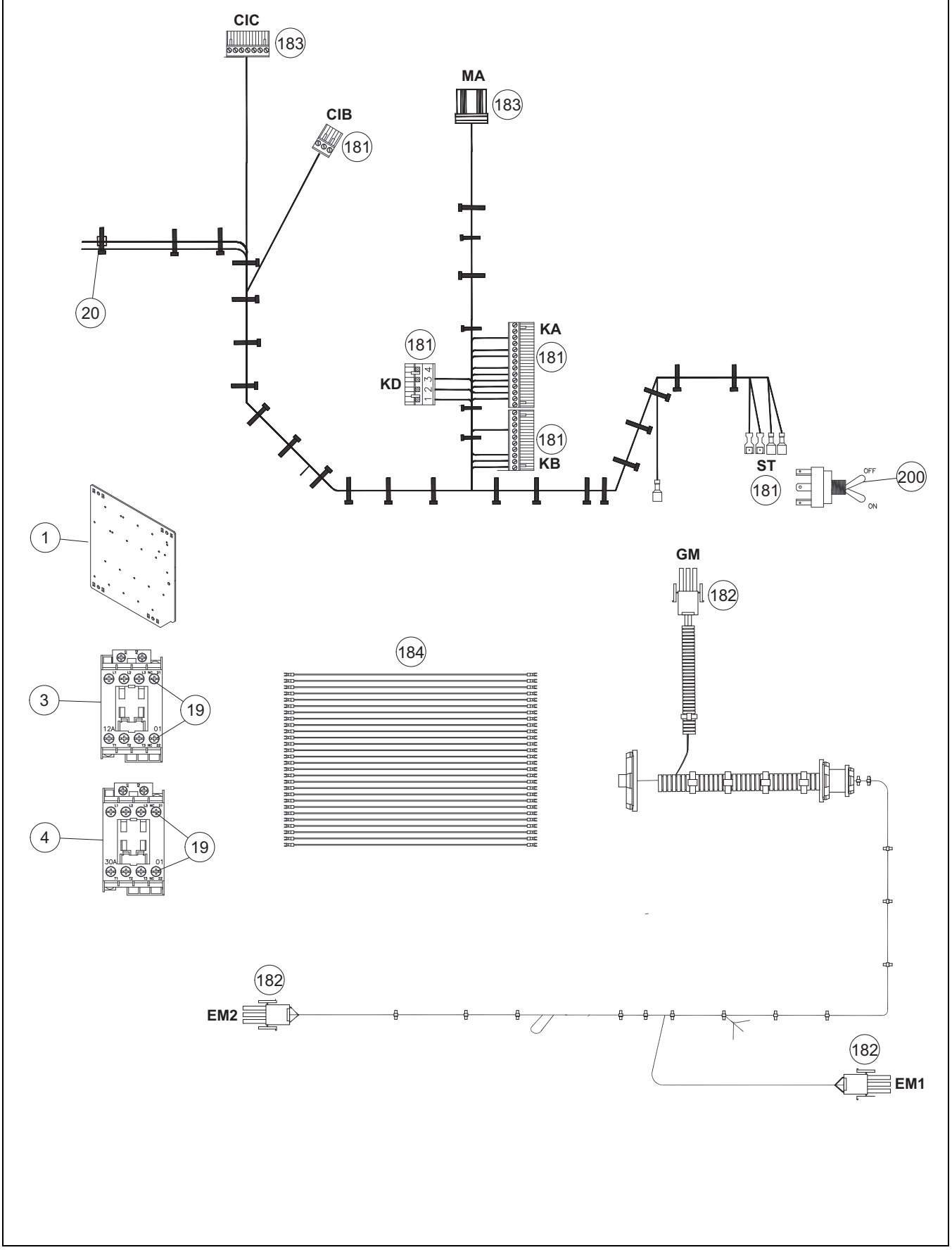

28 Wire Harness, High Voltage

Item	Part Number	Description	Qty
	91-00482-00	Wire Harness, High Voltage (PID NT5001)	1
	91-00493-00	Wire Harness, High Voltage (PIDs NT5000, NT5002 to 5011)	1
	91-00513-00	Wire Harness, High Voltage (PID NT5103)	1
1	68-17783-00	Panel	1
3	10-00431-00	Contactor	7
4	10-00431-10	Contactor	1
19	34-06243-00	Screw	16
20	58-04316-00	Base, Mounting	1
181	22-04374-00	Wiring Assembly White: Includes: Toggle Switch, KA / KB / KD / CIB Connector, Terminal	1
182	22-04375-00	Wiring Assembly Red (PID NT5001) Includes: EM1 / EM2 / GM Connectors, Seals, Plug, Grommets, Cap	1
	22-04450-00	Wiring Assembly Red (PIDs NT5000, 5002 to 5011) Includes: EM1 / EM2 / GM Connectors, Seals, Plug, Grommets, Cap	1
	22-04450-00	Wiring Assembly Red (PID NT5103) Includes: EM1 / EM2 / GM Connectors, Seals, Plug, Grommets, Cap	1
183	22-66695-04	Wiring Assembly: Includes: CIC Harness, MB Harness, MA Connector	1
184	22-66697-41	Wiring Assembly	1
200	10-01129-23	Toggle Switch	1

29 Power Cord and Plug

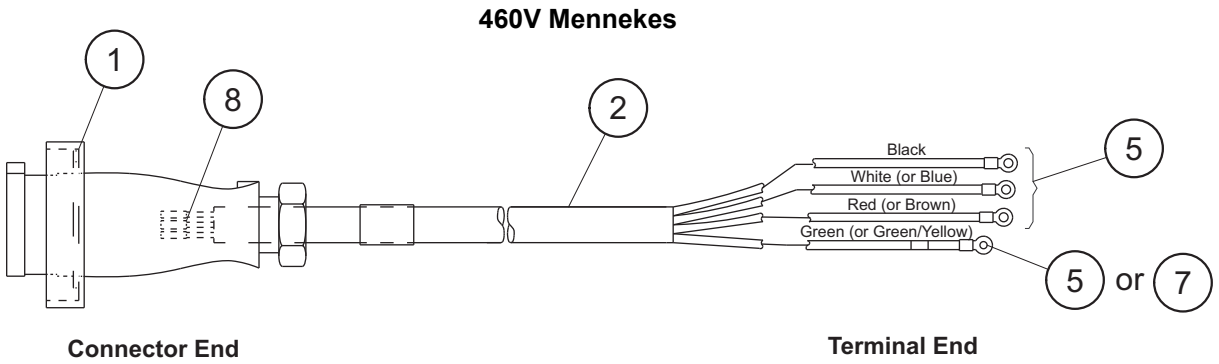

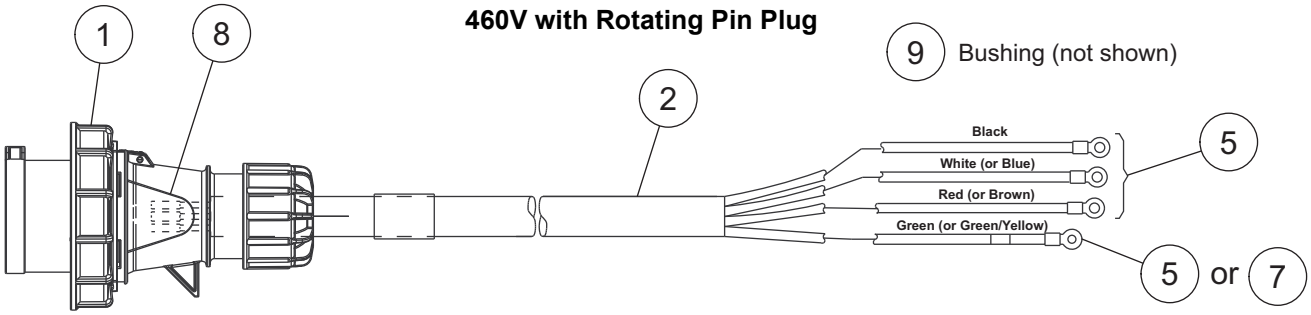

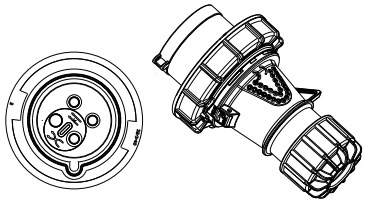

Item	Part Number	Description	Qty
		460V Mennekes	
1	22-02378-00	Power Plug 4 Pole	1
	22-02378-00PK10	Power Plug 4 Pole, 10 pack	
2	22-66651-00	Cable Transicord Flexline	1
5	22-00119-03	Terminal	3
7	22-00119-04	Terminal, Ring	1
8	22-02324-01	Bushing	4
		460V with Rotating Pin Plug	
1	22-66736-00	Plug	1
2	22-66651-00	Cable Transicord Flexline	1
5	22-00119-03	Terminal	3
7	22-00119-04	Terminal, Ring	1
8	22-02324-01	Bushing	3
9	22-02324-11	Bushing	1

30 Cable Kit

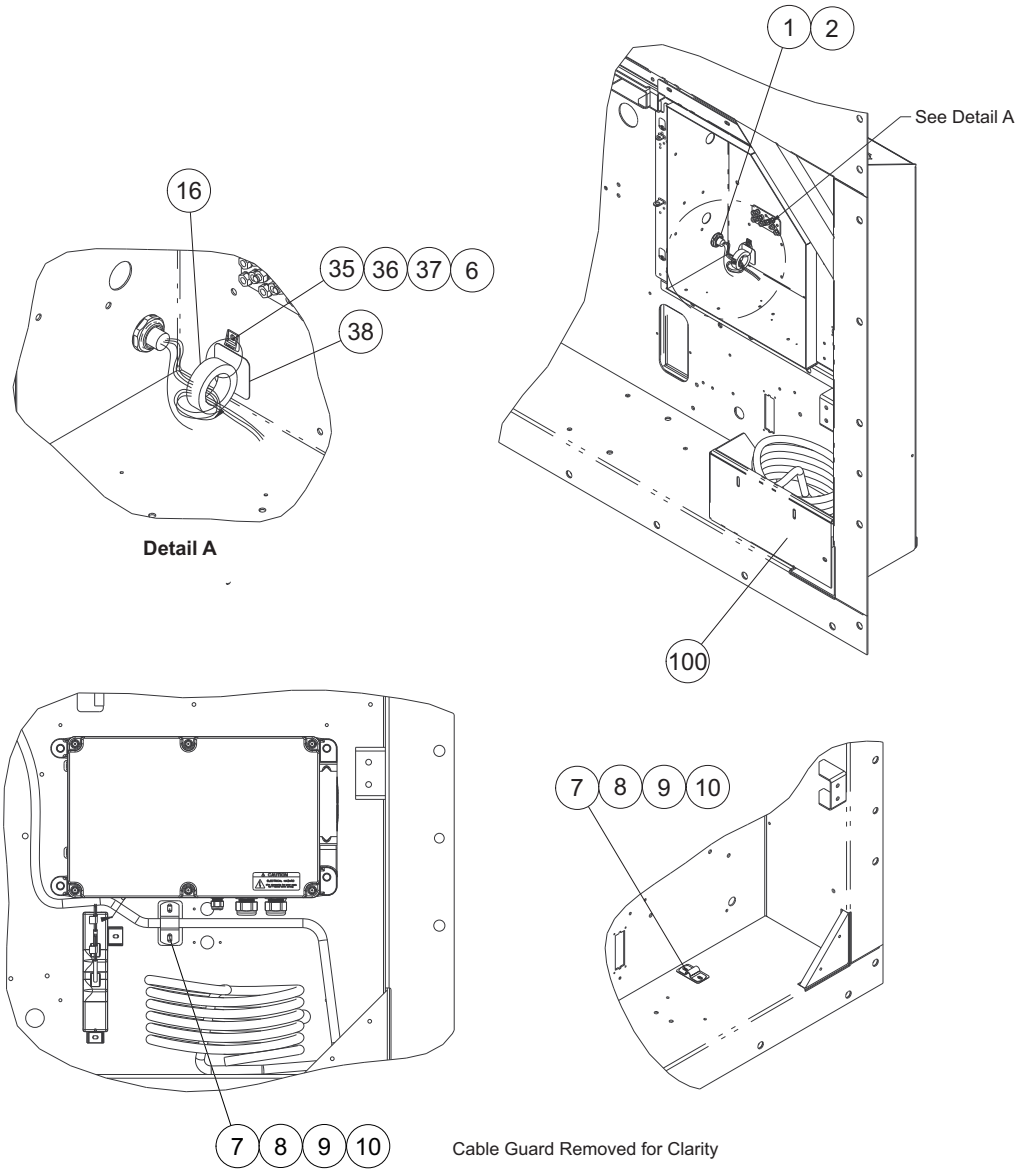

Item	Part Number	Description	Qty
1	22-66793-00	Gland	1
2	22-66794-00	Nut	1
6	66-U---1--3882	Wire Tie	1
7	68-14456-01	Cable Clamp	1
8	58-04026-07	Protector	1
9	66-U---1--5361-25	Screw, Cap Hex Head	2
10	66-U---1--5321-7	Washer, Plain	2
16	22-04412-00	Ferrite Core	1
35	66-U---1--5371-7	Screw, Mach Hex Head	1
36	34-00663-09	Washer, Lock	1
37	58-04246-00	Ty-Rap Base	1
38	58-04026-107	Protector	1
100	68-17939-00	Guard	1

31 Cable Restraint

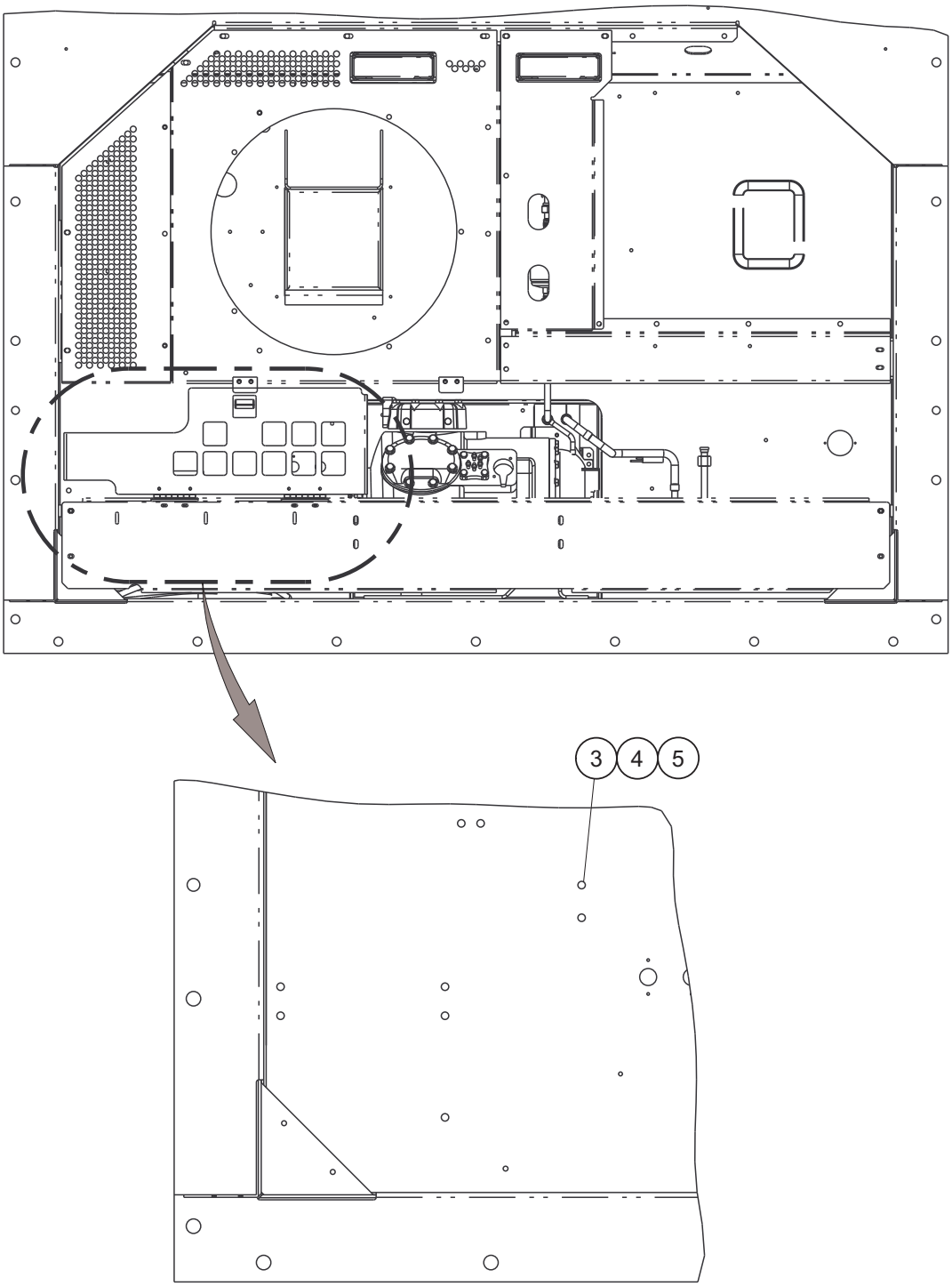

Provision For Cable Restraint

Item	Part Number	Description	Qty
3	66-U---1--5321-7	Washer, Plain	2
4	66-U---1--5361-25	Screw, Cap Hex Head	2
5	34-06053-03	Washer	2

32 Labels

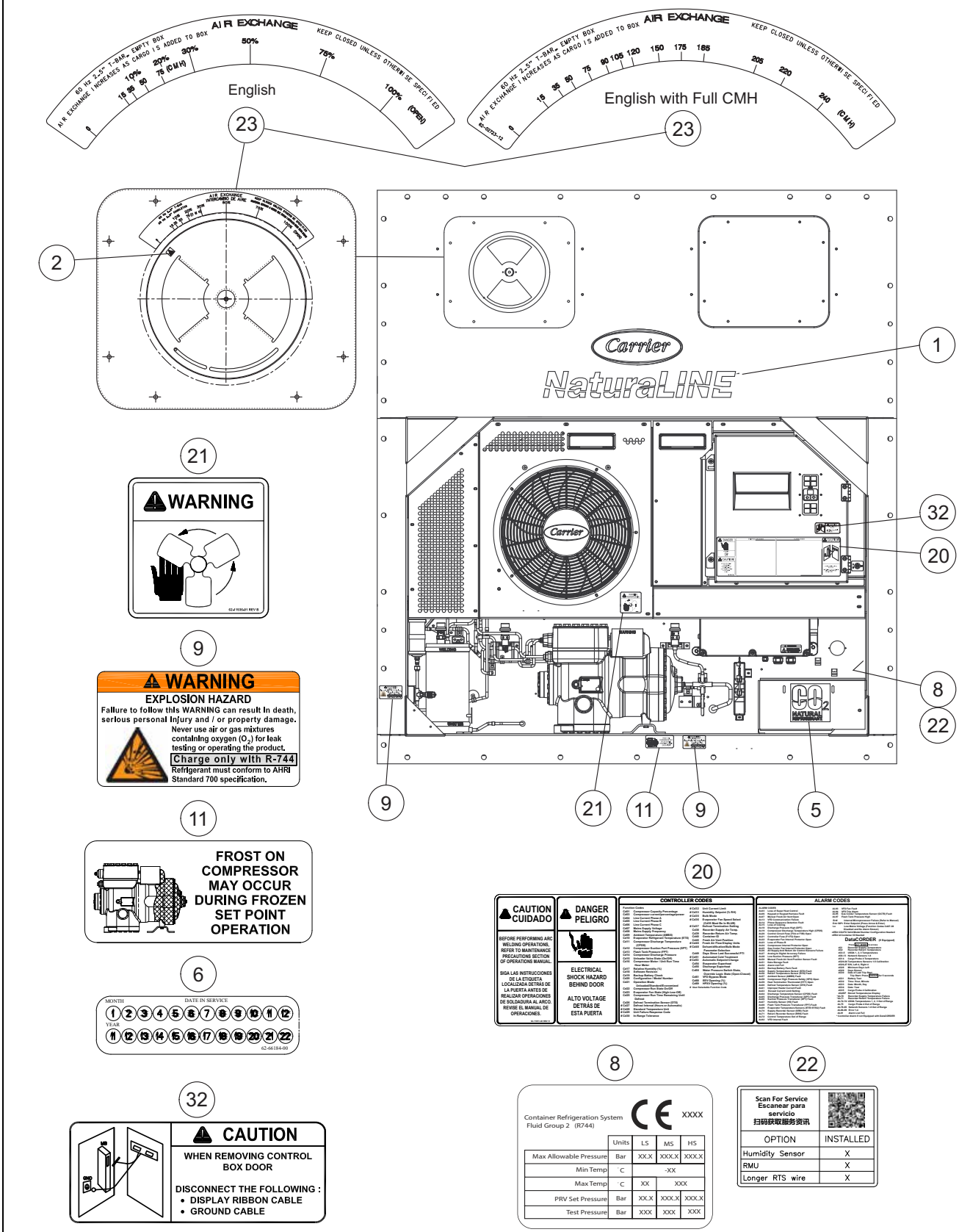
AIR EXCHANGE
KEEP CLOSED UNLESS OTHERWISE SPECIFIED
English
English with Full CMH
Carrier
NaturaLINE
WARNING
EXPLOSION HAZARD
Failure to follow this WARNING can result in death, serious personal injury and / or property damage.
Never use air or gas mixtures containing oxygen (O_2) for leak testing or operating the product.
Charge only with R-744
Refrigerant must conform to AHRI Standard 700 specification.
FROST ON COMPRESSOR MAY OCCUR DURING FROZEN SET POINT OPERATION
CAUTION
WHEN REMOVING CONTROL BOX DOOR
DISCONNECT THE FOLLOWING :
• DISPLAY RIBBON CABLE
• GROUND CABLE
CAUTION CUIDADO
DANGER PELIGRO
ELECTRICAL SHOCK HAZARD BEHIND DOOR
ALTO VOLTAGE DETRÁS DE ESTA PUERTA
CONTROLLER CODES
ALARM CODES
Container Refrigeration System
Fluid Group 2 (R744)
XXXX
Scan For Service
Escanear para servicio
OPTION
INSTALLED
Humidity Sensor
RMU
Longer RTS wire

32 Labels

Item	Part Number	Description	Qty
1	62-11952-00	Label, NaturaLINE, 29.5 inches wide	1
	62-11952-00	Label, NaturaLINE, 23 inches wide	1
2	66CH---1--1002-33	Label, > (Arrow)	1
5	62-66166-00	Label, CO2	1
6	62-66184-00	Label, Date	1
8	62-11925-00	Label, CE	1
	62-11925-01	Label, CE, for MCHE Gas Cooler and 5 Row Evaporator Coil	1
9	62-66081-01	Label, Warning Refrigerant	2
11	62-66170-00	Label, Compressor (Frost)	1
20	62-11951-01	Label, Code-Caution English	1
	62-11951-00	Label, Code-Caution English / Spanish	1
21	62-11936-01	Label, Fan Warning English	1
	62-11936-03	Label, Fan Warning English / Spanish	1
22	62-66160-20	Label, Options (PID NT5000)	1
	62-11935-21	Label, Options (PID NT5001)	1
	62-66160-21	Label, Options (PID NT5002)	1
	62-66160-35	Label, Options (PID NT5003, NT5004, NT5010, NT5011)	1
23	62-02723-00	Label, Upper Air	1
	62-02723-12	Label, Upper Air, Full CMH	1
32	62-11748-01	Label, Caution	1

33 Back Panel Assembly

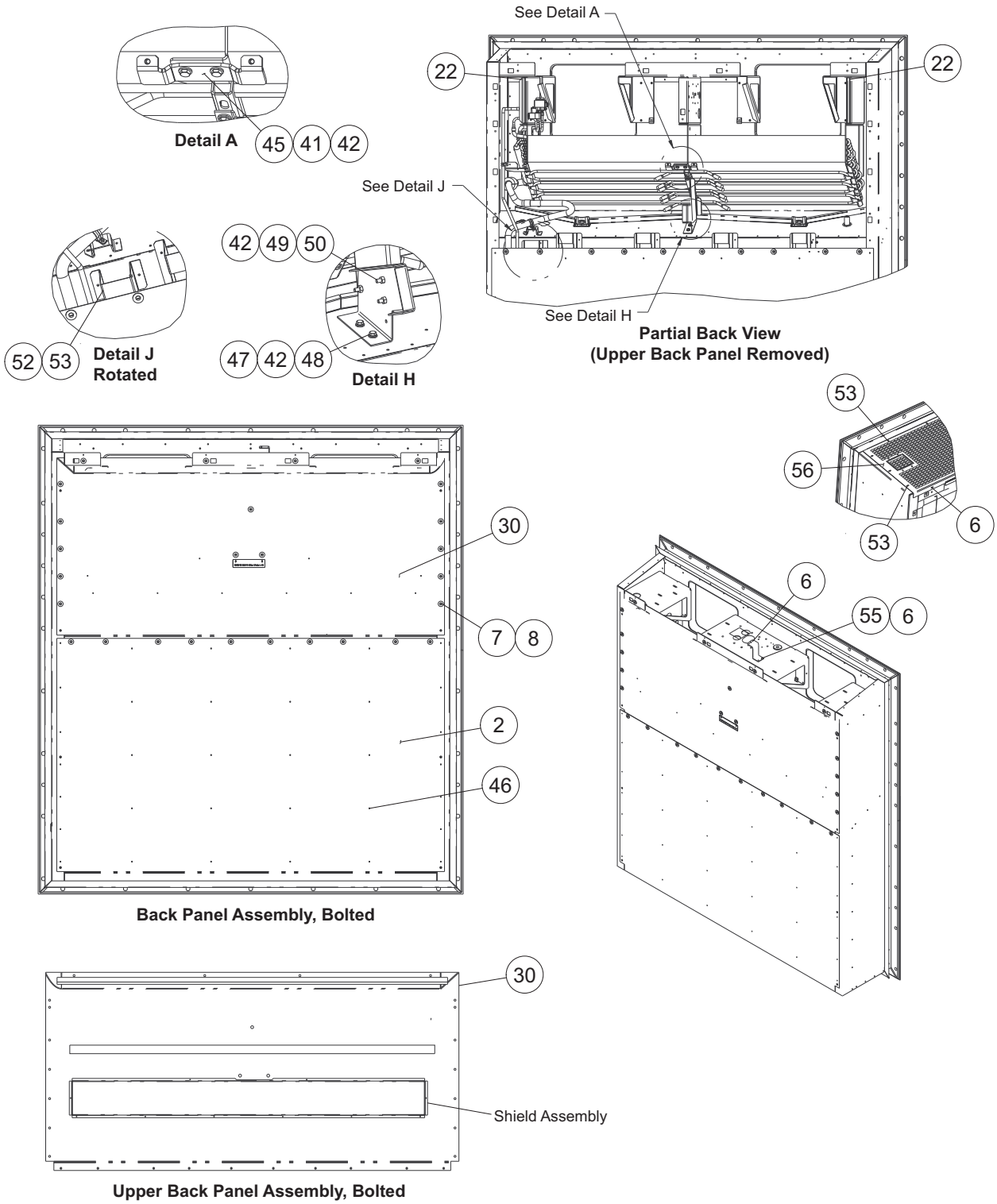

33 Back Panel Assembly

Item	Part Number	Description	Qty
2	68-86319-00	Panel, Back	1
6	34-00928-09	Rivet, Blind	8
7	69NT--35--2692	Washer, Fender	27
8	66-U---1--2403	Screw, Mach Trhd	27
22	66-U---1--2593-4	Gasket	2
30	79-66060-00	Panel Assembly, Back, Bolted - Includes	1
a	68-86470-00	Panel Assembly, Back	NSS
b	79-66059-00	Shield Assembly	NSS
c	42-00174-34	Gasket	1
d	42-00334-00	Gasket	1
e	62-66776-01	Label, Bolt Torque Warning	1
f	62-11729-00	Label, USDA	1
g	34-00928-20	Rivet, Blind	20
41	34-00655-04	Screw, Cap Hxhd	2
42	66-U---1--5321-3	Washer, Plain	7
45	68-17175-00	Bracket	1
46	34-00928-01	Rivet, Blind	34
47	68-18023-00	Bracket	1
48	34-06269-12	Screw, Lag	2
49	34-00663-11	Washer, Lock	3
50	66-U---1--5361-25	Screw, Cap Hxhd	3
52	68-17640-00	Channel	1
53	34-00928-07	Rivet, Blind	15
55	68-16521-00	Bracket	1
56	68-86304-00	Grille	1

34 Handle Kit (Without Handles)

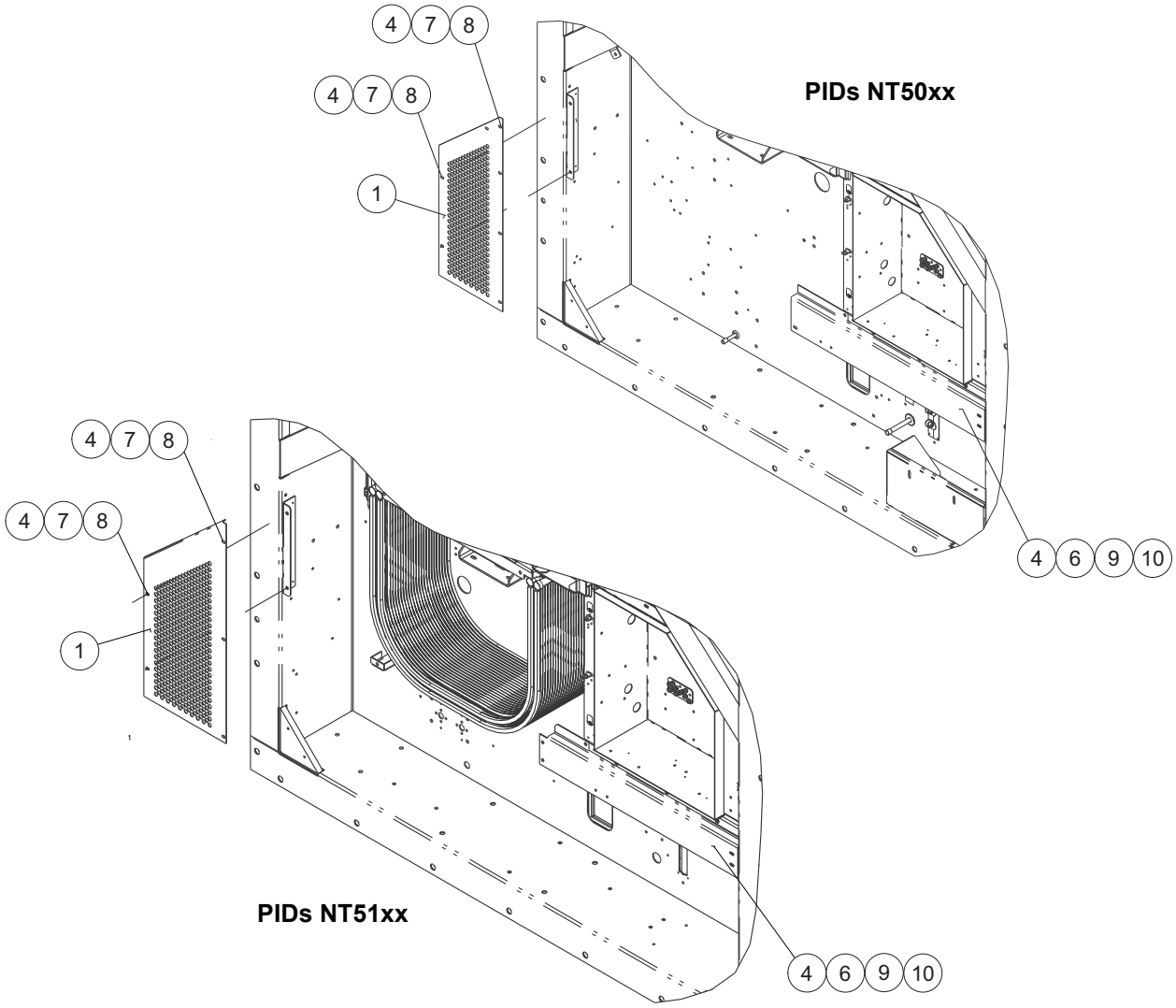

Item	Part Number	Description	Qty
1	68-18296-00	Panel (PIDs NT50xx)	1
	68-18547-00	Panel (PIDs NT51xx)	1
4	66-U---1--5361-25	Screw, Cap Hxhd	10
6	68-18297-01	Cover (PIDs NT50xx)	1
	68-18560-00	Cover (PIDs NT51xx)	1
7	34-06053-18	Washer, Retaining	7
8	66-U---1--5321-3	Washer, Plain	7
9	66-U---1--5321-7	Washer, Plain	3
10	34-06053-00	Washer	3

35 Vacuum Valve Assembly

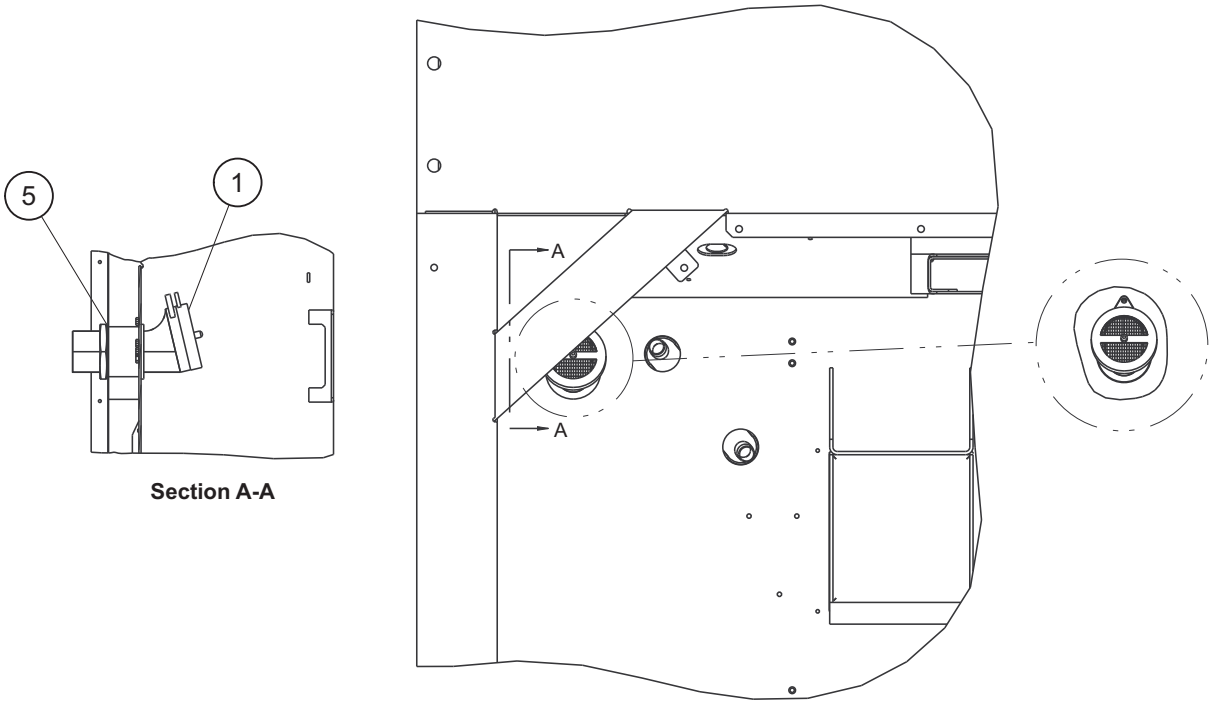

Item	Part Number	Description	Qty
1	40-66616-00	Vacuum Relief Valve	1
5	42-66617-00	Seal	1

INDEX

Numerics

07-00593-00 1–2, 7–26
10-00388-00 10–53, 10–55
10-00431-00 28–113
10-00431-10 28–113
10-00482-00 5–12
10-00482-20SV 5–12
10-00560-01 6–15
10-00563-00 10–55
10-01129-20 23–94
10-01129-23 28–113
12-00170-08 27–100, 27–102, 27–104, 27–106, 27–108, 27–110
12-00395-01SV 27–101, 27–103, 27–105, 27–107, 27–109, 27–111
12-00433-09RP 21–84, 21–88
12-00495-00 27–101, 27–102, 27–104, 27–106, 27–108, 27–110
12-00495-01 27–101, 27–102, 27–104, 27–106, 27–108, 27–110
12-00500-01SV 10–53, 10–55
12-00500-03 27–101, 27–102, 27–104, 27–106, 27–108, 27–110
12-00500-13 27–100, 27–102, 27–104
12-00500-21 27–106, 27–108, 27–110
12-00573-00SV 22–92, 22–93
12-00603-00 2–7
12-00688-02 5–12
12-00688-03 8–31, 8–47
12-00726-01 27–101, 27–102, 27–104, 27–106, 27–108, 27–110
12-00754-00 21–86, 21–90
12-00887-02 7–22, 7–26
12-00887-03 8–37, 8–42
12-01071-02 8–48
12-55013 20–75, 20–78, 20–82
14-00176-01 8–32, 8–38, 8–43
14-00382-00 10–53, 10–55
14-00394-01 7–17, 7–21, 7–25, 8–32, 8–38, 8–43, 8–48
14-00394-20 7–17, 7–21, 7–25, 8–32, 8–38, 8–43, 8–48
14-00396-00 8–31, 8–37, 8–42, 8–47
14-00396-10 8–31, 8–37, 8–42, 8–47
14-00406-01 8–31, 8–37, 8–42, 8–47
14-00406-04 8–31, 8–47
14-00406-20 8–32, 8–38, 8–43, 8–48
14-00407-03 8–31, 8–47
14-00413-00 8–32, 8–38, 8–43, 8–48
14-00472-01 8–37, 8–42
22-00119-03 29–114
22-00119-04 29–114
22-01613-06 27–101, 27–103, 27–105, 27–107, 27–109, 27–111
22-01613-07 27–101, 27–103, 27–105, 27–107, 27–109, 27–111
22-01613-10 27–101, 27–103
22-01613-11 27–101, 27–103
22-01613-13 27–101, 27–103, 27–105, 27–107, 27–109, 27–111
22-01660-12 27–101, 27–103, 27–105, 27–107, 27–109, 27–111
22-01660-14 27–101, 27–103, 27–105, 27–107, 27–109, 27–111
22-01713-24 27–103
22-01777-00 27–100, 27–102, 27–104, 27–106, 27–108, 27–110
22-01777-01 27–100, 27–102, 27–104, 27–106, 27–108, 27–110
22-01777-02 27–100, 27–102, 27–104, 27–106, 27–108, 27–110
22-01777-03 27–100, 27–102, 27–104, 27–106, 27–108, 27–110
22-01777-04 27–100, 27–102, 27–104, 27–106, 27–108, 27–110
22-01777-06 27–101, 27–102, 27–104, 27–106, 27–108, 27–110
22-01777-07 27–101, 27–102, 27–104, 27–106, 27–108, 27–110
22-01835-00 27–101, 27–103, 27–105, 27–107, 27–109, 27–111
22-02205-00 8–32, 8–48, 24–95, 25–96
22-02302-03 5–12, 6–15
22-02319-10 5–12, 6–15
22-02319-11 5–12, 6–15
22-02319-12 20–75, 20–78
22-02319-13 20–75, 20–78
22-02324-01 29–114
22-02324-11 29–114
22-02378-00 29–114
22-02378-00PK10 29–114
22-02392-00 27–101, 27–102, 27–104, 27–106, 27–108, 27–110
22-02448-00 27–101, 27–102, 27–104, 27–106, 27–109, 27–111
22-04214-02 20–75, 20–78, 20–82
22-04281-00 27–101, 27–103, 27–105, 27–107, 27–109, 27–111
22-04287-00 5–12
22-04374-00 28–113
22-04375-00 28–113
22-04412-00 30–115

22-04413-01 27–100, 27–102
22-04413-05 27–100
22-04413-07 27–100, 27–104, 27–106
22-04527-06 27–100, 27–110
22-66651-00 29–114
22-66695-04 28–113
22-66697-02 27–101, 27–103
22-66697-23 22–92
22-66697-24 19–73
22-66697-40 5–12, 6–15
22-66697-41 28–113
22-66697-42 27–101, 27–103, 27–105, 27–107, 27–109, 27–111
22-66701-00 22–93
22-66736-00 29–114
22-66789-09 27–100, 27–108
22-66793-00 30–115
22-66793-01 20–82
22-66794-00 30–115
22-66794-01 20–82
22-66798-00 25–96
24-00006-20 13–61
34 19–73
34-00373-07 6–15
34-00373-51 7–22, 7–26, 8–38
34-00373-59 8–48
34-00616-06 11–57, 11–59
34-00655-04 33–121
34-00655-06 17–68
34-00655-08 11–57, 11–59
34-00655-10 13–61, 16–64, 17–68, 19–73
34-00663-09 30–115
34-00663-11 10–53, 10–55, 11–57, 11–59, 13–61, 33–121
34-00667-11 8–32, 8–38, 8–43, 8–48, 19–73
34-00667-12 9–51
34-00792-07 17–68
34-00795-17 11–57, 11–59
34-00928-01 19–73, 33–121
34-00928-04 17–68
34-00928-07 10–53, 10–55, 17–68, 33–121
34-00928-09 17–68, 33–121
34-00928-13 20–75
34-00928-20 2–7, 18–70, 33–121
34-00928-21 17–68
34-01142-01 19–73
34-01146-06 5–12, 6–15
34-01152-10 5–12, 6–15
34-01178-22 20–75, 20–78, 20–82
34-01178-23 20–75, 20–78, 20–82
34-01181-01 9–51
34-06053-00 7–22, 8–30, 8–36, 8–42, 8–46, 17–68, 20–75, 20–78, 20–82, 21–85, 21–89, 34–122
34-06053-02 5–12, 6–15, 8–30, 8–36, 8–42, 8–46, 9–51
34-06053-03 8–48, 19–73, 20–75, 20–78, 20–82, 31–116
34-06053-05 5–12, 6–15, 7–17, 7–21, 7–25, 8–30, 8–36, 8–42, 8–46, 17–68, 21–85, 21–89, 24–95
34-06053-15 17–68
34-06053-18 4–9, 34–122
34-06053-19 2–7
34-06107-00 21–85, 21–89
34-06124-00 17–68
34-06124-01 17–68
34-06142-00 15–63, 24–95
34-06165-08 11–57
34-06169-00 21–85, 21–89
34-06185-01 2–7
34-06212-10 21–86, 21–90
34-06212-17 4–9
34-06243-00 28–113
34-06269-12 17–68, 33–121
34-06295-00 7–18, 7–21, 8–31, 8–37, 8–42, 8–47
34-06354-00 20–75, 20–78, 20–82
34-06355-00 20–75, 20–78, 20–82
34-66627-00 4–9
34-66630-00 21–86, 21–90
34-66644-00 4–9
34-66687-11 21–85, 21–89
38-00626-00 11–57, 11–59
38-00639-01 9–51
40-00168-02 7–22, 7–26
40-00701-01 8–31, 8–47
40-00702-01 8–32, 8–48
40-00707-00 7–17, 7–21, 7–25
40-00707-01 7–17, 7–21, 7–25, 8–31, 8–37, 8–43, 8–47
40-00709-00 8–30, 8–47
40-00709-01 6–15
40-00718-01 7–17, 7–21, 7–25
40-00772-01 7–18, 8–31, 8–37, 8–47
40-00783-00 7–18, 7–22, 7–25
40-00783-01 8–43
40-00784-00 7–17
40-00801-01 7–22, 7–26, 8–36, 8–42
40-00801-23 6–15, 7–22
40-00802-00 8–42
40-00802-01 7–22, 7–26, 8–37, 8–42
40-66616-00 35–123
40-66641-00 8–48

40-66642-00 8–48
40-66645-00 7–21
40-66646-00 7–21, 7–25
42-00032-13 8–32, 8–38, 8–43
42-00174-34 33–121
42-00271-00 21–86, 21–90
42-00296-01 2–6
42-00327-00 2–6
42-00334-00 33–121
42-00407-00 2–6
42-00425-135 7–22, 7–25
42-00425-149 7–22, 7–25
42-00425-150 7–22, 7–25
42-00425-151 7–22, 7–25
42-00425-153 7–22, 7–25
42-00425-154 7–22
42-00425-160 7–22, 7–25
42-00425-164 7–26
42-00465-03 8–31, 8–37, 8–47
42-00570-00 17–68
42-00726-00 7–17, 7–21, 7–25, 8–32, 8–38, 8–43, 8–48
42-00741-00 21–85, 21–89
42-00805-00 8–31, 8–47
42-00805-01 7–17, 7–18, 7–21, 7–25
42-00805-02 5–11, 5–12, 6–15
42-00805-03 8–31, 8–37, 8–42, 8–43, 8–47
42-00805-04 7–17, 7–18, 7–21, 7–25
42-00805-05 7–22, 7–26
42-66617-00 35–123
42-66644-00 7–17, 7–21, 7–25
42-66645-00 22–93
42-66646-00 22–93
42-66647-00 8–31, 8–37, 8–42, 8–47
42-66647-01 8–31, 8–37, 8–47, 8–48
42-66647-03 8–31, 8–37, 8–47, 8–48
42-66647-04 8–31, 8–37, 8–48
42-66647-05 8–31, 8–37, 8–48
42-66647-08 8–31, 8–37, 8–47
42-66647-09 8–31, 8–37, 8–47
43-66647-00 8–31, 8–47
44-00300-04 21–85
44-00361-01 17–68
44-00370-02 5–12, 6–15, 7–17, 7–21, 7–25, 8–31, 8–37, 8–42, 8–47, 10–53, 10–55, 17–68
44-00370-03 10–55
44-00391-00 21–84, 21–88
44-00477-00 21–85, 21–89
44-01041-04 20–75, 20–78, 20–82
46-00025-05 8–36, 8–42
46-00053-00 8–38
46-00058-00 5–12, 8–31, 8–37, 8–42, 8–47
48-00413-00 11–57
54-00648-20 11–57, 11–59
54-00677-20 9–51
56-08645-00 7–17, 7–21, 7–25, 8–30, 8–37, 8–42, 8–47
56-08792-00 8–32, 8–38, 8–48
56-08822-00 8–32, 8–37, 8–48
56-08841-00 8–32, 8–38, 8–48
56-08853-00 8–32, 8–48
56-08881-00 7–17, 7–21
56-08921-00 10–53
56-09112-00 10–53
56-09328-00 7–17, 7–21
56-09329-00 8–32
56-09331-00 8–31, 8–37, 8–47
56-09332-00 8–31, 8–47
56-09334-00 8–31, 8–37, 8–47
56-09335-00 8–32, 8–48
56-09344-00 10–53
56-09350-00 7–17, 7–21
56-09378-00 8–31, 8–37, 8–47
56-09382-00 10–53
56-09383-00 8–31, 8–47
56-09397-00 7–17, 7–21
56-09445-00 10–53
56-09467-00 7–17, 7–21, 7–25
56-09468-00 7–17, 7–21
56-09469-00 7–18
56-09471-00 7–17
56-09473-00 17–68
56-09474-00 17–68
56-09477-00 8–48
56-09479-00 8–48
56-09592-00 8–37
56-09622-00 8–32, 8–38, 8–43
56-09623-00 8–32, 8–38
56-09631-00 8–43
56-09632-00 10–55
56-09633-00 10–55
56-09634-00 8–42
56-09636-00 8–42
56-09638-00 10–55
56-09639-00 10–55
56-09640-00 10–55
56-09641-00 8–38, 8–43
56-09646-00 8–43
56-09651-00 7–25
56-09661-00 7–25
56-09664-00 7–22, 7–26
56-09665-00 7–25

56-09666-00 8–38, 8–43
56-09667-00 7–22, 7–26
56-09668-00 8–43
56-09669-00 7–26
56-09670-00 7–26
56-09672-00 10–55
56-09674-00 8–38
56-09676-00 8–37
56-09705-00 10–55
56-09707-00 8–37
56-09731-00 8–43
56-66064-00 8–32, 8–37
56-66067-00 8–32
56-66089-00 8–38
56-66092-00 7–22
56-66093-00 7–22
56-66148-00 8–43
56-66149-00 8–42
56-66150-00 8–42
56-66151-00 8–43
56-66152-00 7–26, 8–43
56-66153-00 8–43
56-66154-00 8–43
56-66155-00 8–42
56-66156-00 8–43
58-00065-78 5–12, 6–15
58-00701-03 19–73
58-00849-02 20–75, 20–78, 20–82
58-00849-03 20–75, 20–82
58-00957-02 8–48
58-00969-00 20–82
58-01097-00 8–32, 8–48, 25–96
58-04026-07 30–115
58-04026-107 30–115
58-04026-113 9–51
58-04026-116 5–12
58-04026-118 8–32, 8–38, 8–48
58-04026-119 8–32, 8–38, 8–43, 8–48
58-04026-135 8–30, 8–36, 8–42, 8–47
58-04026-32 19–73
58-04026-38 8–32, 8–38, 8–43, 8–48
58-04026-94 5–12, 6–15
58-04026-95 5–12
58-04101-00 21–85, 21–89
58-04101-02 21–85, 21–89
58-04246-00 20–75, 30–115
58-04273-00 10–53, 20–75, 20–78, 20–82
58-04277-00 27–101, 27–103, 27–105, 27–107, 27–109, 27–111
58-04279-00 20–75, 20–78, 20–82
58-04315-00 17–68
58-04316-00 5–12, 20–82, 21–84, 21–88, 28–113
58-04321-08 8–48
58-04321-34 5–12, 6–15
58-04366-00 21–85, 21–89
58-04456-00 21–86, 21–90
58-04539-10 17–68
58-04539-11 17–68
58-04539-15 12–60
58-04539-16 17–68
58-04539-17 17–68
58-04680-00 19–73
58-04770-00 11–57
58-04910-05 8–32, 8–38, 8–48
58-04910-13 8–31, 8–37, 8–47
58-04910-14 8–31, 8–37, 8–47
58-04910-19 8–30, 8–36, 8–47
58-04910-24 8–43
58-04910-25 7–26, 8–43
58-04954-00 21–85, 21–89
58-04960-00 21–84
58-04968-00 17–68
58-04980-00 9–51
58-04990-00 17–68
58-05145-00 21–88
58-66635-00 17–68
58-66677-00 22–93
58-66678-00 22–93
58-66679-00 22–93
58-66689-00 19–73
58-66699-00 2–7
62-02723-00 32–119
62-02723-12 32–119
62-10530-52 8–38, 8–43
62-10530-53 8–38, 8–43
62-10911-00 19–73
62-10930-00 2–7
62-11270-25 20–75, 20–78
62-11270-29 20–82
62-11275-00 15–63
62-11729-00 15–63, 33–121
62-11731-00 23–94
62-11748-01 32–119
62-11916-00 25–96
62-11916-01 25–96
62-11925-00 32–119
62-11935-21 32–119
62-11936-01 32–119
62-11936-03 32–119
62-11951-00 32–119
62-11951-01 32–119

62-11952-00 32–119
62-11969-00 25–96
62-11969-01 25–96
62-12284-00 25–96
62-12284-01 25–96
62-66081-01 32–119
62-66086-00 5–12, 6–15
62-66087-00 5–12, 6–15
62-66160-20 32–119
62-66160-21 32–119
62-66160-35 32–119
62-66166-00 32–119
62-66170-00 32–119
62-66235-00 8–43
62-66776-01 33–121
65-00214-00 8–31, 8–37, 8–42, 8–47
66 3–8
66CH---1--1002-33 32–119
66-U---1--2403 21–84, 21–88, 33–121
66-U---1--2403-1 21–85, 21–89
66-U---1--2552-185 11–57, 11–59
66-U---1--2583-43 20–75, 20–78, 20–82
66-U---1--2593-4 33–121
66-U---1--3803 6–15
66-U---1--3803-19 7–26, 8–43
66-U---1--3882 8–32, 8–38, 8–43, 15–63, 20–78, 20–82, 21–88, 24–95, 30–115
66-U---1--3882-8 8–38, 8–43, 20–82
66-U---1--5321-13 2–7, 8–32, 8–38, 8–43, 8–48
66-U---1--5321-2 20–75, 20–78, 20–82
66-U---1--5321-3 8–32, 8–38, 8–43, 8–48, 10–53, 10–55, 11–57, 13–61, 16–64, 17–68, 19–73, 33–121, 34–122
66-U---1--5321-4 7–17, 7–21, 7–25, 8–30, 8–36, 8–42, 8–46
66-U---1--5321-5 5–11, 6–15
66-U---1--5321-7 7–22, 8–30, 8–36, 8–42, 8–46, 17–68, 19–73, 20–75, 20–78, 20–82, 30–115, 31–116, 34–122
66-U---1--5321-8 5–12, 6–15, 7–17, 7–21, 7–25, 8–30, 8–36, 8–42, 8–46, 10–53, 10–55, 17–68, 19–73, 20–75, 20–78, 20–82, 21–84, 21–88, 22–92, 22–93, 24–95
66-U---1--5361 7–17, 7–21, 7–25, 8–32, 8–38, 8–43, 8–48, 9–51
66-U---1--5361-11 13–61
66-U---1--5361-19 5–11, 6–15
66-U---1--5361-25 7–22, 8–30, 8–36, 8–42, 8–46, 10–53, 10–55, 16–64, 17–68, 20–75, 20–78, 20–82, 30–115, 31–116, 33–121, 34–122
66-U---1--5361-39 8–30, 8–36, 8–42, 8–46
66-U---1--5361-47 17–68
66-U---1--5361-53 9–51
66-U---1--5361-7 5–11, 6–15
66-U---1--5361-8 5–12, 6–15
66-U---1--5362-2 2–6
66-U---1--5371 20–75, 20–78, 20–82
66-U---1--5371-10 7–18, 7–22, 7–26, 8–43
66-U---1--5371-6 7–17, 7–21, 7–25, 8–30, 8–36, 8–42, 8–46, 10–53, 10–55, 17–68, 20–75, 20–78, 20–82
66-U---1--5371-7 5–12, 6–15, 8–30, 8–36, 8–42, 8–46, 15–63, 17–68, 19–73, 20–75, 20–78, 20–82, 21–84, 21–88, 22–92, 22–93, 24–95, 30–115
66-U---1--5381-1 10–53, 10–55
66-U---1--5381-3 10–53, 10–55
66-U---1--5562-2 2–6, 16–64
66-U---1--5562-7 19–73
66-U---1--6651-24 27–101, 27–102, 27–104, 27–106, 27–108, 27–110
66-U---1--8292-1 27–105, 27–107, 27–109, 27–111
66-U---1--9592-13 19–73
66-U---1--9752 23–94
66-U---2--1132-1 8–48
66-U---2--1142 8–48
66-U---2--1152 8–48
68-12933-07 2–6
68-12940-05 2–6
68-14456-01 30–115
68-16223-01 7–17, 7–21
68-16223-02 7–18
68-16246-00 10–53, 10–55
68-16335-01 8–30, 8–47
68-16409-01 8–31, 8–47
68-16498-04 18–70
68-16521-00 33–121
68-16607-01 7–18, 7–21
68-16696-05 17–67
68-16697-04 17–67
68-16735-00 21–84, 21–88
68-17026-00 5–12, 6–15
68-17080-00 10–53
68-17145-00 16–64
68-17175-00 33–121
68-17419-01 17–68
68-17461-02 21–85
68-17578-00 10–53, 10–55
68-17640-00 10–53, 33–121
68-17783-00 28–113
68-17810-00 20–75
68-17821-00 8–30, 8–36
68-17821-01 8–47

68-17825-00 8–31, 8–47
68-17827-00 7–17, 7–21
68-17828-00 8–32, 8–48
68-17939-00 17–68, 30–115
68-17940-00 16–64
68-17960-07 17–67
68-18023-00 33–121
68-18031-00 10–55
68-18032-00 13–61
68-18138-00 17–67
68-18295-00 8–31, 8–37, 8–47
68-18296-00 34–122
68-18297-01 34–122
68-18359-02 17–68
68-18365-00 24–95
68-18365-01 24–95
68-18559-00 8–42
68-18686-00 8–37
68-18688-00 8–38, 8–43
68-18689-00 8–38
68-18693-00 16–64
68-18698-00 8–36, 8–42
68-18699-00 10–55
68-18700-01 7–22
68-18701-00 7–22
68-18836-00 8–42
68-18967-00 8–37, 8–42
68-19150-00 8–42
68-19254-00 8–43
68-86230-00 19–73
68-86304-00 33–121
68-86307-00 17–67
68-86319-00 33–121
68-86470-00 33–121
69NT--35--2692 33–121
69NT--35--2692-1 8–48, 9–51, 11–57, 13–61, 16–64, 17–68, 20–75, 20–78, 20–82
69NT--35--3452 9–51
69NT--35--3452-1 9–51
69NT--35--3452-2 9–51
69NT--35--3452-3 9–51
69NT--43---295 11–57, 11–59
76-00675-04 1–3, 14–62
76-00892-00 7–18
76-00892-02 7–17
76-00892-05 5–12
76-00892-06 5–12
76-00892-07 8–31, 8–47
76-00892-08 7–18, 7–21, 7–25
76-00892-11 7–17, 7–21, 7–25
76-00892-12 5–11, 6–15
76-00892-14 7–17, 7–21, 7–25
76-00892-15 7–18
76-00932-00 6–15
76-66683-00 11–59
76-66685-00 7–22, 7–26
76-66685-01 8–37, 8–42
76-66685-02 7–21, 7–25
76-66694-00 14–62
79-01697-06SV 4–9
79-04018-10 21–84, 21–85
79-04018-11 21–84, 21–85
79-04172-23 5–11, 6–15
79-04180-20 8–48
79-04206-00 8–31, 8–37, 8–47
79-66017-11 21–88, 21–89
79-66059-00 33–121
79-66060-00 33–121
79-66669-04 21–84, 21–86, 21–88, 21–90
79-66720-12 18–70
79-66720-16 18–70
79-66735-02 8–32, 8–48
79-66743-02 24–95
79-66771-01 2–6
79-66775-00 15–63
79-66778-00 1–3, 2–7
79-66779-00 2–6
79-66779-04 2–6
81-04131-00 10–53, 10–55
81-04258-20 8–30, 8–36, 8–42, 8–46
81-04359-00 1–2, 10–55
86-04956-00 13–61
86-04959-00 5–12, 6–15
86-04987-05 21–85
86-04994-00 8–32, 8–38, 8–48
86-05003-12 18–70
86-05003-16 18–70
86-05389-00 8–43
86-66756-05 21–89
99TS0647CK002400 7–22
99TS0865CK002200 7–21, 7–25

A

--AT--14QA-172 5–12, 6–15
--AT--39JA-171 19–73, 22–92, 22–93
--AU--11JR-241 5–11, 6–15
--AU--27JR-131 21–84, 21–88
--AU--27JR-171 5–12, 6–15, 19–73, 20–75, 20–78, 20–82, 22–92, 22–93

B

Brazed Plate Water Cooled Condenser (WCC) 8–48

C

Compressor 5–11

D

Discharge Pressure Transducer (DPT) 8–31
Discharge Pressure Transducer (DPT), Brazed In 8–37, 8–42
Display Module 21–84

E

Economizer Solenoid Valve (ESV) 8–32
Economizer Solenoid Valve (ESV) Coil 8–32
Electronic Expansion Valve (EEV) 10–53
Evaporator Coil Assembly 10–53
Evaporator Coil Heater 13–61
Evaporator Fan 11–57
Evaporator Fan Motor (EM1, EM2) 11–57
Evaporator Temperature Sensors (ETS1 / ETS2) 10–53

F

Filter Drier 8–31
Flash Tank Pressure Relief Valve (FTPRV) 8–31
Flash Tank Pressure Relief Valve (FTPRV), Hoerbiger 8–37, 8–42
Flash Tank Pressure Transducer (FPT) 8–31
Flash Tank Pressure Transducer (FPT), Brazed In 8–37, 8–42
Flash Tank Receiver Assembly 8–31

G

Gas Cooler Coil Assembly 8–30
Gas Cooler Cover Assembly 8–31
Gas Cooler Fan Assembly 9–51
Gas Cooler Fan Motor 9–51

H

High Pressure Expansion Valve (HPXV) 8–31
High Pressure Expansion Valve (HPXV) Coil 8–31
High Pressure Switch (HPS) 7–18
High Side Pressure Relief Valve (HPRV) 7–17
High Side Pressure Relief Valve (HPRV), Hoerbiger 7–21, 7–25
High Side Service Valve 8–30
High Side Service Valve, Brazed In 8–36, 8–42

K

Key Pad Assembly 21–84

L

Low Side Pressure Relief Valve (LPRV) 7–18
Low Side Pressure Relief Valve (LPRV), Hoerbiger 7–22, 7–26
Low Side Service Valve 5–12, 6–15
Low Side Service Valve, Brazed In 7–22, 7–26

R

RMU Communication Module 22–93

S

Sensor, Supply Recorder Sensor (SRS) 27–105
Sensor, Supply Temperature Sensor (STS) 27–105
Suction Pressure Transducer (SPT) 5–12
Suction Pressure Transducer (SPT), Brazed In 7–22, 7–26

T

Thermistor, Ambient Temperature Sensor (AMBS) 27–104
Thermistor, Compressor Discharge Temperature Sensor (CPDS) 27–104
Thermistor, Defrost Temperature Sensor (DTS) 27–104
Thermistor, Evaporator Temperature Sensor (ETS1 / ETS2) 27–104
Thermistor, Return Recorder Sensor (RRS) 27–104
Thermistor, Return Temperature Sensor (RTS) 27–104
Thermostat, Heat Termination Thermostat (HTT) 27–104

U

Unloader Solenoid Valve (USV) 7–17
Unloader Solenoid Valve (USV) Coil 7–17

V

Vacuum Relief Valve 35–123
Variable Frequency Drive (VFD) 5–12
Variable Frequency Drive (VFD) Fan 5–12
Vent Position Sensor Kit 2–7

W

Water Pressure Switch (WCC) 8–48

Carrier Transicold Division,
Carrier Corporation
P.O. Box 4805
Syracuse, NY 13221 USA

www.carrier.com/container-refrigeration/