Carrier
A United Technologies Company
Carrier Transicold Division
Carrier Corporation
P.O. Box 4805
Syracuse, New York 13221

PART NO.	DESCRIPTION
98-02542-00	2 COMP. SYS. 1,2,3 & 4
98-02542-01	3 COMP. SYS. 5,6 &7
98-02542-02	3 COMP. SYS 13,14,15 & 16

MULTI-TEMP INSTALLATION PROCEDURE

IMPORTANT: INSTALLATION OF REMOTE EVAPORATORS MUST BE DONE, IN PART, BY A TECHNICIAN IN POSSESSION OF A CURRENT EPA SECTION 608 CERTIFICATION IN THE USA OR OTHER APPROPRIATE CERTIFICATION OUTSIDE THE USA.

1.0 SELECT LOCATION FOR REMOTE EVAPORATOR WHICH OPTIMIZES AIR CIRCULATION.

CAUTION: TRAILER MFR TO DETERMINE IF ADJUSTMENT IN CORNER MOULDING IS NECESSARY TO AVOID INTERFERENCE WITH EVAPORATOR MOUNTING

2.0 TRAILER MANUFACTURER TO PROVIDE SMOOTH FLAT SURFACE IN SAME PLANE TO ACCEPT MOUNTING OF EVAPORATOR. INSTALL REMOTE EVAPORATOR. SEE TRAILER PREPARATION SHEET 3.

3.0 THE EVAPORATOR(S) SHOULD BE MOUNTED WITH 1/2-13UNC (GRADE 5) CEILING MOUNTED STUDS PER EVAPORATOR DRAWING LOCATIONS. EVAPORATORS ARE DELIVERED WITH 16MM(0.63) HOLES.

3.1 IMPORTANT: ON AN 1100 EVAPORATOR, SHIMS(ITEM 105) ARE TO BE INSTALLED BETWEEN THE CEILING AND EVAPORATOR TO PROVIDE A SUFFICIENT DRAINAGE SLOPE. TWO (2) SHIMS ARE TO BE INSTALLED ON EACH MOUNTING STUD ON THE DRAINING SIDE OF THE EVAPORATOR AND ONE(1) SHIM INSTALLED ON THE CENTER MOUNTING STUDS. NO SHIMS ARE REQUIRED ON THE STUDS LOCATED FARTHEST FROM THE DRAIN SIDE OF THE EVAPORATOR. AN ADDITIONAL TWO (2) SHIMS ARE PROVIDED FOR SPECIAL MOUNTING APPLICATIONS (I.E. MOUNTING AN EVAPORATOR GUARD)

3.2 FOR 1100 EVAPORATORS ONLY, THE TWO (2) CENTER MOUNTING STUDS ARE NOT REQUIRED WHEN 1/2-13 STUDS ARE USED FOR THE FOUR (4) CORNER MOUNTING LOCATIONS.

4.0 TROUGH LOCATIONS:

4.1 WHEN USING A WALL TROUGH FOR TUBING AND ELECTRICAL WIRING, THE TROUGH SHOULD BEGIN AT A POINT 1-1/2 INCHES DOWN FROM THE CEILING. THIS WILL ALLOW THE TUBING FROM THE EVAPORATOR TO DIRECTLY ENTER TROUGH BEFORE MAKING THE FIRST BEND TOWARD THE HOST UNIT.

4.2 IF A CEILING TROUGH IS USED, THE TROUGH SHOULD CONTINUE TO WITHIN 6 INCHES FROM THE REAR OF A SINGLE DISCHARGE EVAPORATOR.

4.3 IF A WALL TROUGH IS USED, THE TROUGH SHOULD CONTINUE TO A POINT 6 INCHES PAST THE SIDE TUBING CONNECTIONS OF A DUAL DISCHARGE EVAPORATOR.

4.4 TROUGH SHOULD BE DESIGNED WITH MATERIAL TO STRUCTURALLY PROTECT REFRIGERANT AND ELECTRICAL LINES.

5.0 FOR TIGHT FIT APPLICATIONS FOR THE DUAL DISCHARGE REMOTE EVAPORATOR APPLICATIONS, SUCH AS 2200'S IN 96" WIDE TRAILERS, AND APPLICATIONS WHERE THE MINIMUM 3" IS NOT AVAILABLE, THE FOLLOWING SPECIAL INSTALLATION INSTRUCTIONS ARE RECOMMENDED.

5.1 BEFORE INSTALLING THE REMOTE EVAPORATOR, MEASURE AND INSTALL PIPING FROM THE EVAPORATOR. THE RADIUS OF THE 90° ELBOW SHOULD STAY INSIDE THE EVAPORATOR AND BE AS CLOSE TO THE UNIT AS POSSIBLE, WHILE LEAVING ENOUGH ROOM FOR THE INSULATION. A 7/8" OD SUCTION LINE FOR THE FIRST THREE FEET (APPROXIMATELY) MAY ASSIST IN THE UNIT FIT; THEN TRANSITION TO THE 1-1/8" OD SUCTION LINE.

5.2 REMOVE THE CONDENSATE LINE FROM THE END OF THE EVAPORATOR OPPOSITE THE REFRIGERANT LINES. DISCONNECT AND REMOVE THE 12VDC-RESISTANCE WIRE FROM SAME SIDE OF THE EVAPORATOR.

5.3 USE TWO CAP PLUGS(ITEM 95) AND SEAL THE DRAIN PAN OUTLET FROM THE OPENING CREATED WHEN REMOVING THE CONDENSATE LINES.

5.4 FIT SHIMS(ITEM 105) UNDER THE MOUNTING BOLTS IN ORDER TO TILT THE EVAPORATOR 3/4" ON THE SIDE THAT THE CONDENSATE WILL DRAIN. THIS WILL ALLOW CONDENSATE TO EFFECTIVELY DRAIN TO ONE SIDE OF THE UNIT.

6.0 REFRIGERANT LINE SIZES

⚠ 6.1 THE HOST UNIT HAS A 1-1/8" SUCTION LINE CONNECTION. WHEN CONNECTING ANY EVAPORATOR, RUN THE ENTIRE LENGTH OF THE SUCTION LINE WITH 1-1/8" PIPE.

6.2 THE REMOTE EVAPORATORS ARE SHIPPED FROM THE FACTORY WITH A LOW PRESSURE NITROGEN GAS CHARGE. BEFORE MAKING CONNECTION TO THE REMOTE EVAPORATOR, CAREFULLY REMOVE THE PLUGS FROM THE TUBES AND ADJUST THE TUBE LENGTHS FROM THE EVAP. AS DESIRED.

6.3 THE HOST UNIT HAS A 3/8" LIQUID LINE CONNECTION. WHEN CONNECTING ANY EVAPORATOR, RUN THE ENTIRE LENGTH OF THE LIQUID LINE WITH 3/8" PIPE.

6.4 THE SUCTION LINE MUST BE INSULATED. IT IS NOT NECESSARY TO INSULATE THE LIQUID LINE.

7.0 REFRIGERANT CONNECTIONS:

7.1 IT IS MANDATORY THAT NITROGEN FLUSHING BRAZE TECHNIQUES ARE USED ON EVERY BRAZE TUBING JOINT. THIS TECHNIQUE ELIMINATES OXIDATION FROM THE BRAZE ⚠ JOINTS, INTERNAL OXIDATION WILL REDUCE SYSTEM RELIABILITY.

CAUTION: THE KING VALVE AND DISCHARGE SERVICE VALVE MUST REMAIN FRONT SEATED UNTIL THE REMOTE EVAP REFRIGERATION CONNECTIONS ARE COMPLETED AND THE LOW SIDE OF THE SYSTEM IS EVACUATED.

7.2 TURN ALL REMOTE COMPARTMENT SWITCHES TO THE OFF POSITION.

7.3 CONNECT A GAUGE TO THE SUCTION SERVICE VALVE GAUGE PORT AND MID SEAT THE SUCTION SERVICE VALVE.

7.4 IF THE PRESSURE EXCEEDS 10psig, CONNECT LOW SIDE TO REFRIGERANT RECLAIM DEVICE AND RECLAIM UNTIL LOW-SIDE PRESSURE IS BELOW 10psig.

7.5 ONCE THE PRESSURE IS SAFE, REMOVE THE KING VALVE CAP AND THE GAUGE FROM THE SUCTION SERVICE GAUGE PORT.

7.6 PUT THE UNIT INTO SERVICE MODE, THE MICRO DISPLAY WILL SHOW "ENTERING SERVICE MODE", THE EVXV AND CSMV WILL OPEN TO 100%, ONCE THEY ARE OPEN THE MICRO WILL SHOW "RECOVER/LEAK CHK/EVAC MODE".

NOTE: THE DOES SWITCH MUST REMAIN ON DURING THIS PROCESS OR THE UNIT WILL AUTOMATICALLY EXIT SERVICE MODE AND CLOSE ALL OF THE VALVES.

7.7 CONNECT NITROGEN GAS AND PURGE INTO KING VALVE, ALLOW GAS TO FLOW THROUGH THE LOW SIDE OF THE SYSTEM AND OUT THE SUCTION SERVICE VALVE GAUGE PORT.

CAUTION: FLOW SHOULD BE MINIMAL IN ORDER TO MAKE PROPER BRAZING CONNECTIONS WITHOUT JOINT BLOWOUT AND TO SAFELY REMOVE THE LIQUID AND SUCTION LINE CAPPED TUBES FOR CONNECTION TO THE REMOTE EVAPORATOR.

7.8 UNBRAZE CAPPED TUBES FROM HOST UNIT LIQUID AND SUCTION CONNECTIONS AT ROADSIDE TOP REAR OF UNIT.

7.9 MAKE ALL ELECTRICAL CONNECTIONS IN REMOTE EVAP; MUST BE COMPLETED BEFORE BRAZING.

7.10 TURN ON REMOTE COMPARTMENT SWITCH AND PUT UNIT INTO SERVICE MODE. THIS WILL NOW ALSO OPEN THE LSV IN THE REMOTE,ALLOWING NITROGEN TO FLOW THROUGH THE REMOTE EVAPORATOR.

7.11 FIT COPPER LINES FROM HOST UNIT CONNECTIONS TO REMOTE EVAP AND CONTINUE NITROGEN GAS PURGE THROUGH ALL BRAZE CONNECTIONS.

7.12 ONCE ALL BRAZE CONNECTIONS ARE COMPLETED LEAK CHECK THE LOW SIDE OF THE SYSTEM.

7.13 AFTER LEAK CHECK,EVACUATE THE LOW SIDE OF THE SYSTEM FROM THE KING VALVE AND THE SUCTION SERVICE VALVE GAUGE PORT, DURING EVACUATION THE MICRO DISPLAY WILL SHOW "EVAC/CHARGE MODE". EVACUATE TO 500 MICRONS.

7.14 AFTER EVACUATION IS COMPLETE OPEN THE KING VALVE.

7.15 AS THE PRESSURE RISES IN THE LOW SIDE OF THE SYSTEM THE EVXV,CSMV AND THE LSV WILL ALL CLOSE AND THE MICRO DISPLAY WILL SHOW "CHARGE MODE - HOLD = TO EXIT THE = MUST BE PRESSED AND HELD FOR SIX SECONDS TO EXIT THIS MODE".

7.16 REMOVE GAUGES, BACKSEAT ALL SERVICE VALVES, RE-INSTALL SERVICE VALVE CAPS.

7.17 SEE SERVICE MANUAL FOR ADDITIONAL INFORMATION.

CAUTION: DISCONNECT ALL BATTERIES BEFORE WORKING ON ELECTRICAL SYSTEM.

8.0 ELECTRICAL CONNECTIONS:

(D) 8.1 LOCATE AND REMOVE ACCESS PANEL FROM HOST UNIT EVAPORATOR. LOCATE CONNECTORS AND CLIP WIRE TIES SECURING CONNECTORS TO EVAP FRAME. CONNECT REMOTE EVAPORATOR CABLES AND PLACE CABLE GROMMETS INTO HARNESS OPENINGS. SECURE CONNECTORS AND CABLE INSIDE EVAP FRAME USING WIRE TIES. RE-INSTALL COVER AND MAKE SURE GROMMETS ARE SECURE.

(D) NOTE: ON 3 COMPARTMENT UNITS MAKE SURE THE LONGEST REMOTE EVAPORATOR CABLE IS ATTACHED TO THE 3RD COMPARTMENT CONNECTORS IN THE HOST EVAPORATOR.

(D) 8.2 THE EVAPORATOR FANS AND HEATERS OPERATE ON 460V (NOMINAL), 3 PHASE POWER. ALL RED INSULATED WIRES IN THE ELECTRICAL HARNESS ARE INTENDED FOR HIGH VOLTAGE.

(D) 8.3 THE 1100 EVAPORATOR USES ONLY ONE DRAIN WIRE RESISTER(DWR). ROUTE THE DRAIN WIRE TO THE APPROPRIATE SIDE OF THE EVAPORATOR AND OUT THE DRAIN TUBE. TIE THE EXCESS DRAIN WIRE EITHER TO THE SUCTION LINE ON ONE END OR THE WIRE HARNESS ON THE OPPOSITE END WITH ITEM 80 TO KEEP IT OUT OF THE FAN.

(D) 8.4 THE WIRING HARNESSES FOR THE REMOTE EVAPORATOR SHOULD BE RUN ALONG WITH THE SUCTION AND LIQUID LINE TO THE HOST UNIT.

CAUTION: WHEN ROUTING HARNESS, CLAMP THE HARNESS EVERY 2' AND AVOID CHAFING WITH TROUGH, TROUGH COVER AND EVAPORATOR FRAME. CUT HARNESS TO LENGTH AT EVAPORATOR END. DON'T KINK WIRES, DON'T FOLD HARNESS OVER INTO TROUGH AND DON'T CLAMP 12V CABLE AND 460V CABLE TOGETHER WITH THE SAME CLAMP.

NOTE: STRIP WIRE ENDS 0.25[6.4] BEFORE INSERTING INTO ELECTRICAL CONNECTOR.

CAUTION: USE EXTREME CAUTION TO AVOID CUTTING THE INSULATION ON WIRES WHEN CUTTING WIRE HARNESS SLEEVE.

(D) 8.5 USE THE RING TERMINAL SUPPLIED (ITEM 8), AND PROPER CRIMPING TOOL (CTD AMP #59824-1) FOR THE GROUND WIRE IN THE CABLE FOR EACH EVAPORATOR.

(D) 8.6 COMPLETE ALL ELECTRICAL CONNECTIONS ON THE REMOTE EVAPORATOR PER WIRING INSTRUCTIONS ON SHEET 7.

(D) 8.7 IF A REAR MOUNTED REMOTE CONTROL/INDICATOR PANEL IS USED, THE CONTROL CABLE MAY BE RUN WITH THE SUCTION, LIQUID LINE AND THE EVAPORATOR WIRE HARNESS TO THE HOST UNIT.

9.0 DRAIN TUBE CONNECTIONS:

9.1 DEFROST DRAIN TUBES PROVIDED BY THE TRAILER MANUFACTURER SHOULD BE CENTERED ON THE EVAPORATOR AND PLACED 10 TO 11 INCHES FROM THE CEILING. A 7/8"I.D./ 15/16"O.D. DRAIN TUBE IS SUPPLIED FOR CONNECTION OF THE REMOTE EVAPORTOR DRAIN OUTLET WHICH IS TO BE INSTALLED INTO THE TRAILER OEM SUPPLIED WALL DRAIN. THE DRAIN TUBE SUPPLIED BY CARRIER IS DESIGNED TO GO INSIDE THE WALL DRAIN PIPE SUPPLIED BY THE BODY BUILDER OEM. THE WALL DRAIN MUST BE CPVC SCHEDULE 40 RATED AT 200°F[93°c] OR EQUIVALENT.

9.2 THE 1100 EVAPORATOR USES ONLY ONE OF THE TWO DEFROST DRAINS. THE UNUSED DRAIN IS PLUGGED WITH PLUG PROVIDED WITH THE EVAPORATOR. USE 2 SHIMS UNDER BOLT CLOSEST TO WALL, ONE SHIM ON CENTER BOLT AND NO SHIMS ON BOLT IN CENTER OF TRAILER.

9.3 THE 2200 WIDTH EVAPORATOR USES BOTH DEFROST DRAINS.

⚠ 10.0 MICROPROCESSOR CONFIGURATION: SET MICROPROCESSOR CONFIGURATION "C2 EVAP" AND "C3 EVAP" TO THE PROPER MODELS, SEE SHEET'S 9,10 & 11.

⚠ 11.0 DURING INITIAL RUN OF THE UNIT, THE REMOTE EVAPORATOR TXV'(S) SUPERHEAT MUST BE CHECKED AND ADJUSTED AS REQUIRED. FOR COMPLETE INSTRUCTIONS ON REMOTE EVAPORATOR SUPERHEAT ADJUSTMENT. SEE SUPERHEAT ADJUSTMENT PROCEDURE ON SHEET 2.

12.0 CONSULT APPLICATION ENGINEERING FOR PROPER INSTALLATION OF FEATURES NOT SUPPLIED BY CARRIER.

13.0 FOR COPPER TROUGH INSTALLATIONS REFER TO 62-11403 IN ADDITION TO THE INFORMATION PRESENTED IN THIS DOCUMENT.

CONTENTS

CONTENTS	SHEET
GENERAL INFORMATION	1 & 2
TRAILER PREPARATION/REFRIGERANT LINE ROUTING	3,4,5 & 6
ELECTRICAL DIAGRAM	7 & 8
SYSTEM CONFIGURATION	9
EVAPORATOR INFORMATION	10,11,12 & 13

SEE SEPARATE PARTS LIST

SYM	REVISION RECORD	DATE	BY	ENGR.	M.E.	NPCA NO.
D	UPDATED SHEET INDEX. REVISED AND RENUMBERED NOTES 8.1 THRU 8.7. SEE SHEET 2.	06 NOV 2012	ZMG			72N0318P12
C	UPDATED SHT. INDEX, SEE SHT. 2.	09 JAN 2012	LT			72N0326P11
B	INITIAL RELEASE OF 98-02542-01 & -02; REVISED NOTE 10.0; SEE ALL SHEETS.	JAN-26-10	SS			72N0001P10

⚠ CRITICAL INFORMATION FOR UNIT INSTALLATION.

SHEET INDEX																
	REV	D	D	B	B	B	B	B	B	B	B	B	B	B	B	B
	SHEET	1	2	3	4	5	6	7	8	9	10	11	12	13	14	15

THIRD ANGLE PROJECTION

IMPERIAL INCH FORMAT: UNLESS OTHERWISE SPECIFIED DIMENSIONS ARE IN INCHES WITH METRIC CONVERSIONS IN [MILLIMETERS]

TITLE INSTL INSTR

DRAWING NO. 98-02542 SHEET 1 OF 15

REV D

SUPERSEDES

PRINT DISTRIBUTION

SUPERHEAT ADJUSTMENT PROCEDURE

REMOTE EVAPORATOR SUPERHEAT SETTING IS CRITICAL TO PROPER UNIT OPERATION AND RELIABILITY. IN ORDER TO HAVE OPTIMUM PERFORMANCE FROM BOTH THE REMOTE EVAPORATOR AND THE HOST UNIT, THE SUPERHEAT MUST BE PROPERLY SET. FOLLOW THESE SIMPLE STEPS TO SET AND ADJUST REMOTE EVAPORATOR SUPERHEAT:

1. PLACE A THERMOCOUPLE AS CLOSE AS ONE CAN GET TO THE TXV SENSING BULB, LOCATED ON THE SUCTION LINE. TO DO THAT, ONE HAS TO OPEN THE PRESTITE TAPE AROUND THE TXV SENSING BULB AREA. IN ORDER TO HAVE ACCURATE READING FROM THE THERMOCOUPLE, IT SHOULD BE INSTALLED ON THE COPPER TUBING NEXT TO THE SENSING BULB, AND IT SHOULD BE POSITIONED AT 5 OR 7 O'CLOCK. ALSO, IT SHOULD BE SECURED WITH A PIECE OF ELECTRICAL TAPE ABOUT THE SIZE OF 1/2 IN SQUARE. THE PRESTITE TAPE INSULATION MUST BE PLACED BACK ON AND SECURED WITH A STRAP CLAMP. CLOSE THE FAN GRILLE.

IMPORTANT: ON EVAPORATORS WITH 2 TXV'S, THERMOCOUPLE IS ONLY REQUIRED ON 1 TXV.

2. CONNECT A SUCTION PRESSURE GAUGE TO THE FLARE FITTING WITH SCHRADER VALVE.

3. THERE IS AN EXTERNAL ADJUSTMENT SCREW ON THE SIDE OF THE TXV. FIRST, TURN CLOCKWISE TO FULLY CLOSE TXV. THEN, STARTING FROM THE FULLY CLOSED POSITION, TURN COUNTER CLOCKWISE AND STOP AFTER 3 COMPLETE TURNS (1 COMPLETE TURN EQUALS 360°).

IMPORTANT: ON EVAPORATORS WITH 2 TXV'S, DO SAME ADJUSTMENT ON BOTH TXV'S.

© 4. SET THE HOST UNIT TO -20°F SETPOINT SO THE HOST UNIT STAYS IN SIX CYLINDER HIGH SPEED COOLING. ALSO, THE MIN. OFF TIME AND OVERRIDE. TEMPERATURE FUNCTIONAL PARAMETERS CAN BE SET TO THEIR LARGEST VALUES TO KEEP C1 HEATING TO A MINIMUM. SET REMOTE EVAPORATOR COMPARTMENT AT 0°F TO KEEP HOST UNIT OPERATING IN HIGH SPEED. MAINTAIN THE EVAPORATOR COMPARTMENT TEMPERATURE AS CLOSELY AS POSSIBLE TO 35°F. TO ACHIEVE THIS, ONE CAN ARRANGE THE BULKHEAD AND OPEN THE TRAILER DOOR SLIGHTLY IF IT IS NEEDED, UNTIL TEMPERATURE IS STABLE. REMEMBER, OPENING THE TRAILER DOOR FOR AN EXTENDED PERIOD OF TIME WILL ALLOW MOISTURE INSIDE THE TRAILER AND FROST THE EVAPORATOR COIL, WHICH WILL MAKE THE SUPERHEAT UNSTABLE.

5. TAKE AT LEAST 10 READINGS OF THERMOCOUPLE DURING A 15 MINUTE PERIOD WHEN THE REMOTE EVAPORATOR COMPARTMENT TEMPERATURE IS AROUND 35°F. IT IS NORMAL TO SEE THE THERMOCOUPLE READING VARY. IT COULD BE DUE TO THE COMPARTMENT TEMPERATURE NOT CONTROLLED CONSISTENTLY AT 35°F. USE THE AVERAGE OF 10 READINGS AS THE TXV BULB TEMPERATURE. READ SUCTION PRESSURE FROM THE PRESSURE GAUGE.

6. USING A PRESSURE-TEMPERATURE (P/T) CHART FOR R404A REFRIGERANT, CONVERT THE SUCTION PRESSURE TO TEMPERATURE. THE AVERAGE BULB TEMPERATURE MINUS THE SUCTION TEMPERATURE EQUALS THE OPERATING SUPERHEAT.

7. THE ABOVE INSTRUCTED PROCEDURE SHOULD PRODUCE ABOUT 15-17°F OF SUPERHEAT. IF NOT, ONE NEEDS TO ADJUST THE TXV.

8. ONE COMPLETE TURN OF 360° WILL GENERATE APPROXIMATELY 7°F OF SUPERHEAT. TO DECREASE SUPERHEAT, TURN THE SCREW COUNTER-CLOCKWISE; TO INCREASE SUPERHEAT, TURN IT CLOCKWISE. AFTER ADJUSTMENT IS COMPLETED, PLEASE REPEAT STEP #5.

IMPORTANT: ON EVAPORATORS WITH 2 TXV'S. IF ADJUSTMENT IS MADE ON THE TXV WITH THERMOCOUPLE, MAKE SAME ADJUSTMENT ON THE OTHER TXV.

9. READ COMPRESSOR SUCTION TEMPERATURE AND PRESSURE FROM THE MICROPROCESSOR. CONVERT THE SUCTION PRESSURE TO TEMPERATURE USING THE R404A P/T CHART. SUCTION TEMPERATURE MINUS THE CONVERTED TEMPERATURE EQUALS SUCTION SUPERHEAT. AS AN ADDITIONAL VERIFICATION, SUCTION SUPERHEAT SHOULD BE BETWEEN 70-90°F.

©

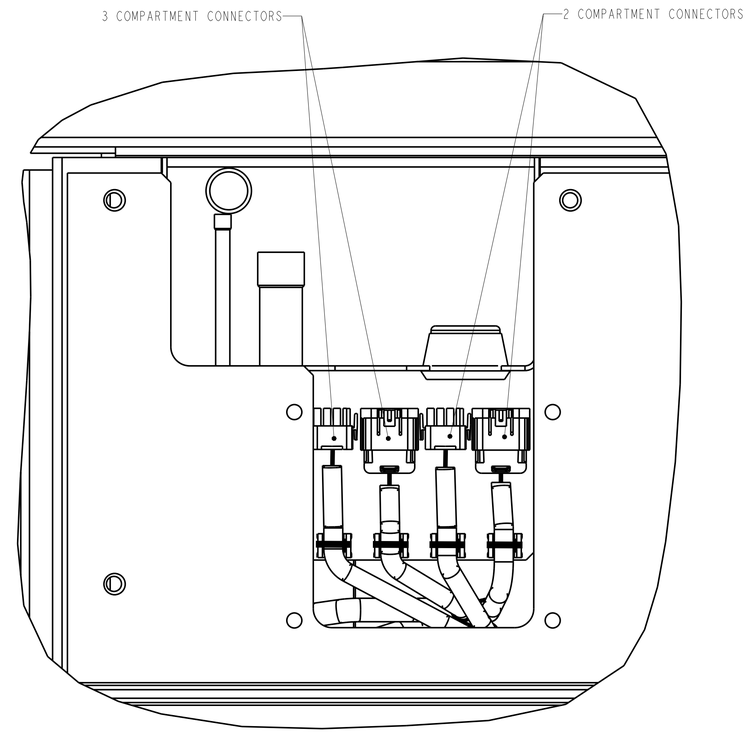

REMOTE EVAP HOST ELECTRICAL CONNECTIONS
(ACCESS PANEL REMOVED TO SHOW CONNECTORS)

SYM	REVISION RECORD	DATE	BY	ENGR.	M.E.	NPCA NO.
D	ADDED REMOTE EVAP HOST ELECTRICAL CONNECTIONS DETAIL.	06 NOV 2012	ZMG			72N0318P12
C	REVISED SPEC. 4. REMOVED SPEC. 10,11 & 12.	09 JAN 2012	LT			72N0326P11
B	ADDED 3 COMPARTMENT M/T TO DRAWING	JAN-26-10	SS			72N0001P10
A	INITIAL RELEASE	APR-15-09	SS			72N020GP09

THIRD ANGLE PROJECTION

IMPERIAL INCH FORMAT:
UNLESS OTHERWISE SPECIFIED
DIMENSIONS ARE IN INCHES WITH
METRIC CONVERSIONS IN [MILLIMETERS]

TITLE
INSTALLATION INSTRUCTIONS
VECTOR 6600 MT (2 & 3 COMPARTMENT) REMOTE EVAPORATORS

DRAWING NO. 98-02542
SHEET 2 OF

REV D

SUPERSEDES

PRINT DISTRIBUTION

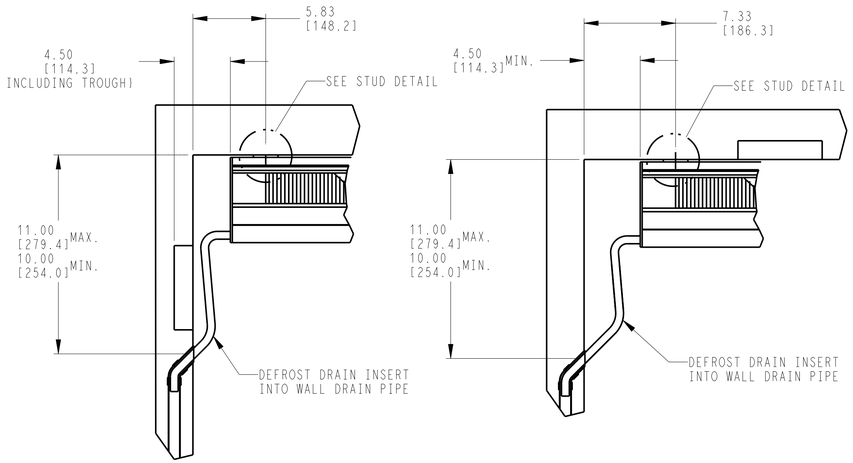

WALL TROUGH

CEILING TROUGH

DUAL DISCHARGE ROAD SIDE

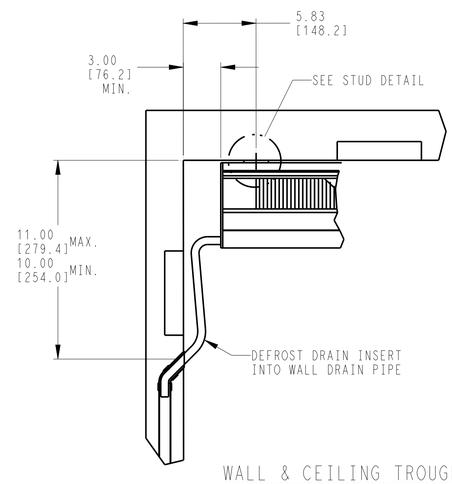

WALL & CEILING TROUGH

SINGLE DISCHARGE ROAD SIDE

INSTALLATION TIPS

1. USE FLAT FLOORING IN THE FLOOR SECTION UNDER THE BULKHEAD.
2. PROVIDE A THERMAL BREAK IN THE FLOOR UNDER THE BULKHEAD. FOR MOVABLE LOCATION BULKHEADS, USE RUBBERIZED HARDWOOD FLOORS.
3. COVER REFRIGERANT LINES TO AVOID IMPACT DAMAGE.
4. INSTALL A GUARD AROUND THE EVAPORATOR TO PREVENT IMPACT DAMAGE.

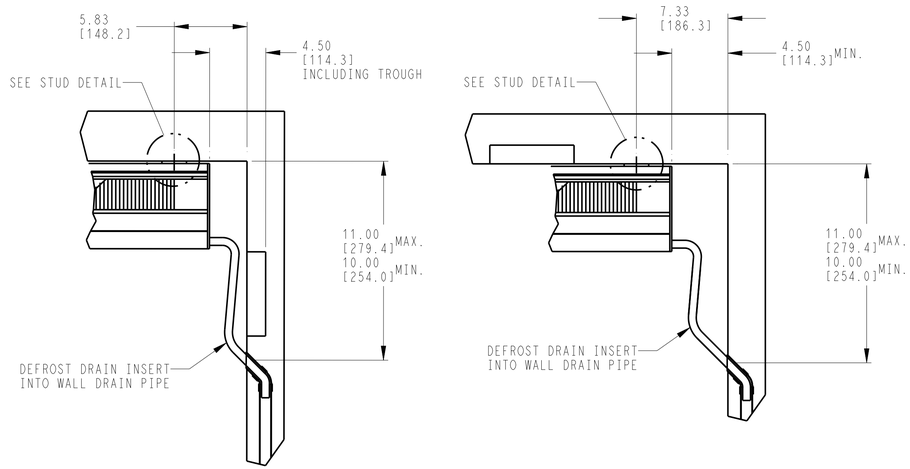

WALL TROUGH

CEILING TROUGH

DUAL DISCHARGE CURB SIDE

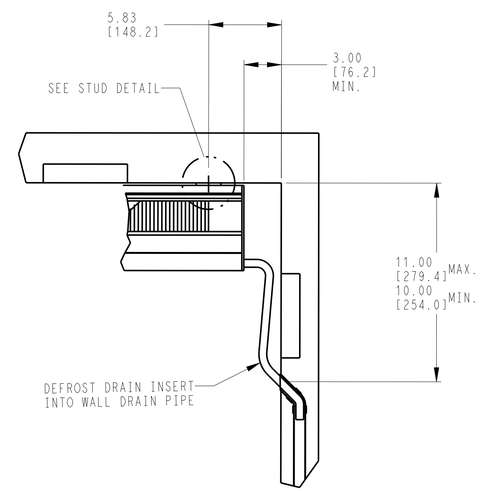

WALL & CEILING TROUGH

SINGLE DISCHARGE CURB SIDE

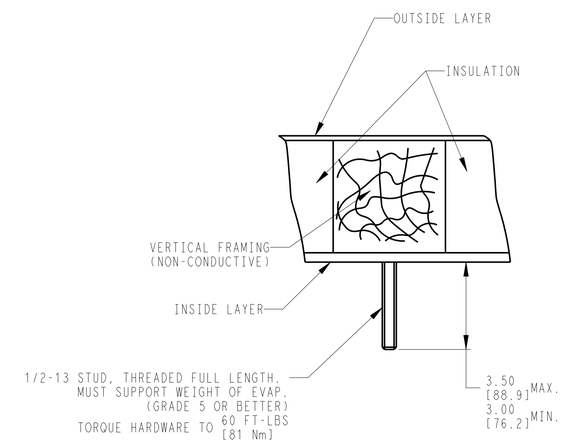

STUD DETAIL

TRAILER PREPARATION FOR EVAPORATOR

SYM	REVISION RECORD	DATE	BY	ENGR.	M.E.	NPCA NO.
B	ADDED 3 COMPARTMENT M/T TO DRAWING	JAN-26-10	SS			72N0001P10
A	INITIAL RELEASE	APR-15-09	SS			72N020GP09

THIRD ANGLE PROJECTION

IMPERIAL INCH FORMAT:
UNLESS OTHERWISE SPECIFIED
DIMENSIONS ARE IN INCHES WITH
METRIC CONVERSIONS IN [MILLIMETERS]

TITLE
INSTALLATION INSTRUCTIONS
VECTOR 6600 MT (2 & 3 COMPARTMENT) REMOTE EVAPORATORS

DRAWING NO. 98-02542
SHEET 3 OF

REV. B

SUPERSEDES

PRINT DISTRIBUTION

TUBING INSTRUCTIONS

CAUTION: HOST UNIT IS SHIPPED FULLY CHARGED FROM FACTORY. SEE NOTE #7 ON SHEET #1 FOR PROCEDURE TO REMOVE CAPPED TUBES FROM HOST UNIT.

1. BELLS ON TUBES FROM HOST ARE MEANT TO ACCEPT 3/8" AND 1 1/8" REFRIGERATION TUBING.
2. MAKE TUBING CONNECTIONS USING ITEMS 40,45,50,55 & 60.
3. ROUTE TUBING TO REAR EVAPORATORS TO MINIMIZE EXPOSURE TO DAMAGE.
4. FOR COPPER TO COPPER BRAZING IT IS REQUIRED THAT A BRAZING MATERIAL OF 15% SILVER, 5% PHOSPHOROUS IS USED (FLUX IS NOT REQUIRED FOR COPPER TO COPPER JOINTS). SOFT SOLDER BRAZING MATERIAL IS NOT RECOMMENDED.
5. CLOSED CELL FOAM INSULATION IS PROVIDED TO COVER THE ENTIRE SUCTION LINE LENGTH.
6. IF A CEILING TROUGH IS INSTALLED FOR A MHD EVAP, THE TROUGH SHOULD ANGLE TO THE SIDE WALL AT THE CENTER OF THE EVAP.
7. IT IS RECOMMENDED TO REMOVE ACCESS PANEL FROM BACK PANEL AND MOVE ELECTRICAL CABLE AWAY FROM TUBING BEFORE BRAZING REFRIGERANT TUBING AT HOST UNIT.

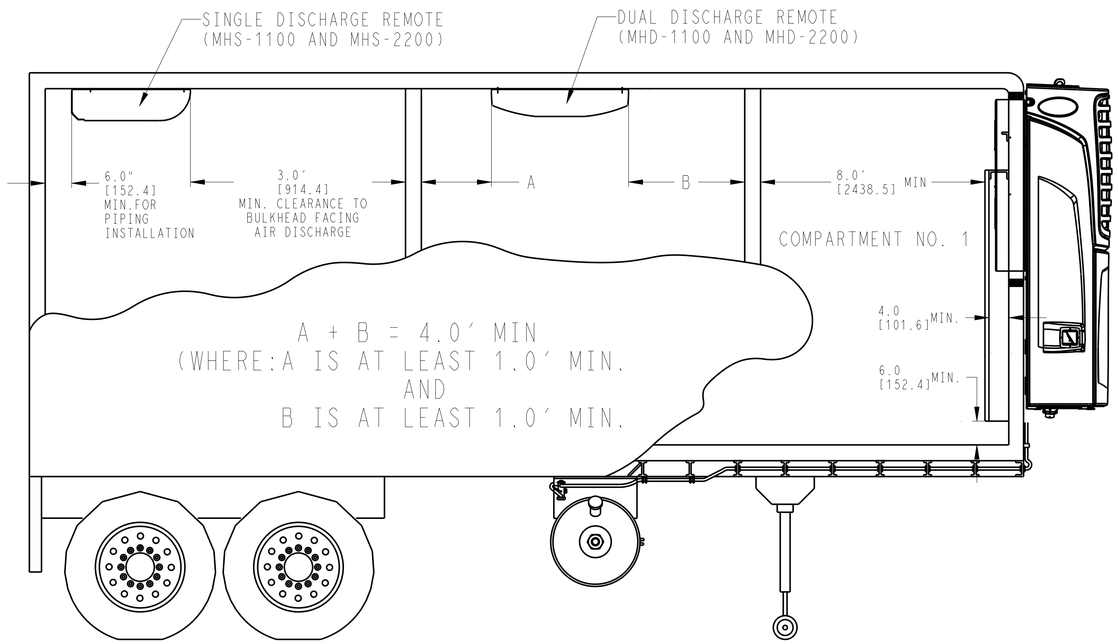

SINGLE AND DUAL DISCHARGE REMOTE EVAP INSTALLATION
(2 REMOTE COMPARTMENTS SHOWN FOR ILLUSTRATION ONLY)

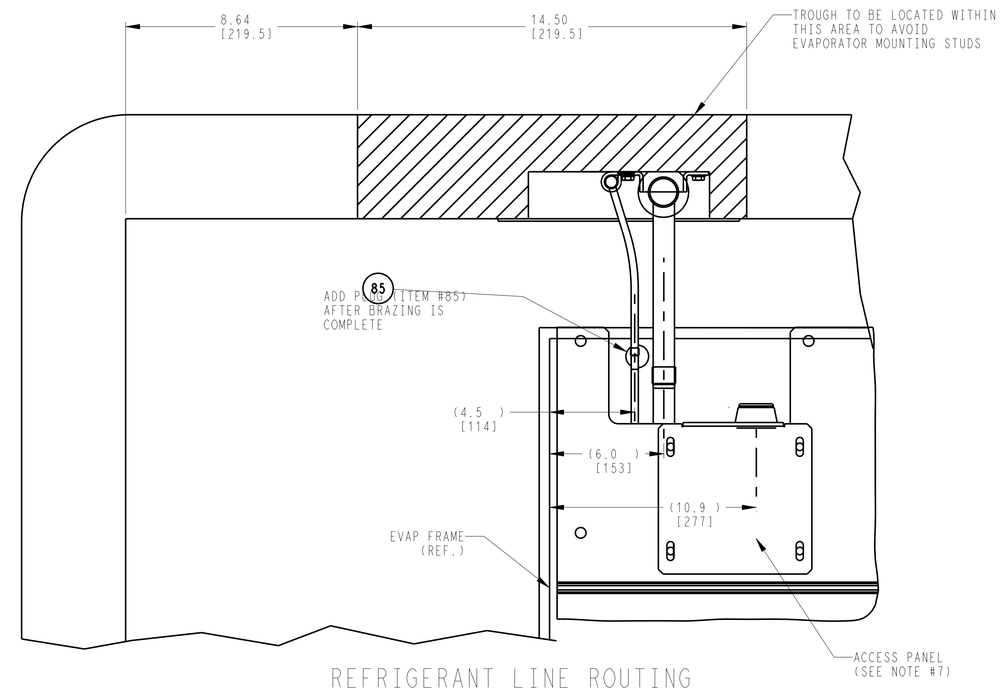

REFRIGERANT LINE ROUTING
CEILING TROUGH CONFIGURATION
(WIRING NOT SHOWN FOR CLARITY)

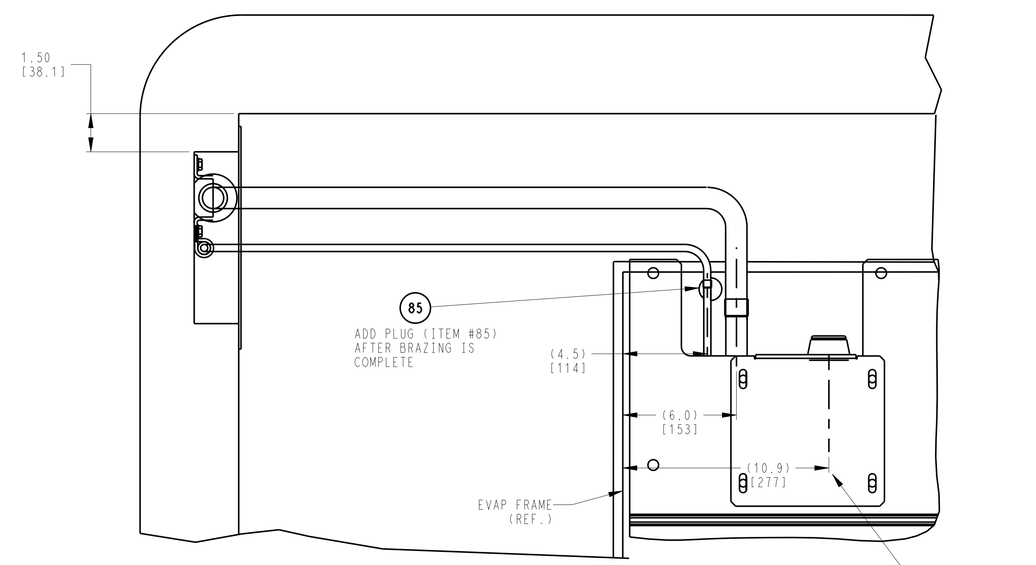

REFRIGERANT LINE ROUTING
WALL TROUGH CONFIGURATION
(WIRING NOT SHOWN FOR CLARITY)

SYM	REVISION RECORD	DATE	BY	ENGR.	M.E.	NPCA NO.
B		JAN-26-10	SS			72N0001P10
A	INITIAL RELEASE	APR-15-09	SS			72N020GP09

THIRD ANGLE PROJECTION

IMPERIAL INCH FORMAT:
UNLESS OTHERWISE SPECIFIED
DIMENSIONS ARE IN INCHES WITH
METRIC CONVERSIONS IN [MILLIMETERS]

TITLE
INSTALLATION INSTRUCTIONS
VECTOR 6600 MT (2 & 3 COMPARTMENT) REMOTE EVAPORATORS

DRAWING NO. 98-02542
SHEET 4 OF
REV B

SUPERSEDES

PRINT DISTRIBUTION

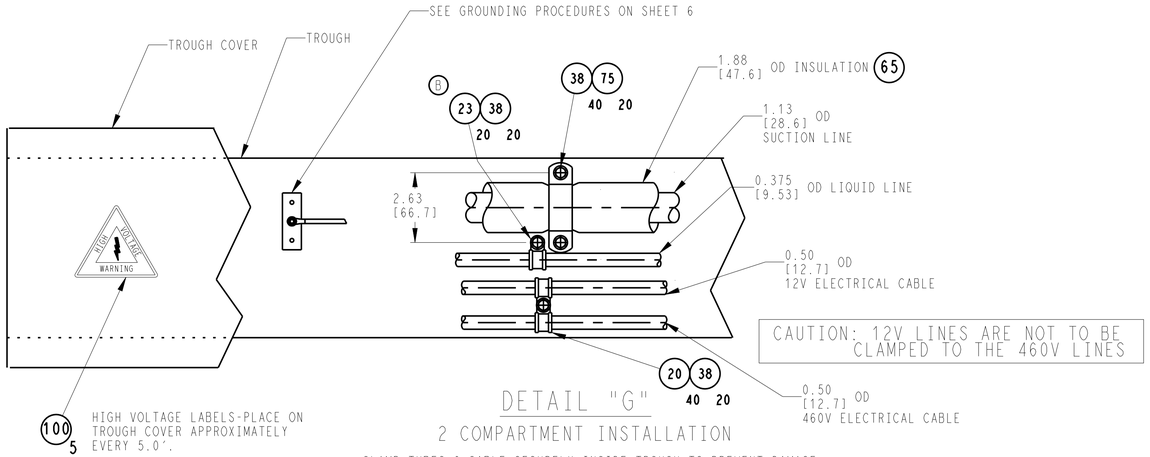

DETAIL "G"

2 COMPARTMENT INSTALLATION

CLAMP TUBES & CABLE SECURELY INSIDE TROUGH TO PREVENT DAMAGE FROM VIBRATION. SPACING BETWEEN CLAMPS NOT TO EXCEED 24".
(SEE SHEET 6 FOR CLAMPING REQUIRED FOR COPPER TROUGH INSTALLATIONS)

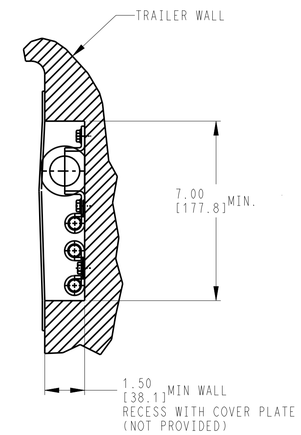

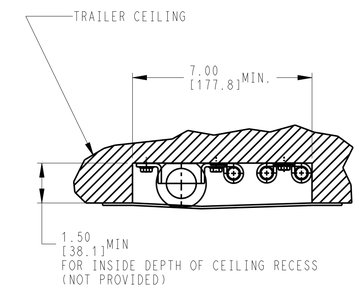

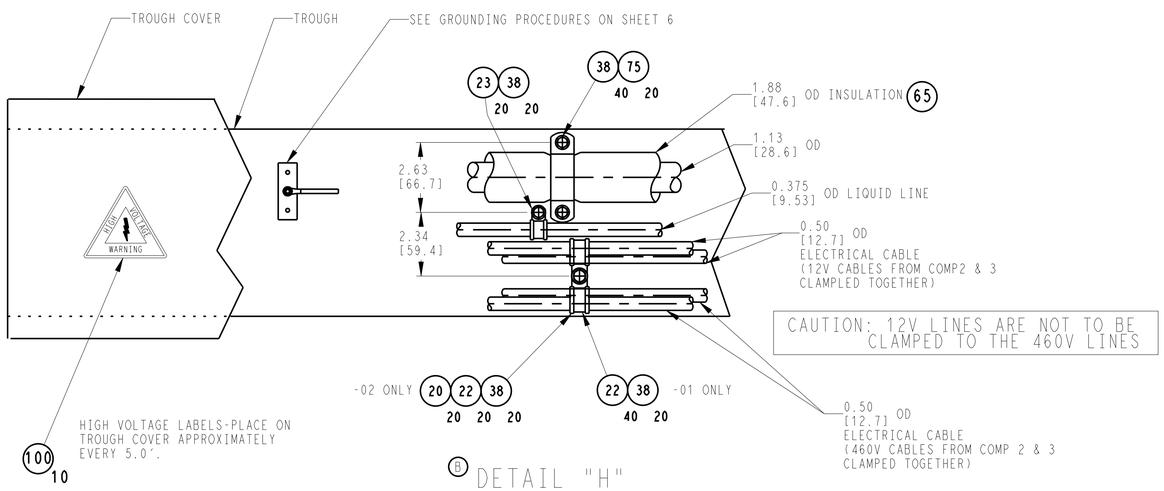

B DETAIL "H"

3 COMPARTMENT INSTALLATION

CLAMP TUBES & CABLE SECURELY INSIDE TROUGH TO PREVENT DAMAGE FROM VIBRATION. SPACING BETWEEN CLAMPS NOT TO EXCEED 24".
(SEE SHEET 6 FOR CLAMPING REQUIRED BY UTILITY TRAILER ENGINEERING)

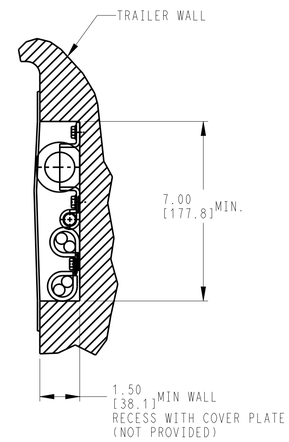

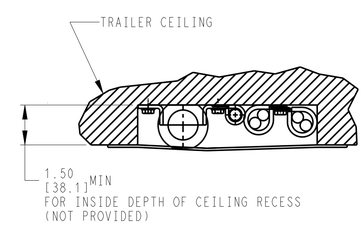

SYM	REVISION RECORD	DATE	BY	ENGR.	M.E.	NPCA NO.
B	IN DETAIL G: ITEM #23 QTY 20 WAS ITEM #20 QTY 20; ADDED 3 DETAIL H FOR 3 COMPARTMENT INSTALLATION	JAN-26-10	SS			72N0001P10
A	INITIAL RELEASE	APR-15-09	SS			72N020GP09

THIRD ANGLE PROJECTION

IMPERIAL INCH FORMAT: UNLESS OTHERWISE SPECIFIED DIMENSIONS ARE IN INCHES WITH METRIC CONVERSIONS IN [MILLIMETERS]

TITLE INSTALLATION INSTRUCTIONS
VECTOR 6600 MT (2 & 3 COMPARTMENT) REMOTE EVAPORATORS

DRAWING NO. 98-02542 SHEET 5 OF

REV B

SUPERSEDES

PRINT DISTRIBUTION

Carrier
A United Technologies Company
Carrier Transicold Division
Carrier Corporation
P.O. Box 4805
Syracuse, New York 13221

RECOMMENDED GROUNDING PROCEDURE
(FOR ALUMINUM TROUGHS WITHOUT EXISTING GROUND HARDWARE)

TO GROUND THE HOST UNIT

1. LOCATE THE 8 GA. GREEN GROUND WIRE FROM THE HOST UNIT AND ROUTE TO TROUGH. ATTACH GROUND PLATE (ITEM 115) TO TROUGH USING METHOD DESCRIBED IN NOTES 3 & 4.
2. IF NECESSARY, CUT WIRE TO LENGTH AND TERMINATE WITH M6 RING TERMINAL (ITEM 15) AND HEAT SHRINK TUBING (ITEM 90). USE THE PROPER CRIMPING TOOL (GREENLEE K05-1GL). ATTACH WIRE TO PLATE ASSY USING THE HARDWARE FROM PLATE ASSY.
3. SECURE WIRE TO THE HIGH VOLTAGE LINES USING WIRE TIES (ITEM 80).

IMPORTANT

MAKE SURE ALL WIRES ARE PROPERLY SECURED AWAY FROM ANY SURFACES OR EDGES THAT CAN RESULT IN CHAFING.

2 COMPARTMENT SHOWN
(REFRIGERANT LINES NOT SHOWN)

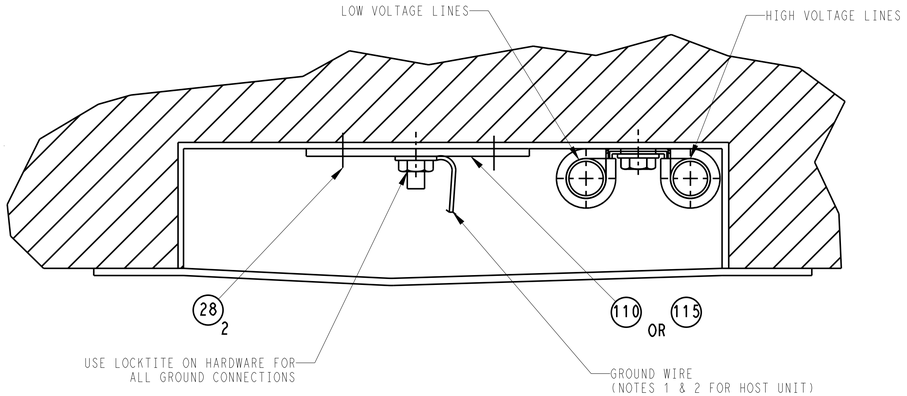

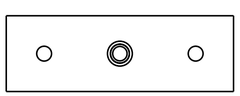

GROUND PLATE ITEM 115
FOR HOST UNIT GROUNDING

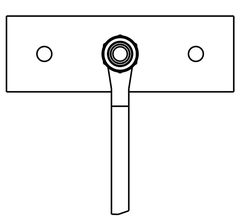

GROUND PLATE W/WIRE ITEM 110
FOR REMOTE EVAPORATOR GROUNDING
AND GROUNDING OF GUARDS

ALTERNATE GROUNDING PROCEDURE
(FOR ALUMINUM TROUGHS WITH EXISTING GROUND HARDWARE)
& COPPER INSERT

TO GROUND THE HOST UNIT

1. LOCATE AND ROUTE THE 8 GA. GREEN GROUND WIRE FROM THE HOST UNIT TO THE TROUGH.
2. IF NECESSARY, CUT WIRE TO LENGTH AND TERMINATE USING M6 RING TERMINAL (ITEM 15) AND HEAT SHRINK TUBING (ITEM 90). USE THE PROPER CRIMPING TOOL (GREENLEE K05-1GL). ATTACH WIRE TO TROUGH USING THE HARDWARE PROVIDED IN THE TROUGH AS SHOWN BELOW.
3. SECURE WIRE TO THE HIGH VOLTAGE LINES USING WIRE TIES (ITEM 80).

TO GROUND THE REMOTE EVAPORATOR

4. ATTACH 8 GA. GREEN GROUND WIRE (ITEM 10) TO GROUND STUD INSIDE THE REMOTE USING THE STAINLESS STEEL NUTS ON THE UNUSED STUD IN THE REMOTE. ROUTE THE WIRE TO THE TROUGH. ATTACH WIRE TO TROUGH USING HARDWARE SUPPLIED IN TROUGH AS SHOWN BELOW.

TO GROUND GUARDS

5. GUARDS ARE RECOMMENDED TO PROTECT WIRES AND PIPING FROM REMOTE EVAPORATORS TO TROUGH.
6. DRILL (2) 0.196 [4.98] DIA HOLES IN EACH GUARD USING GROUND PLATE (ITEM 110) AS A TEMPLATE.
7. ATTACH GROUND PLATE (ITEM 110) TO EACH GUARD USING (2) ALUM. RIVETS (ITEM 28) PER PLATE.
8. FOR THE REMOTE EVAPORATOR GUARDS ROUTE THE GROUND WIRE INTO THE REMOTE EVAPORATOR AND ATTACH TO GROUND STUD AS IN NOTE 4.
9. FOR THE HOST UNIT GUARD ROUTE THE GROUND WIRE TO THE TROUGH AND ATTACH TO GROUND STUD AS IN NOTE 2.

IMPORTANT

MAKE SURE ALL WIRES ARE PROPERLY SECURED AWAY FROM ANY SURFACES OR EDGES THAT CAN RESULT IN CHAFING.

CLAMPING
CLAMP SPACING NOT TO EXCEED 12" BETWEEN CLAMPS

2 COMPARTMENT SHOWN
(REFRIGERANT LINES NOT SHOWN)

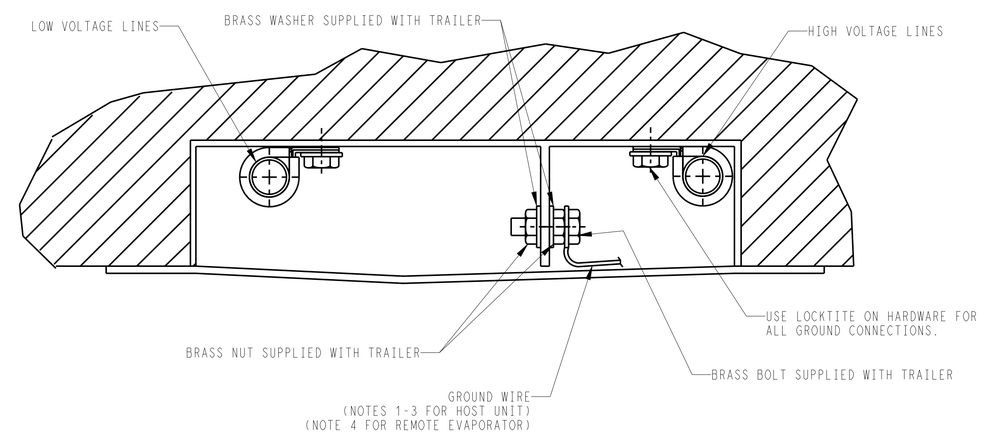

IMPORTANT NOTES

1. DO NOT USE SELF-TAPPING SCREW FOR GROUND CONNECTION TO TROUGH DUE TO CORROSION RISK.
2. IF TROUGH COVER IS ALUMINUM, TROUGH COVER MUST BE BONDED TO TROUGH.
3. IF TROUGH IS NOT ALUMINUM & COVER IS ALUMINUM, SECURE GROUND PLATE ASSY ON INSIDE OF THE COVER USING RECOMMENDED GROUNDING PROCEDURE.
4. CONTACT APPLICATION OR SERVICE ENGINEERING WITH ANY QUESTIONS.
5. COMPLETE CONTINUITY AND DIELECTRIC TESTS PER THE PRE-DELIVERY INSPECTION (PDI) SHEET.

SYM	REVISION RECORD	DATE	BY	ENGR.	M.E.	NPCA NO.
B	ADDED 3 COMPARTMENT M/T TO DRAWING	JAN-26-10	SS			72N0001P10
A	INITIAL RELEASE	APR-15-09	SS			72N020GP09

THIRD ANGLE PROJECTION

IMPERIAL INCH FORMAT:
UNLESS OTHERWISE SPECIFIED
DIMENSIONS ARE IN INCHES WITH
METRIC CONVERSIONS IN [MILLIMETERS]

TITLE
INSTALLATION INSTRUCTIONS
VECTOR 6600 MT (2 & 3 COMPARTMENT) REMOTE EVAPORATORS

DRAWING NO. 98-02542
SHEET 6 OF
REV B

SUPERSEDES

PRINT DISTRIBUTION

COLOR & MARKING	GAGE/MM^2
BLUE "1"	16/1
WHITE "1"	12/3
PURPLE "1"	16/1
WHITE "2"	12/3
GREEN "1"	12/3
PINK "1"	16/1
GREY "1"	12/1
BROWN "1"	22/0.35
BROWN "2"	22/0.35
YELLOW "1"	22/0.35
YELLOW "2"	22/0.35
GREY "1"	16/1

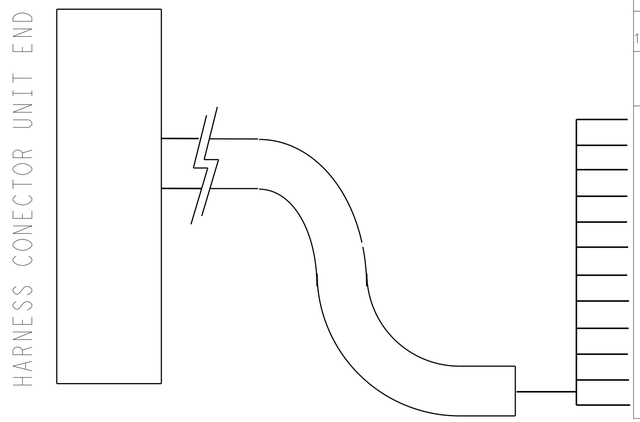

HARNESS CONNECTOR REMOTE END	REMOTE EVAPORATOR CONNECTOR			
C1 12 WAY CONNECTOR/BLACK	C1 12 WAY CONNECTOR/BLACK			
COLOR & ADDRESS	COLOR & GAGE	ADDRESS MHS OR MHD 1100/2200)	CAVITY	FUNCTION
GRAY 1	WHITE 1	C1-1/C1-2	1	DS
GRAY 2	WHITE 1	C1-1/C1-2	2	DS
WHITE 1	WHITE 1	SP10/C1-3	3	ON 12
GREEN	WHITE 1	SP5/C1-4	4	GROUND
WHITE 2	WHITE 1	SP4/C1-5	5	CDWR
BLUE 1	WHITE 1	LSV-B/C1-6	6	LSV-B
PINK 1	WHITE 1	C6-4/C1-7	7	IPEVM
PURPLE	WHITE 1	HT-B/C1-8	8	EVHTS
YELLOW 1	WHITE 0.8	C1-9/DTT-A	9	DTT
YELLOW 2	WHITE 0.8	C1-10/DTT-B	10	DTT
BROWN 1	WHITE 0.8	C1-11/RAT-A	11	RAT
BROWN 2	WHITE 0.8	C1-12/RAT-B	12	RAT

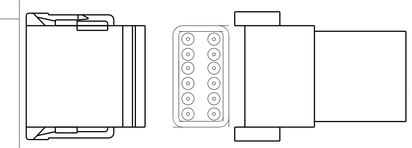

NOTES:

1.0 REMOVE THE PLATE SIDE WHERE THE REFRIGERANT CIRCUIT IS, TAKE THE PLASTIC BAG WHICH IS FIXED WITH THE HARNESS EVAPORATOR.

2.0 CUT THE HARNESS TO LENGTH CRIMP THE APPROPRIATE TERMINALS AND CONNECT THE DEUTSCH CONNECTOR, BLACK FOR LOW VOLTAGE CONNECTOR C1 USING DEUTSCH TOOL # 07-00397-02

3.0 CUT OFF THE HIGH VOLTAGE C2 & C3 CONNECTORS (ON THE REMOTE EVAP. SIDE) AND WIRE ACCORDING TO THE CHART

4.0 USE THE BUTT SPLICES (CTD P/N 22-01292-02) & HEAT SHRINK TUBING (CTD P/N 22-60309-05) PROVIDED IN A PLASTIC BAG ATTACHED TO THE HARNESS IN THE REMOTE EVAP.

4.1 USE THE PROPER CRIMPING TOOL CTD P/N 07-00496-00.

MUST USE HEAT SHRINK WITH EPOXY MELT LINER

5.0

IMPORTANT:

FOR MHS1100 & 2200 REMOTE EVAPS, WIRES RED 4, RED 5, AND RED 6 (SEE CHART) FROM HOST UNIT ARE NOT CONNECTED TO ANY WIRES IN THE REMOTE EVAP, BUT MUST BE SEALED OFF USING HEAT SHRINK TUBING PROVIDED WITH REMOTE EVAPS. USE A PAIR OF NEEDLE NOSE PLIERS TO PINCH OFF END OF TUBING WHILE STILL WARM.

6.0 CHECK THAT THE FANS, WHEN OPERATING DO NOT INTERFERE WITH THE INLET RING FANS.

7.0 DURING TEST MAKE SURE FANS ARE OPERATING IN THE CLOCKWISE DIRECTION.

8.0 CONNECTOR AND SPLICES MUST BE PLACED INSIDE REMOTE EVAP AND FASTENED AS HIGH IN EVAP AS POSSIBLE TO AVOID WATER ACCUMULATION.

9.0 DO NOT BEND PVC SLEEVING, AS TO AVOID OPENING THE CONNECTOR SEALS AND LOSE WATER PROOF SEAL.

COLOR & MARKING	GAGE/MM^2
RED "4"	16-14/1.5
RED "5"	16-14/1.5
RED "6"	16-14/1.5
RED "7"	16-14/1.5
RED "8"	16-14/1.5
RED "9"	16-14/1.5
RED "1"	16-14/1.5
RED "2"	16-14/1.5
RED "3"	16-14/1.5

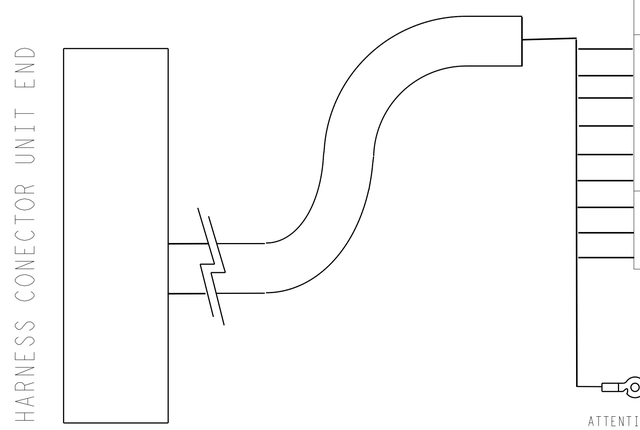

BUTT SPLICE AND HEAT SHRINK				
MHS OR MHD 1100/2200				
HOST END	REMOTE END			
COLOR & ADDRESS	COLOR	GAGE	ADDRESS	FUNCTION
RED 1	RED	1.5	HTR1-A	HEATER
RED 2	RED	1.5	HTR1-B	HEATER
RED 3	RED	1.5	HTR1-C	HEATER
RED 4	RED	1.5	HTR2-A	HEATER
RED 5	RED	1.5	HTR2-B	HEATER
RED 6	RED	1.5	HTR2-C	HEATER
RED 7	RED	1.5	C3-1/SP1	FAN
RED 8	RED	1.5	C3-2/SP3	FAN
RED 9	RED	1.5	C3-3/SP2	FAN

SEALED OFF FOR MHS SEE NOTE 5.0

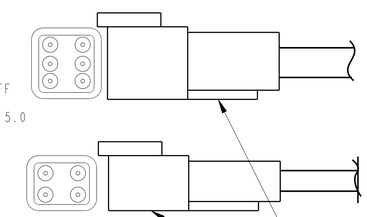

CUT OFF/REMOVE (SEE NOTE 3.0 & 4.0)

5 8 35

GREEN/YELLOW

ATTENTION: GROUND WIRE SHOULD BE LONG ENOUGH TO ATTACH TO GROUND STUD ON THE INSIDE OF THE SIDE PLATE OF EVAPORATOR.

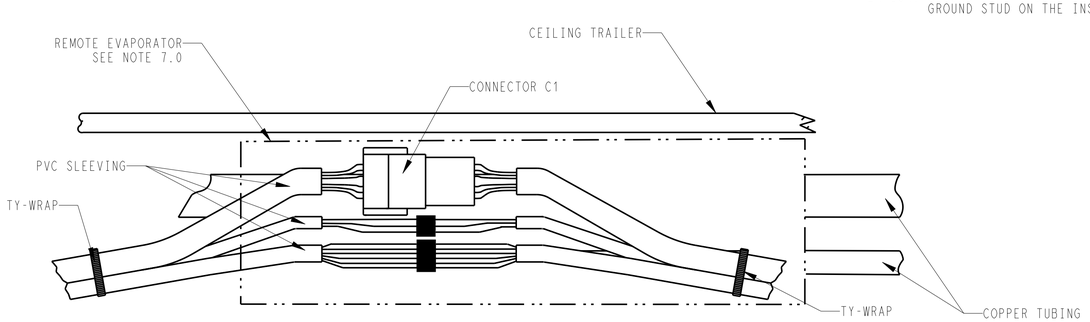

MULTI-TEMP HARNESS WIRE DIAGRAM FOR MHS AND MHD 1100/2200

SYM	REVISION RECORD	DATE	BY	ENGR.	M.E.	NPCA NO.
B	ADDED 3 COMPARTMENT M/T TO DRAWING	JAN-26-10	SS			72N0001P10
A	INITIAL RELEASE	APR-15-09	SS			72N020GP09

THIRD ANGLE PROJECTION

IMPERIAL INCH FORMAT: UNLESS OTHERWISE SPECIFIED DIMENSIONS ARE IN INCHES WITH METRIC CONVERSIONS IN (MILLIMETERS)

TITLE INSTALLATION INSTRUCTIONS
VECTOR 6600 MT (2 & 3 COMPARTMENT) REMOTE EVAPORATORS

DRAWING NO. 98-02542 SHEET 7 OF

REV B

SUPERSEDES

PRINT DISTRIBUTION

CONNECTOR - C1	
CONNECTOR PIN NO.	TERMINAL
1	C1-1/C1-2
2	C1-1/C1-2
3	SP10/C1-3
4	SP5/C1-4
5	SP4/C1-5
6	LSV-B/C1-6
7	C6-4/C1-7
8	HT-B/C1-8
9	C1-9/DTT-A
10	C1-10/DTT-B
11	C1-11/RAT-A
12	C1-12/RAT-B

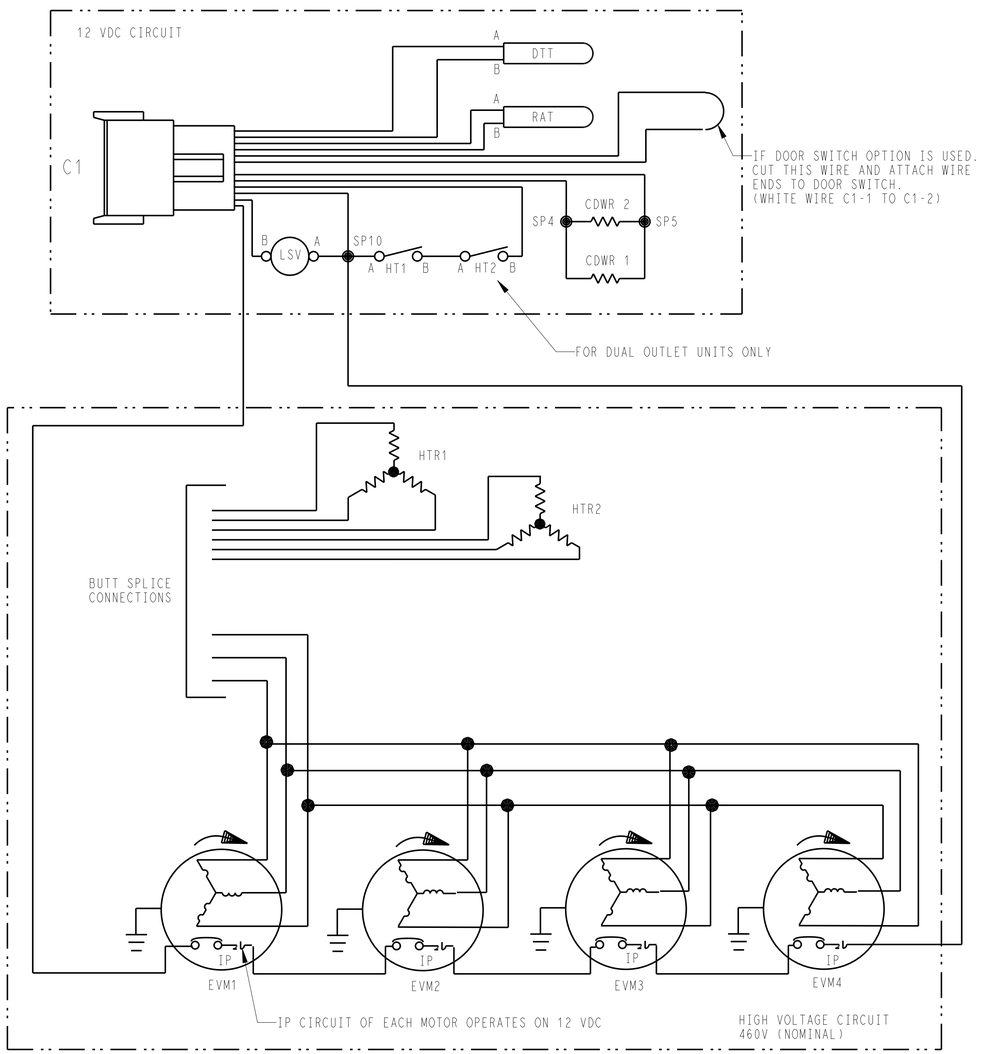

DIAGRAM FOR MHS/MHD/-2200-4 EVAPORATOR ONLY

SHOWN WITH HIGH VOLTAGE CONNECTORS REMOVED

CONNECTOR - C1	
CONNECTOR PIN NO.	TERMINAL
1	C1-1/C1-2
2	C1-1/C1-2
3	SP10/C1-3
4	SP5/C1-4
5	SP4/C1-5
6	LSV-B/C1-6
7	C6-4/C1-7
8	HT-B/C1-8
9	C1-9/DTT-A
10	C1-10/DTT-B
11	C1-11/RAT-A
12	C1-12/RAT-B

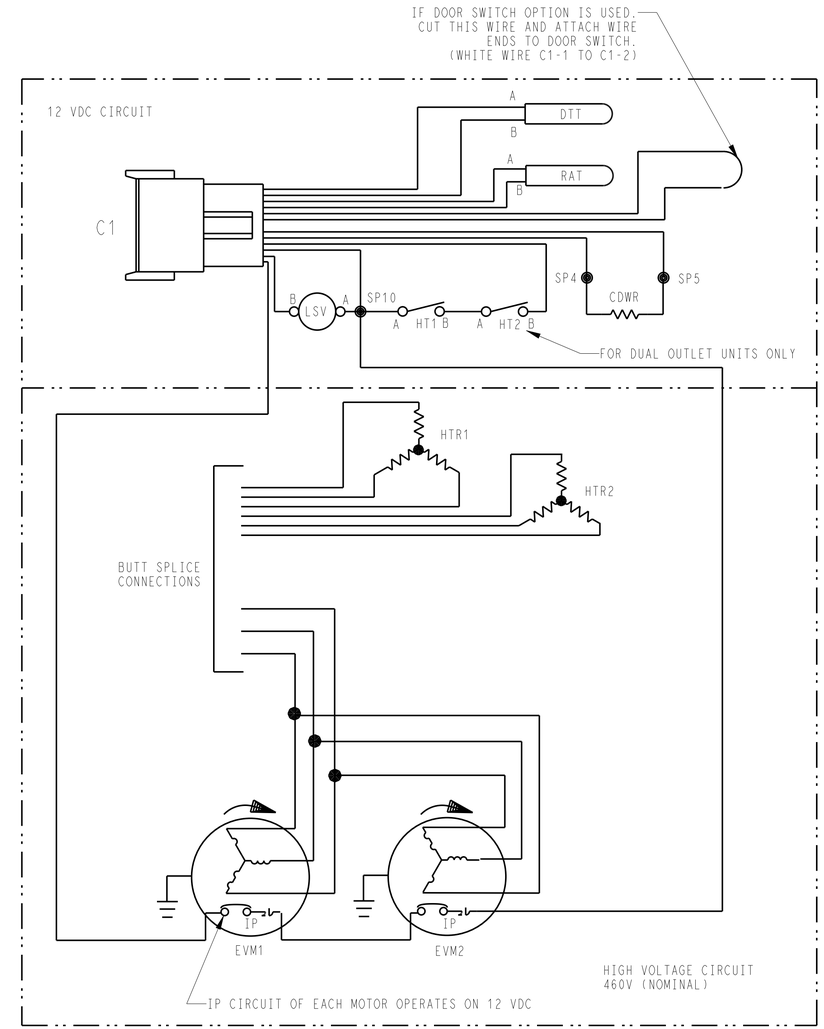

DIAGRAM FOR MHS/MHD-1100-2 EVAPORATOR ONLY

SHOWN WITH HIGH VOLTAGE CONNECTORS REMOVED

SYM	REVISION RECORD	DATE	BY	ENGR.	M.E.	NPCA NO.
B	ADDED 3 COMPARTMENT M/T TO DRAWING	JAN-26-10	SS			72N0001P10
A	INITIAL RELEASE	APR-15-09	SS			72N020GP09

THIRD ANGLE PROJECTION

IMPERIAL INCH FORMAT:
UNLESS OTHERWISE SPECIFIED
DIMENSIONS ARE IN INCHES WITH
METRIC CONVERSIONS IN [MILLIMETERS]

TITLE
INSTALLATION INSTRUCTIONS
VECTOR 6600 MT (2 & 3 COMPARTMENT) REMOTE EVAPORATORS

DRAWING NO. 98-02542
SHEET 8 OF

REV B

SUPERSEDES

PRINT DISTRIBUTION

Carrier
A United Technologies Company
Carrier Transicold Division
Carrier Corporation
P.O. Box 4805
Syracuse, New York 13221

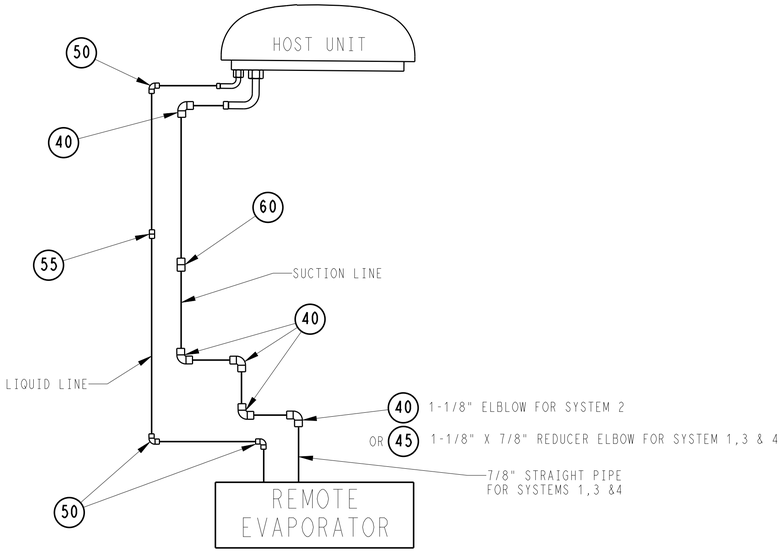

PIPING SCHEMATIC

SCHEMATIC FOR INFORMATION ONLY

EXACT PIPING TO BE DETERMINED BY REMOTE EVAPORATOR STYLE, APPLICATION AND LOCATION
ALL CONNECTING COMPONENTS ARE AS NEEDED

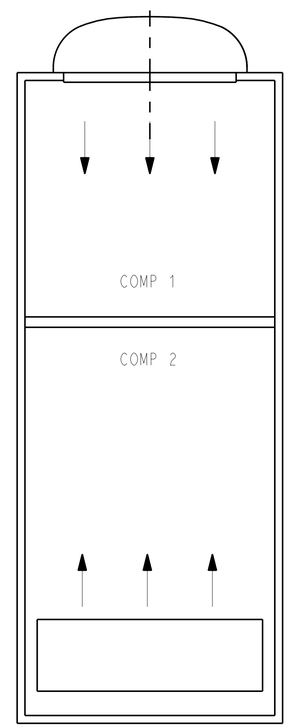

SYSTEM 1

COMP 2 - MHS 2200 SINGLE DISCHARGE EVAPORATOR
CHOOSE "MHS2200" FOR C2 EVAP CONFIG

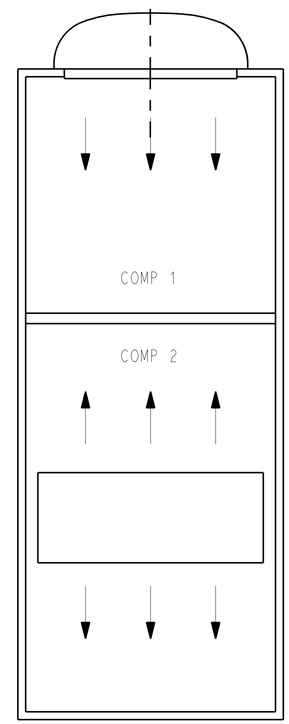

SYSTEM 2

COMP 2 - MHD 2200 DUAL DISCHARGE EVAPORATOR
CHOOSE "MHD2200" FOR C2 EVAP CONFIG

2 COMPARTMENT SYSTEMS WITH ONE 2200 SIZE REMOTE EVAPORATOR

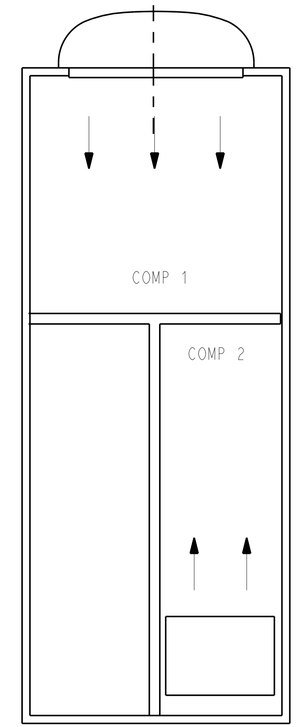

SYSTEM 3

COMP 2 - MHS 1100 SINGLE DISCHARGE EVAPORATOR
CHOOSE "MHS1100" FOR EVAP CONFIG

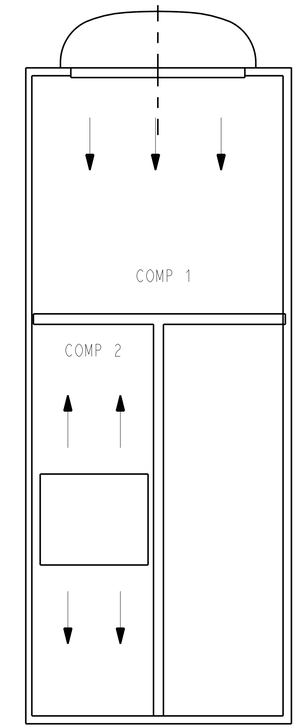

SYSTEM 4

COMP 2 - MHD 1100 DUAL DISCHARGE EVAPORATOR
CHOOSE "MHD1100" FOR EVAP CONFIG

2 COMPARTMENT SYSTEMS WITH ONE 1100 SIZE REMOTE EVAPORATOR

SYM	REVISION RECORD	DATE	BY	ENGR.	M.E.	NPCA NO.
B	REVISED PIPING SCHEMATIC;ADDED 3 COMPARTMENT M/T TO DRAWING	JAN-26-10	SS			72N0001P10
A	INITIAL RELEASE	APR-15-09	SS			72N020GP09

THIRD ANGLE PROJECTION

IMPERIAL INCH FORMAT:
UNLESS OTHERWISE SPECIFIED
DIMENSIONS ARE IN INCHES WITH
METRIC CONVERSIONS IN [MILLIMETERS]

TITLE
INSTALLATION INSTRUCTIONS
VECTOR 6600 MT (2 & 3 COMPARTMENT) REMOTE EVAPORATORS

DRAWING NO. 98-02542
SHEET 9 OF

REV B

SUPERSEDES

PRINT DISTRIBUTION

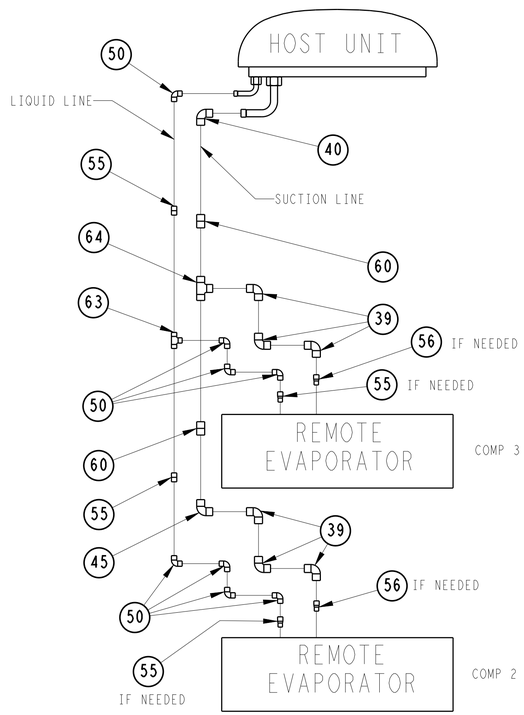

SCHEMATIC FOR INFORMATION ONLY

EXACT PIPING TO BE DETERMINED BY REMOTE EVAPORATOR STYLE, APPLICATION AND LOCATION ALL CONNECTING COMPONENTS ARE AS NEEDED

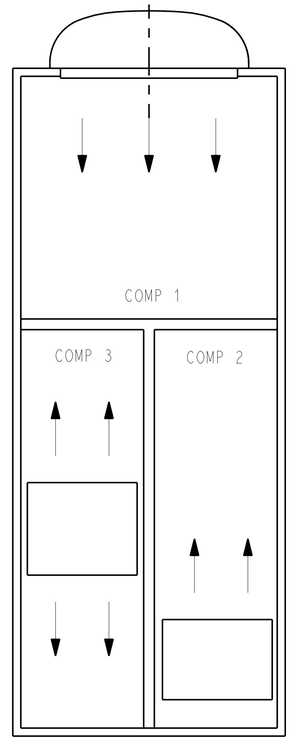

SYSTEM 5

COMP 2 - ONE MHS 1100 SINGLE DISCHARGE EVAPORATOR
COMP 3 - ONE MHD 1100 DUAL DISCHARGE EVAPORATOR
CHOOSE "MHS1100" FOR C2 EVAP CONFIG
CHOOSE "MHD1100" FOR C3 EVAP CONFIG

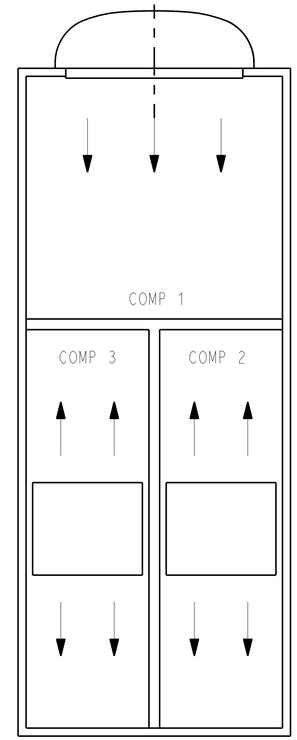

SYSTEM 6

COMP 2 - ONE MHD 1100 DUAL DISCHARGE EVAPORATORS
COMP 3 - ONE MHD 1100 DUAL DISCHARGE EVAPORATORS
CHOOSE "MHD1100" FOR C2 EVAP CONFIG
CHOOSE "MHD1100" FOR C3 EVAP CONFIG

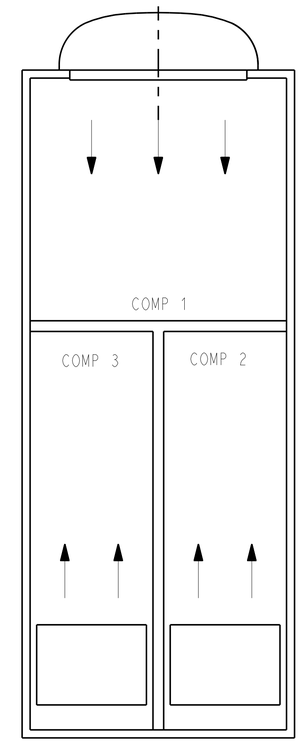

SYSTEM 7

COMP 2 - ONE MHS 1100 SINGLE DISCHARGE EVAPORATORS
COMP 3 - ONE MHS 1100 SINGLE DISCHARGE EVAPORATORS
CHOOSE "MHS1100" FOR C2 EVAP CONFIG
CHOOSE "MHS1100" FOR C3 EVAP CONFIG

3 COMPARTMENT SYSTEMS WITH TWO 1100 SIZE REMOTE EVAPORATORS

SYM	REVISION RECORD	DATE	BY	ENGR.	M.E.	NPCA NO.
B	NEW SHEET #10	JAN-26-10	SS			72N0001P10

THIRD ANGLE PROJECTION

IMPERIAL INCH FORMAT:
UNLESS OTHERWISE SPECIFIED
DIMENSIONS ARE IN INCHES WITH
METRIC CONVERSIONS IN [MILLIMETERS]

TITLE
INSTALLATION INSTRUCTIONS
VECTOR 6600 MT (2 & 3 COMPARTMENT) REMOTE EVAPORATORS

DRAWING NO. 98-02542
SHEET 10 OF

REV B

SUPERSEDES

PRINT DISTRIBUTION

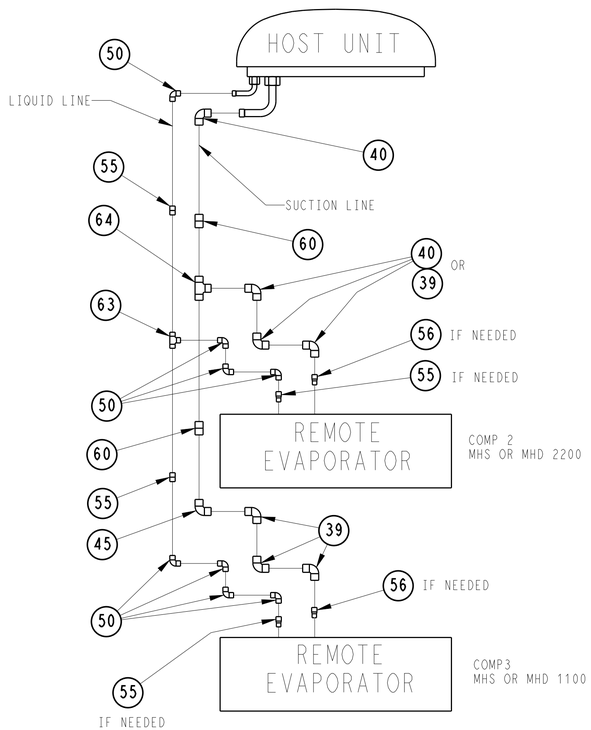

PIPING SCHEMATIC

SCHEMATIC FOR INFORMATION ONLY

EXACT PIPING TO BE DETERMINED BY REMOTE EVAPORATOR STYLE, APPLICATION AND LOCATION
ALL CONNECTING COMPONENTS ARE AS NEEDED

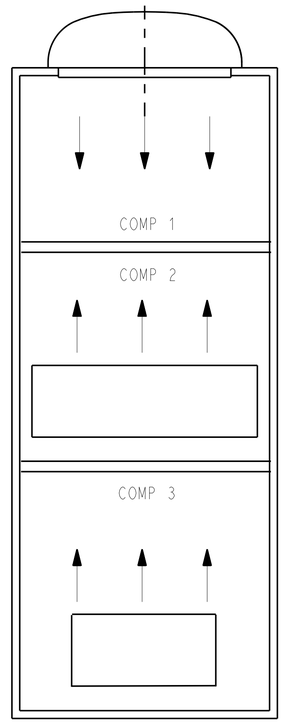

SYSTEM 13

COMP 2 - ONE MHS 2200 SINGLE DISCHARGE EVAPORATOR
COMP 3 - ONE MHS 1100 SINGLE DISCHARGE EVAPORATOR
CHOOSE "MHS2200" FOR C2 EVAP CONFIG
CHOOSE "MHS1100" FOR C3 EVAP CONFIG

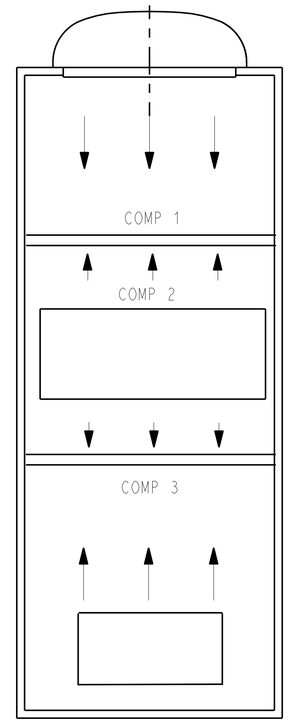

SYSTEM 14

COMP 2 - ONE MHD 2200 DUAL DISCHARGE EVAPORATOR
COMP 3 - ONE MHS 1100 SINGLE DISCHARGE EVAPORATOR
CHOOSE "MHD2200" FOR C2 EVAP CONFIG
CHOOSE "MHS1100" FOR C3 EVAP CONFIG

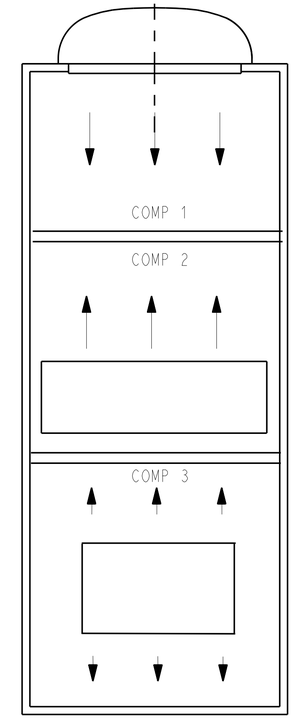

SYSTEM 15

COMP 2 - ONE MHS 2200 SINGLE DISCHARGE EVAPORATOR
COMP 3 - ONE MHD 1100 DUAL DISCHARGE EVAPORATOR
CHOOSE "MHS2200" FOR C2 EVAP CONFIG
CHOOSE "MHD1100" FOR C3 EVAP CONFIG

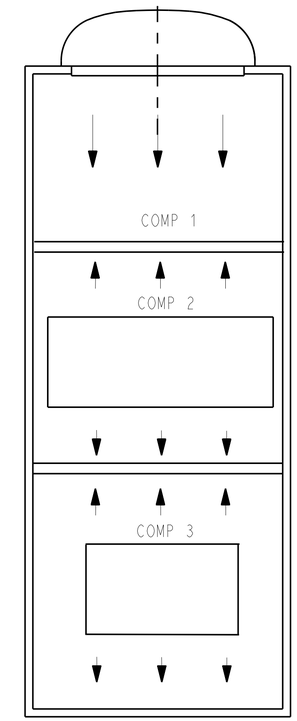

SYSTEM 16

COMP 2 - ONE MHD 2200 DUAL DISCHARGE EVAPORATOR
COMP 3 - ONE MHD 1100 DUAL DISCHARGE EVAPORATOR
CHOOSE "MHD2200" FOR C2 EVAP CONFIG
CHOOSE "MHD1100" FOR C3 EVAP CONFIG

3 COMPARTMENT SYSTEMS WITH ONE 1100 SIZE REMOTE EVAPORATOR AND ONE 2200 REMOTE EVAPORATOR)

SYM	REVISION RECORD	DATE	BY	ENGR.	M.E.	NPCA NO.
B	NEW SHEET #11	JAN-26-10	SS			72N0001P10

THIRD ANGLE PROJECTION

IMPERIAL INCH FORMAT:
UNLESS OTHERWISE SPECIFIED
DIMENSIONS ARE IN INCHES WITH
METRIC CONVERSIONS IN (MILLIMETERS)

TITLE
INSTALLATION INSTRUCTIONS
VECTOR 6600 MT (2 & 3 COMPARTMENT) REMOTE EVAPORATORS

DRAWING NO. 98-02542
SHEET 11 OF

REV B

SUPERSEDES

PRINT DISTRIBUTION

Carrier
A United Technologies Company
Carrier Transicold Division
Carrier Corporation
P.O. Box 4805
Syracuse, New York 13221

CONVERSION CHART

DECIMAL INCHES	FRACTIONAL INCHES
1.61	1-5/8
1.75	1-3/4
1.77	1-25/32
2.17	2-3/16
2.69	2-25/32
2.83	2-27/32
3.13	3-1/8
3.46	3-15/32
4.26	4-1/4
5.43	5-7/16
5.45	5-7/16
5.83	5-13/16
7.03	7-1/32
10.85	10-27/32
15.72	15-23/32
17.72	17-23/32
31.42	31-13/32
34.65	34-21/32
41.10	41-3/32

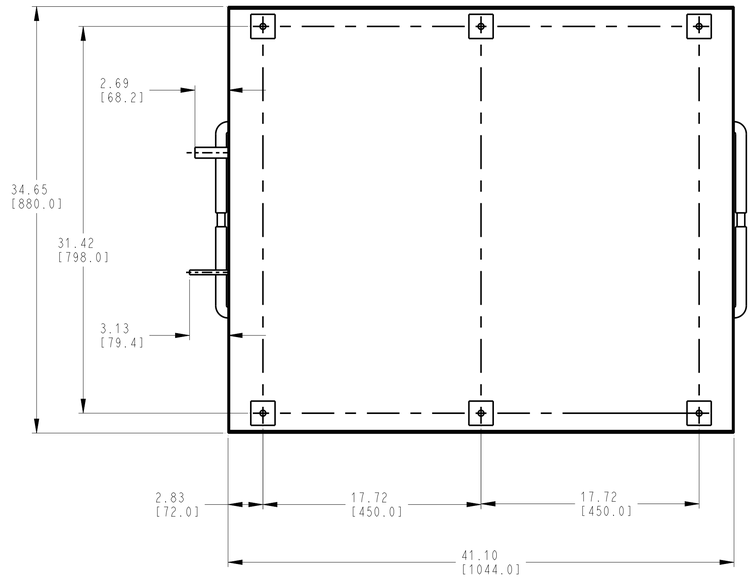

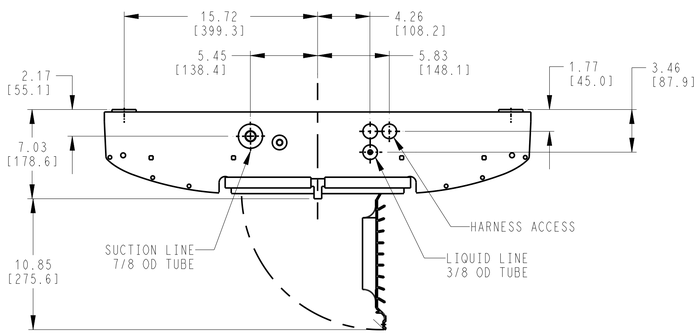

EVAPORATOR WEIGHT

MHD-1100 117LBS [53.1KG]

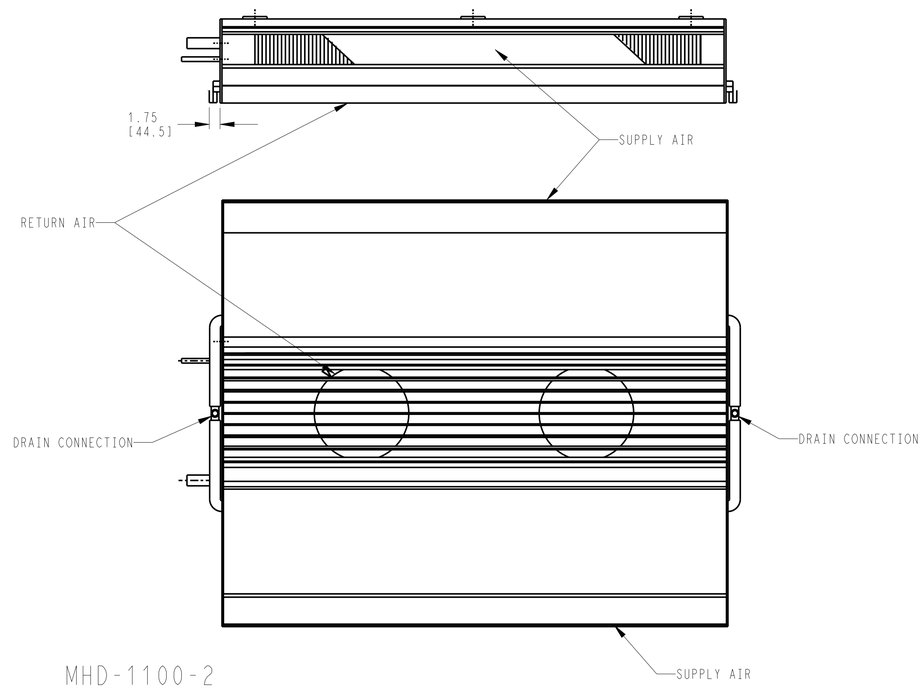

MHD-1100-2

SYM	REVISION RECORD	DATE	BY	ENGR.	M.E.	NPCA NO.
B	ADDED 3 COMPARTMENT M/T TO DRAWING	JAN-26-10	SS			72N0001P10
A	INITIAL RELEASE	APR-15-09	SS			72N020GP09

THIRD ANGLE PROJECTION

IMPERIAL INCH FORMAT:
UNLESS OTHERWISE SPECIFIED
DIMENSIONS ARE IN INCHES WITH
METRIC CONVERSIONS IN [MILLIMETERS]

TITLE
INSTALLATION INSTRUCTIONS
VECTOR 6600 MT (2 & 3 COMPARTMENT) REMOTE EVAPORATORS

DRAWING NO. 98-02542
SHEET 12 OF

REV B

SUPERSEDES

PRINT DISTRIBUTION

Carrier
A United Technologies Company
Carrier Transicold Division
Carrier Corporation
P.O. Box 4805
Syracuse, New York 13221

CONVERSION CHART	
DECIMAL INCHES	FRACTIONAL INCHES
0.91	29/32
1.36	1-3/8
1.61	1-5/8
1.65	1-21/32
1.97	1-31/32
2.44	2-7/16
2.95	2-15/16
4.33	4-11/32
4.72	4-11/32
7.03	7-1/32
10.85	10-27/32
26.22	10-27/32
26.30	26-5/16
31.42	31-13/32
34.65	34-21/32
84.65	84-21/32

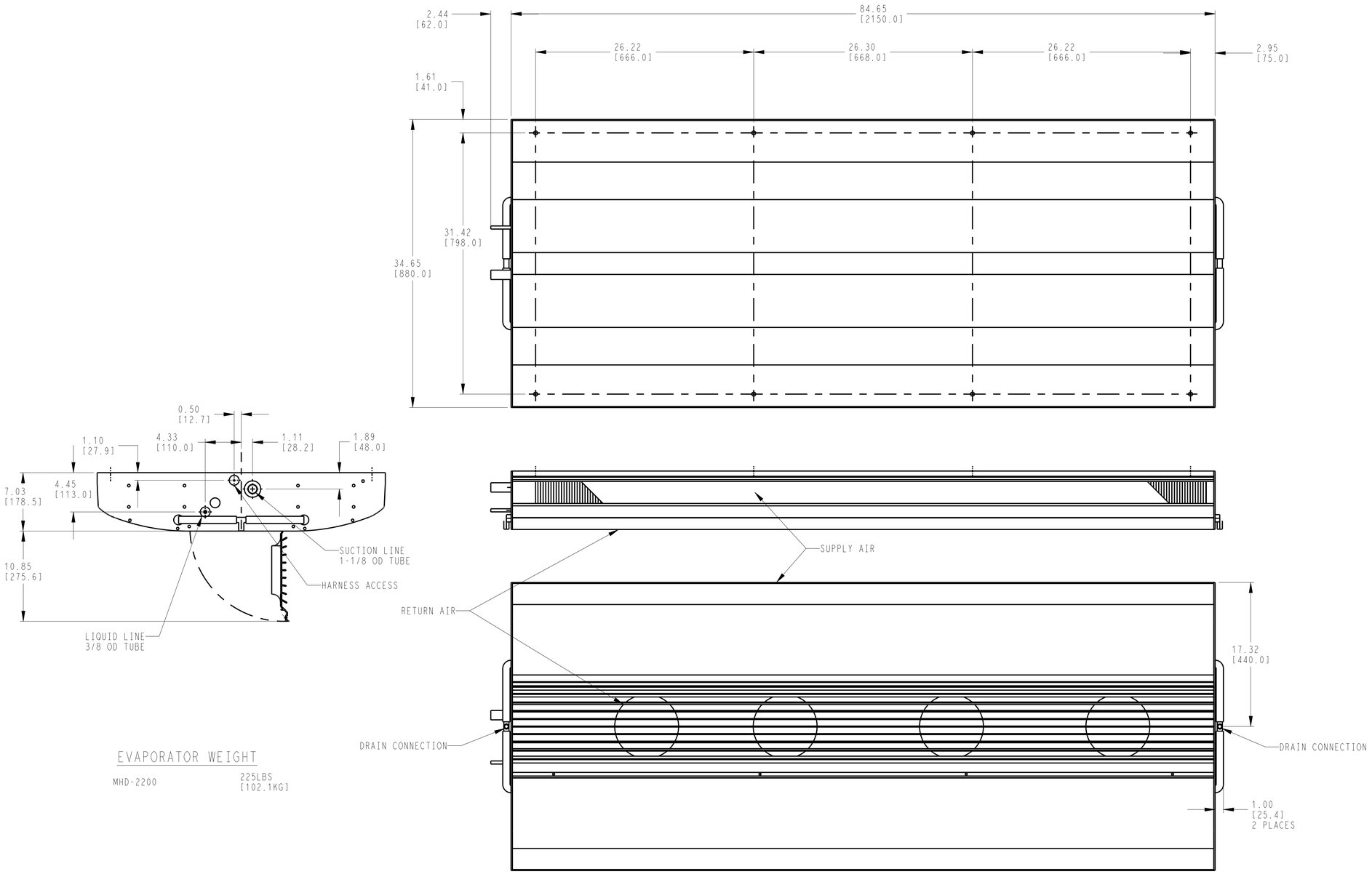

EVAPORATOR WEIGHT

MHD-2200	225LBS [102.1KG]

MHD-2200-4

SYM	REVISION RECORD	DATE	BY	ENGR.	M.E.	NPCA NO.
B	ADDED 3 COMPARTMENT M/T TO DRAWING	JAN-26-10	SS			72N0001P10
A	INITIAL RELEASE	APR-15-09	SS			72N020GP09

THIRD ANGLE PROJECTION

IMPERIAL INCH FORMAT:
UNLESS OTHERWISE SPECIFIED
DIMENSIONS ARE IN INCHES WITH
METRIC CONVERSIONS IN [MILLIMETERS]

TITLE
INSTALLATION INSTRUCTIONS
VECTOR 6600 MT (2 & 3 COMPARTMENT) REMOTE EVAPORATORS

DRAWING NO. 98-02542
SHEET 13 OF

REV B

SUPERSEDES _____

PRINT DISTRIBUTION _____

Carrier
A United Technologies Company
Carrier Transicold Division
Carrier Corporation
P.O. Box 4805
Syracuse, New York 13221

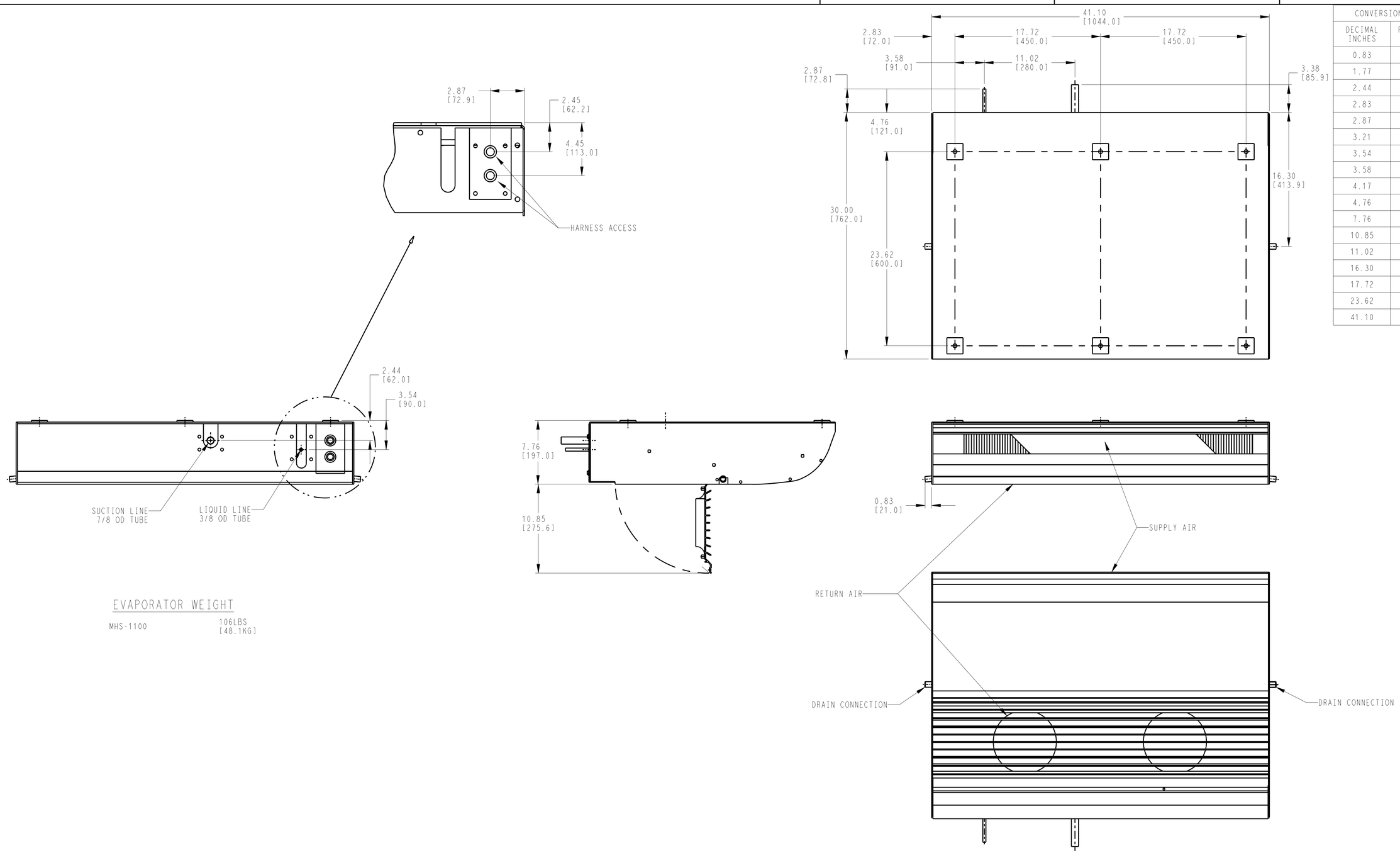

CONVERSION CHART	
DECIMAL INCHES	FRACTIONAL INCHES
0.83	27/32
1.77	1-25/32
2.44	2-7/16
2.83	2-27/32
2.87	2-7/8
3.21	3-7/32
3.54	3-17/32
3.58	3-19/32
4.17	4-3/16
4.76	4-3/4
7.76	7-3/4
10.85	10-27/32
11.02	11-1/32
16.30	16-5/16
17.72	17-23/32
23.62	23-5/8
41.10	41-3/32

EVAPORATOR WEIGHT

MHS-1100 106LBS [48.1KG]

MHS-1100-2

SYM	REVISION RECORD	DATE	BY	ENGR.	M.E.	NPCA NO.
B	ADDED 3 COMPARTMENT M/T TO DRAWING	JAN-26-10	SS			72N0001P10
A	INITIAL RELEASE	APR-15-09	SS			72N020GP09

THIRD ANGLE PROJECTION

IMPERIAL INCH FORMAT: UNLESS OTHERWISE SPECIFIED DIMENSIONS ARE IN INCHES WITH METRIC CONVERSIONS IN [MILLIMETERS]

TITLE
INSTALLATION INSTRUCTIONS
VECTOR 6600 MT (2 & 3 COMPARTMENT) REMOTE EVAPORATORS

DRAWING NO. 98-02542 SHEET 14 OF

REV B

SUPERSEDES

PRINT DISTRIBUTION

Carrier
A United Technologies Company
Carrier Transicold Division
Carrier Corporation
P.O. Box 4805
Syracuse, New York 13221

CONVERSION CHART	
DECIMAL INCHES	FRACTIONAL INCHES
0.79	25/32
1.68	1-11/16
1.81	1-13/16
2.31	2-5/16
2.32	2-5/16
2.44	2-7/16
2.95	2-15/16
3.88	3-15/16
4.31	4-5/16
4.45	4-7/16
7.87	7-7/8
10.85	10-27/32
13.90	13-29/32
15.42	15-13/32
23.62	23-5/8
26.22	26-7/32
26.30	26-5/16
27.56	27-9/16
66.61	66-5/8
84.65	84-21/32

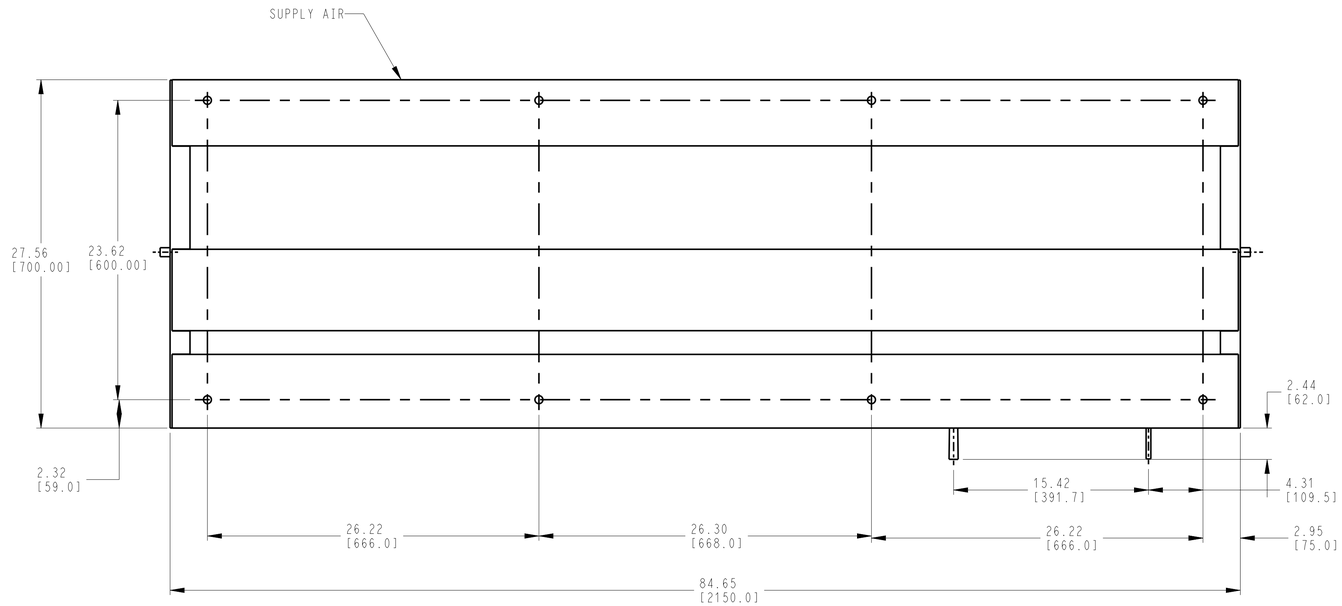

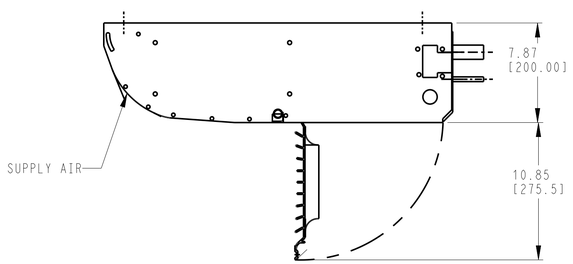

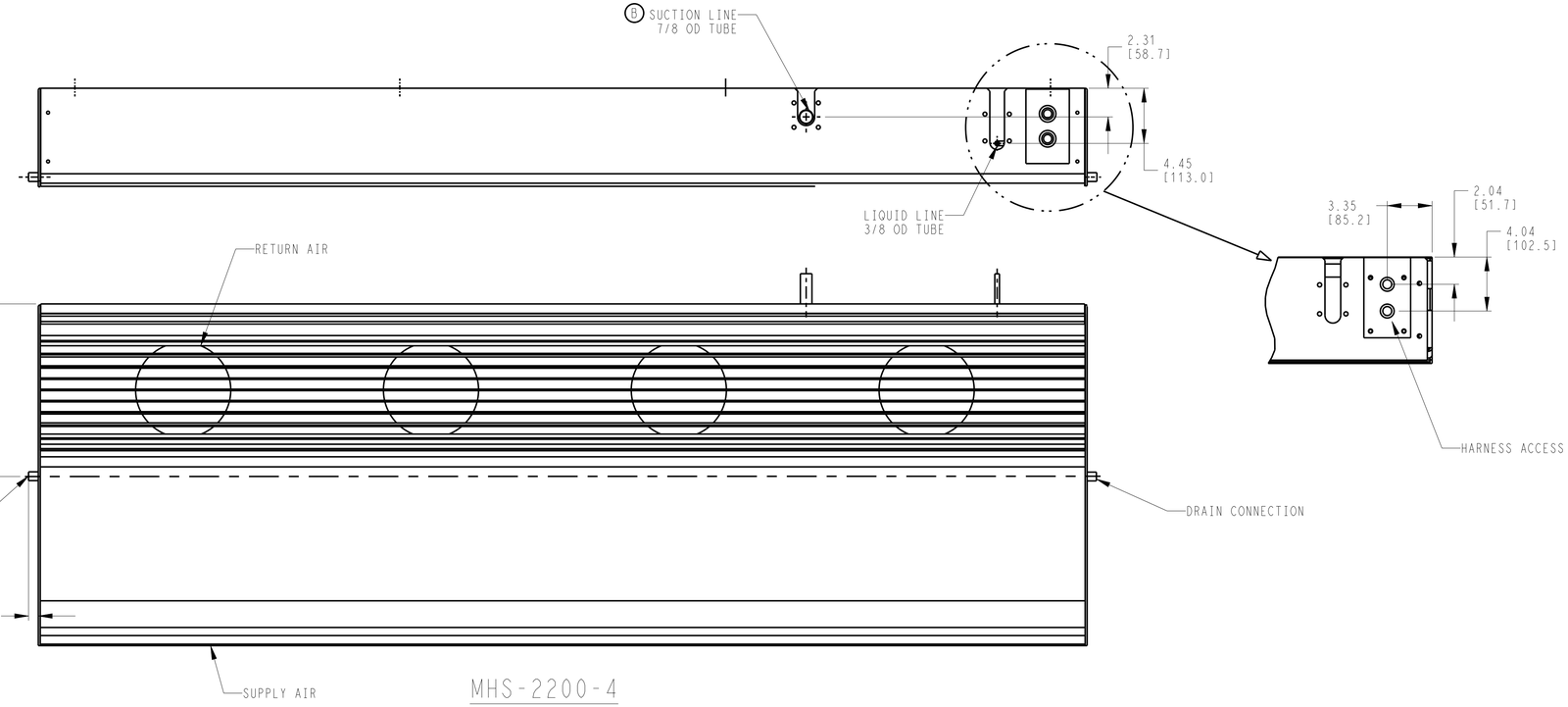

EVAPORATOR WEIGHT

MHS-2200	207LBS [98.0KG]

MHS-2200-4

SYM	REVISION RECORD	DATE	BY	ENGR.	M.E.	NPCA NO.
B	SUCTION LINE 7/8 OD TUBE WAS 1-1/8 OD TUBE; ADDED 3 COMPARTMENT M/T TO DRAWING	JAN-26-10	SS			72N0001P10
A	INITIAL RELEASE	APR-15-09	SS			72N020GP09

THIRD ANGLE PROJECTION

IMPERIAL INCH FORMAT: UNLESS OTHERWISE SPECIFIED DIMENSIONS ARE IN INCHES WITH METRIC CONVERSIONS IN [MILLIMETERS]

TITLE INSTALLATION INSTRUCTIONS
VECTOR 6600 MT (2 & 3 COMPARTMENT) REMOTE EVAPORATORS

DRAWING NO. 98-02542 SHEET 15 OF

REV B

SUPERSEDES

PRINT DISTRIBUTION