Carrier

Carrier XCT8™

The VRF system with the Power of 8

XCT8™

102_Carrier- Thailand XCT8 Brochure_25-01-2024.indd 1 25/01/24 9:14 PM

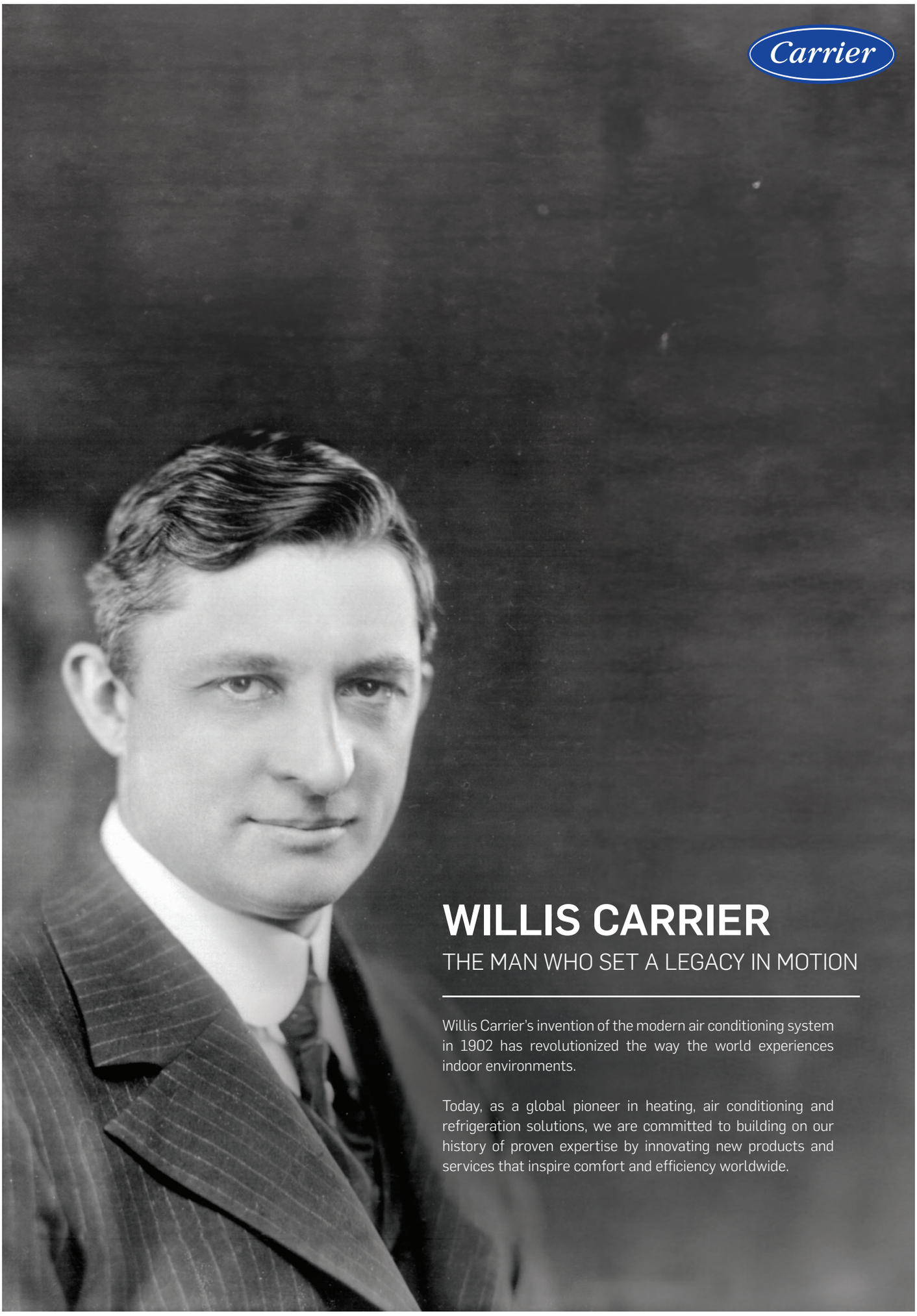

WILLIS CARRIER

THE MAN WHO SET A LEGACY IN MOTION

Willis Carrier's invention of the modern air conditioning system in 1902 has revolutionized the way the world experiences indoor environments.

Today, as a global pioneer in heating, air conditioning and refrigeration solutions, we are committed to building on our history of proven expertise by innovating new products and services that inspire comfort and efficiency worldwide.

102_Carrier- Thailand XCT8 Brochure_25-01-2024.indd 2 25/01/24 9:14 PM

TABLE OF **CONTENTS**

I. Overview 04

II. Outdoor Unit Specifications | 38VT0-88CTST 11

III. Indoor Unit Features 16

- 4-Way Cassette (High Performance) | 40VU-H-8S-JEE 20
- 4-Way Cassette | 40VU-S-8S-TST 22
- Compact 4-Way Cassette | 40VU-C-8S-TEE 24
- 1-Way Cassette | 40VU-1-8S-TST 26
- Slim Duct | 40VD-MP8S-CEE 28
- Concealed Ducted | 40VD-S-8S-TST 30
- Concealed Ducted (High Static Pressure) | 40VD-H-8S-TST 32
- Fresh Air Intake | 40VD-A-8S-TST 34
- Ceiling | 40VC-S-8S3TST 36
- Hi-Wall | 40VK-S-8S-TST 38
- DX Coil Interface Advance | 40VAM-C8FATEE, 40VA-V8-ATEE 39
- Air-to-Air Heat Exchanger | VN-U-SY-E 41

IV. Control Solutions 43

V. Technical Guidebook 51

VI. Seamless Serviceability 55

VII. Reliable Simulation with CFD 56

102_Carrier- Thailand XCT8 Brochure_25-01-2024.indd 3 25/01/24 9:14 PM

OVERVIEW

CARRIER XCT8

EXPERIENCE THE POWER OF 8

GET THE POWER OF PERFORMANCE & EFFICIENCY

Discover the next generation of efficient VRF systems for ultimate flexibility and sustainability in cooling. Engineered in Japan with cutting-edge expertise, the XCT8 integrates latest technological innovations and provides multiple customization options to achieve top-class efficiency and unmatched comfort.

Enhanced Efficiency | Improved Flexibility | Superior Serviceability

Benefits for the consultants

XCT8 offers unlimited possibilities in terms of capacity, connectivity, indoor unit lineup and control solutions, providing the correct solution for your customers' needs. Carrier's intuitive selection tool will guide you through the selection process with minimal input from your side, ensuring trouble-free installation and operation.

Benefits for the users

There is nothing like a comfortable place to enjoy the present moment. Full of Carrier innovations, the new XCT8 guarantees year-round comfort combined with superior energy management, advanced air filtration and full-control solutions for maximized product usability.

Benefits for the installers

XCT8's brand-new chassis is crafted with a compact and lightweight design and technology to enable easier installation. It comes with streamlined piping work, reduced additional refrigerant recharge and simplified test runs.

102_Carrier- Thailand XCT8 Brochure_25-01-2024.indd 4 25/01/24 9:14 PM

GET THE POWER OF A BRAND NEW CHASSIS

LARGE OUTDOOR UNIT CAPACITY

Capacity:
Up to 26HP single module / 120HP combinations

Strong static pressure:
Up to 80Pa available

Simplified maintenance:
Easy access to main internal components

Compact chassis:
Only 1,690mm height

Earthquake- and typhoon-resistant:
Durability chassis

Super-efficient:
Full product height heat exchanger

14A to 26HP

8 to 14HP

102_Carrier- Thailand XCT8 Brochure_25-01-2024.indd 5 25/01/24 9:15 PM

TWIN ROTARY COMPRESSOR

The twin rotary compressor brings outstanding performance to XCT8 for enhanced system reliability.

- Large capacity
- Wide operating range
- Low required refrigerant
- Low vibration
- DLC treatment

TOP-CLASS EFFICIENCY

The XCT8 utilizes new and improved, highly efficient core technologies, resulting in greater energy efficiency and performance.

INDUSTRY Top Class

50% part load

COP up to 8.6

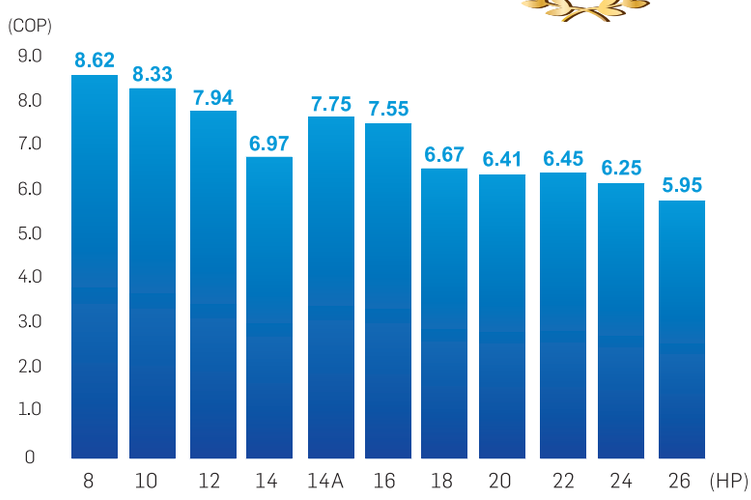

100% load

COP up to 5.2

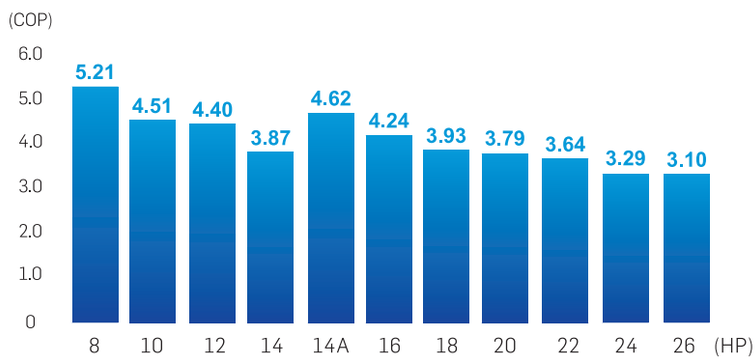

102_Carrier- Thailand XCT8 Brochure_25-01-2024.indd 6 25/01/24 9:15 PM

GET THE **POWER OF ABSOLUTE FLEXIBILITY**

Customizable to deliver the best results, the XCT8 is powered to exceed the limits of VRF for any building design and cooling requirement, resulting in a combination that offers options on efficiency, space and cost.

Free combination
4,000 combination patterns

Long piping length
1,200m max.

High piping lift
110m max.

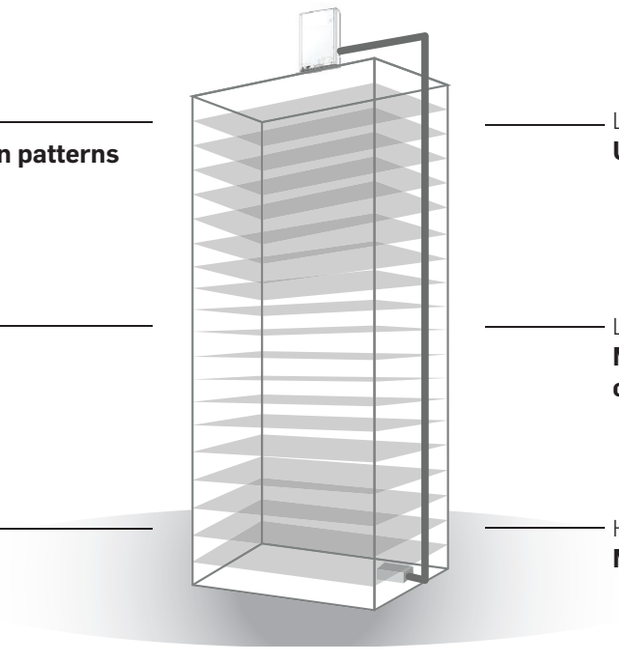

Large IDU connection
Up to 128 units

Large system capacity
Max. 120HP by 5 units connection

High diversity
Max. 200% combination

FLEXIBLE FREE COMBINATION

Unit combination can be customized to meet the requirements of the installation site.

A total of **4,000 combination** patterns are available

Combinations examples:

XCT8 52HP with a total of **69** combinations

Standard (Space-saving)

COP: **3.10**
Width: **2,600mm**

Balance (Space-saving)

COP: **3.95**
Width: **3,610mm**

Balance (Moderate)

COP: **4.09**
Width: **4,020mm**

Balance efficiency

COP: **4.62**
Width: **5,030mm**

Max. Highest efficiency

COP: **4.87**
Width: **5,630mm**

Note: Outdoor units must be aligned from larger to smaller capacity.

102_Carrier- Thailand XCT8 Brochure_25-01-2024.indd 7 25/01/24 9:15 PM

GET THE **POWER OF COMFORT ABOVE ALL**

Empowering occupants with absolute comfort is XCT8's top priority. It can not only connect with a wide range of indoor units adapted to any room configuration, but also offer the most accurate refrigerant flow management system.

WIDE OPERATING TEMPERATURE RANGE

The refrigerant heat sink can bring down the temperature of electronic parts. By using this new function, XCT8 can operate in high ambient conditions up to 52°C.

XCT8 is empowered to select the optimal heat exchanger size based on the operating mode, outdoor temperature and capacity load. It allows XCT8 to realize high efficiency not only during full load, but also during part load operations.

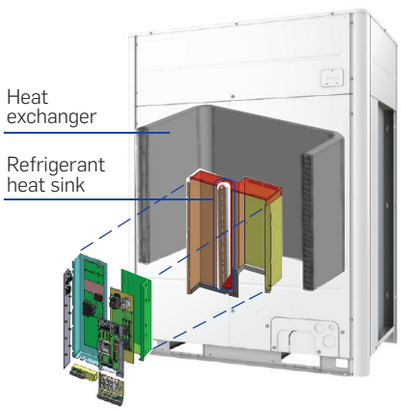

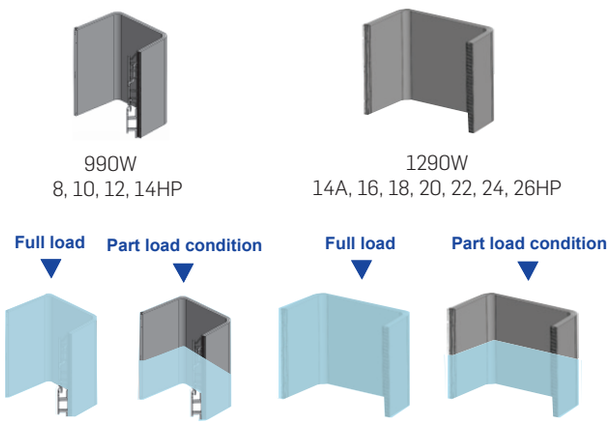

STRONG ADAPTABILITY

XCT8 integrates new features to adapt its operations to any prevalent local constraints by maintaining a constant target — the alliance of comfort and energy savings.

Splitted heat exchanger
Heat exchanger usage area automatically varies depending on workload, the need to maximize energy savings and the system's reliability.

Demand control
Smart Grid-ready with remote or dry contact demand control function.

Auto backup function
Automatic backup in case of combinations systems failure.

Rotation drive
Smart control to automatically equalize compressor operating hours.

Sealed inverter box
Fully sealed inverter box prevents malfunction due to small animals.

Auto refrigerant charge
Automatic refrigerant charge minimize installation workload.

102_Carrier- Thailand XCT8 Brochure_25-01-2024.indd 8 25/01/24 9:15 PM

GET THE **POWER OF INSTALLATION FLEXIBILITY**

REUSABLE PIPES

With the flexibility of reusing pipes, Carrier XCT8 replaces any existing VRF in a quicker time — a cost-effective VRF solution.

AUTO REFRIGERANT CHARGE

The auto refrigerant recharge comes in handy when reusing existing pipes whose dimensions are not known. It also saves time and installation workload of the service team by accurately and reliably recharging the refrigerant.

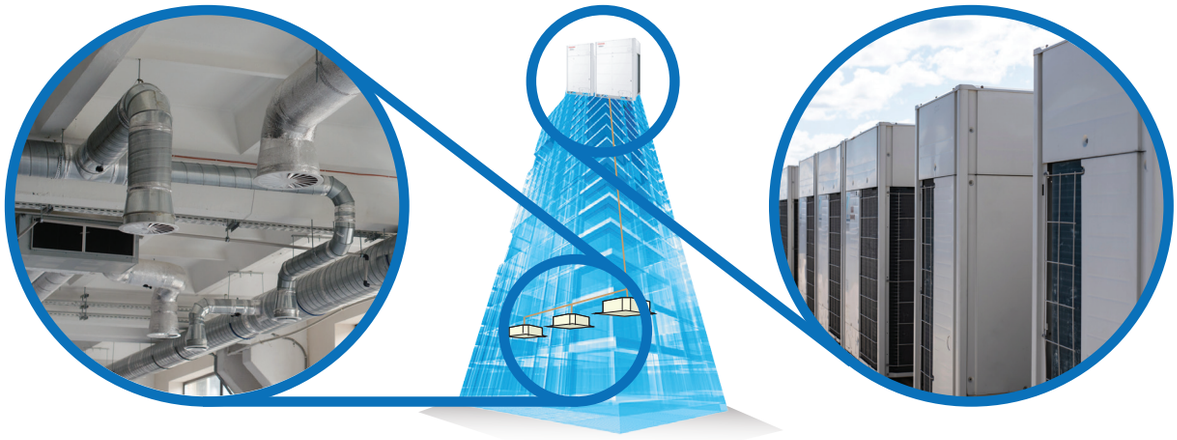

CONVENTIONAL VRF

- Pump down and remove existing CDU
- Remove existing refrigerant pipe
- Set new refrigerant pipe
- Install IDU and wiring
- Install CDU and wiring
- Airtightness test
- System evacuation
- Necessary refrigerant calculation
- Refrigerant pre-charge by liquid pipe
- Refrigerant charge by gas pipe

XCT8

- Pump down and remove existing CDU
- Install CDU and wiring
- Airtightness test
- System evacuation
- Approximate refrigerant calculation
- Refrigerant pre-charge by liquid pipe
- Auto refrigerant charge

102_Carrier- Thailand XCT8 Brochure_25-01-2024.indd 9 25/01/24 9:15 PM

RELIABILITY

Carrier XCT8 uses a double-pipe sub-cool heat exchanger to completely transform the charging refrigerant from liquid to gas. XCT8 therefore reduces the risk of liquid compression even under conditions of high-speed refrigerant charge.

ACCURACY

Carrier XCT8 senses temperature data through double-pipe sub-cool heat exchanger and IDU PMV condition to accurately identify the requisite amount of refrigerant.

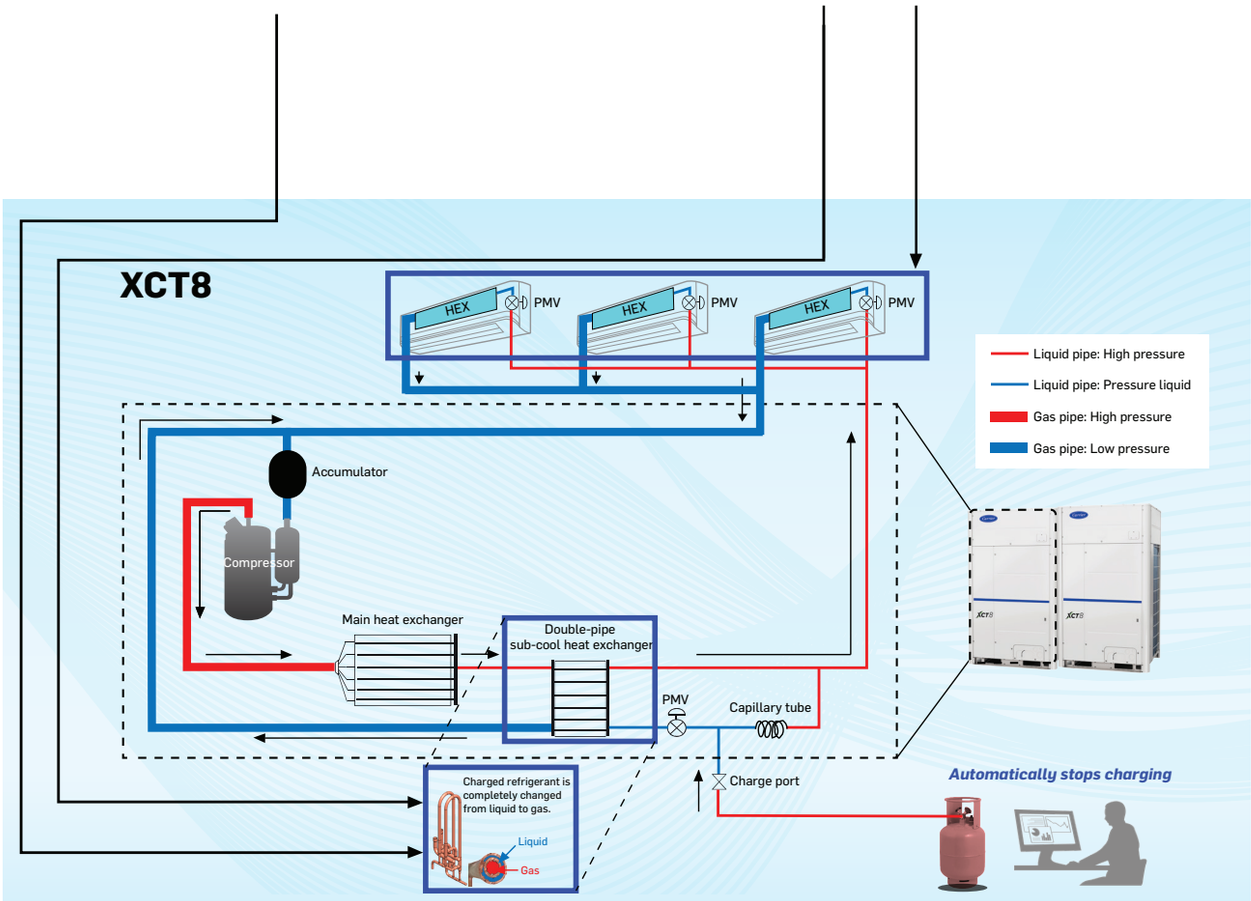

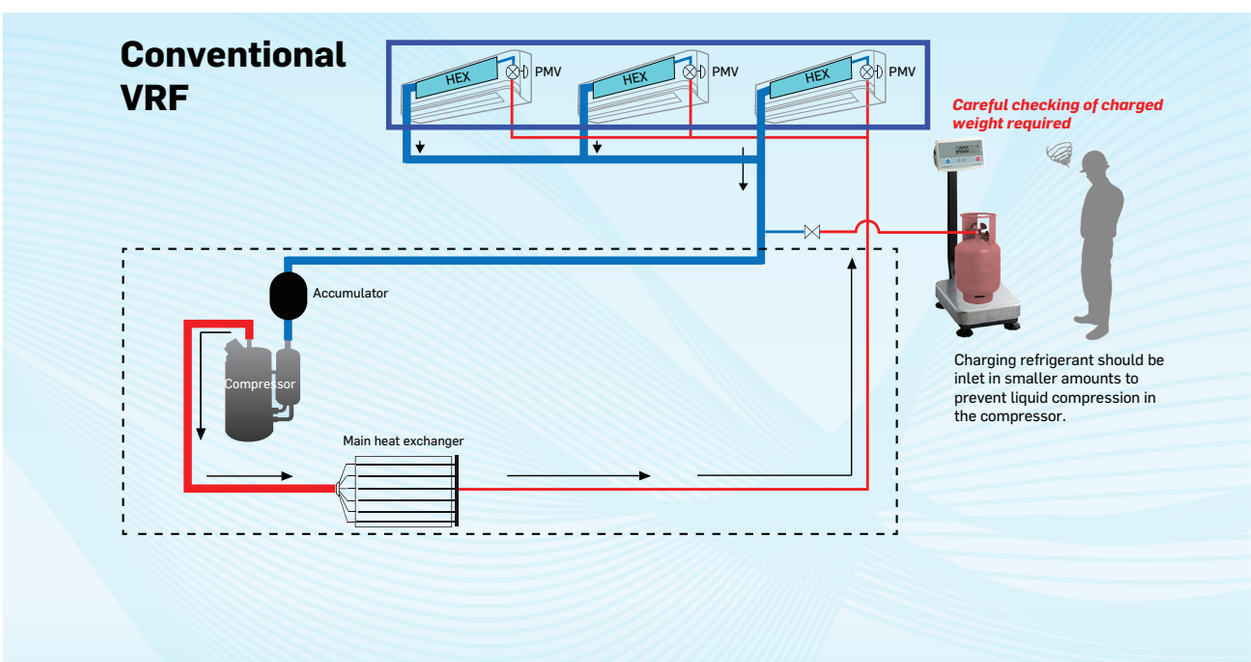

102_Carrier- Thailand XCT8 Brochure_25-01-2024.indd 10 25/01/24 9:15 PM

OUTDOOR UNIT SPECIFICATIONS

38VT0-88CTST

2-PIPE VRF (COOLING ONLY)

NEW

The latest generation of Carrier VRF, Carrier XCT8 comes with a new chassis, compressor and heat exchanger to deliver customized efficiency.

CAPACITY
8HP–120HP

OPERATION
-5°C – +52°C

XCT8

Performances

OutdoorUnit 38VT	008188CTST	010188CTST	012188CTST	014188CTST	014A88CTST	016188CTST	018188CTST	020188CTST	022188CTST	024188CTST	026188CTST
OutdoorUnit (Anti-Corrosion)38VT	008188CTSTZ	010188CTSTZ	012188CTSTZ	014188CTSTZ	014A88CTSTZ	016188CTSTZ	018188CTSTZ	020188CTSTZ	022188CTSTZ	024188CTSTZ	026188CTSTZ
	8HP	10HP	12HP	14HP	14HP	16HP	18HP	20HP	22HP	24HP	26HP
Cooling capacity kW	22.4	28.0	33.5	40.0	40.0	45.0	50.4	56.0	61.5	67.0	73.0
BTU (27.0 C DB/19.0 C WB)	76,400	95,500	114,300	136,400	136,400	154,000	172,000	191,000	210,000	228,600	250,000
BTU (27.0 C DB/19.5 C WB)	77,300	96,700	115,700	138,100	138,100	156,000	174,000	193,400	212,700	231,500	253,000
COP (Capacity 100%) kW/kW	5.21	4.51	4.40	3.87	4.62	4.24	3.93	3.79	3.64	3.29	3.10
COP (Capacity 50%) kW/kW	8.62	8.33	7.94	6.97	7.75	7.55	6.67	6.41	6.45	6.25	5.95
Maximum overcurrent protection A	20	25	25	32	40	50	50	50	63	63	63
Capacity control %	10–100	10–100	8–100	7–100	7–100	6–100	6–100	5–100	5–100	4–100	4–100
Airflow m³/h	9,900	10,500	11,700	11,880	13,750	14,300	14,300	15,200	16,500	16,500	18,200
Sound power level dB(A)	76.0	77.0	79.0	82.0	80.0	82.0	82.0	83.0	86.0	86.0	88.0
Sound pressure level dB(A)	53.0	55.0	58.0	58.0	59.0	60.0	61.0	61.0	63.0	63.0	66.0
Number of fan(s) unit	1								2		
External static pressure available Pa	80							50	80		
Dimensions (HxWxD) mm	1,690 x 990 x 780				1,690 x 1,290 x 780						
Weight kg	223				294				329		
Compressor type	Hermetic Twin Rotary				2 x Hermetic Twin Rotary						
Refrigerant charge R410A kg	6.0				9.0						
Gas line type - diameter mm	Brazing - 19.1	Brazing - 22.2	Brazing - 28.6	Brazing - 28.6	Brazing - 28.6	Brazing - 28.6	Brazing - 28.6	Brazing - 28.6	Brazing - 28.6	Brazing - 34.9	Brazing - 34.9
Liquid line type - diameter mm	Brazing - 12.7	Brazing - 12.7	Brazing - 12.7	Brazing - 15.9	Brazing - 15.9	Brazing - 15.9	Brazing - 15.9	Brazing - 15.9	Brazing - 19.1	Brazing - 19.1	Brazing - 19.1
Farthest piping equivalent length m	210										
Farthest piping real length m	190										
Maximum total piping length m	500										
Maximum lift (indoor unit above/below) m	40/110*1										
Operating range - DB °C	-5/52										
Power supply V-ph-Hz	400(380/415)-3-50										

Installation Space

MMY-MUP0801T8(J)P, MMY-MUP1001T8(J)P, MMY-MUP1201T8(J)P, MMY-MUP1401T8(J)P

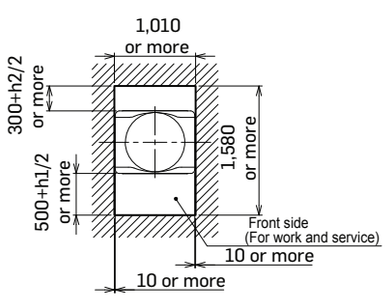

Space required for service

MMY-MUP14A1T8(J)P, MMY-MUP1601T8(J)P, MMY-MUP1801T8(J)P, MMY-MUP2001T8(J)P

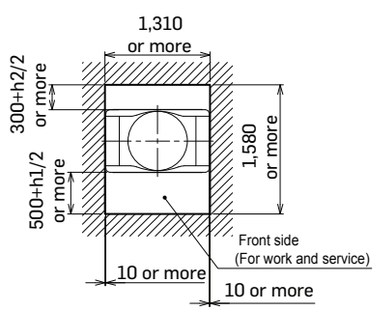

Space required for service

MMY-MUP2201T8(J)P, MMY-MUP2401T8(J)P, MMY-MUP2601T8(J)P

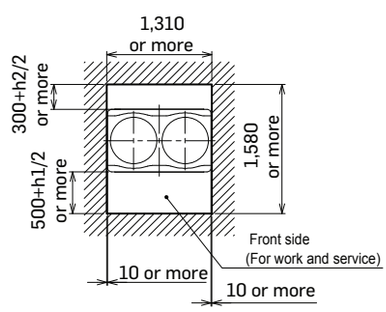

Space required for service

Leave space necessary for running, installation and servicing.
- If there is an obstacle above the outdoor unit, leave a space of 2,000mm or more to the top end of the outdoor unit.
- If there is a wall around the outdoor unit, make sure that its height does not exceed 800mm.

102_Carrier- Thailand XCT8 Brochure_25-01-2024.indd 11 25/01/24 9:16 PM

CDU

Capacity Table

Capacity				Combination	Model	COP
HP	Cooling (kW)	*BTU 1	*BTU 2			
8	22.4	76,400	77,300	-	38VT008188CTST	5.21
10	28.0	95,500	96,700	-	38VT010188CTST	4.51
12	33.5	114,300	115,700	-	38VT012188CTST	4.40
14	40.0	136,400	138,100	-	38VT014188CTST	3.87
14	40.0	136,400	138,100	-	38VT014A88CTST	4.62
16	45.0	154,000	156,000	-	38VT016188CTST	4.24
18	50.4	172,000	174,000	-	38VT018188CTST	4.40
20	56.0	191,000	193,400	-	38VT020188CTST	3.79
22	61.5	210,000	212,700	-	38VT022188CTST	3.64
24	67.0	228,600	231,500	-	38VT024188CTST	3.29
26	73.0	250,000	253,000	-	38VT026188CTST	3.10
28	80.0	272,800	276,300	14+14	38VT028S88CTST	3.90
30	83.9	290,400	294,100	18+12	38VT030S88CTST	4.10
32	89.5	308,000	312,000	20+12	38VT032S88CTST	4.00
34	95.0	326,000	330,200	22+12	38VT034S88CTST	3.90
36	100.5	344,000	348,400	24+12	38VT036S88CTST	3.60
38	106.5	364,000	368,700	26+12	38VT038S88CTST	3.40
40	113.0	382,000	386,900	26+14	38VT040S88CTST	3.30
42	117.5	401,000	406,200	22+20	38VT042S88CTST	3.70
44	123.0	420,000	425,400	22+22	38VT044S88CTST	3.60
46	128.5	444,400	450,100	24+22	38VT046S88CTST	3.50
48	134.0	462,000	468,000	24+24	38VT048S88CTST	3.30
50	140.0	480,000	486,200	26+24	38VT050S88CTST	3.20
52	146.0	498,000	504,400	26+26	38VT052S88CTST	3.10
54	151.0	516,000	522,700	22+20+12	38VT054S88CTST	3.80
56	156.5	535,000	541,900	22+22+12	38VT056S88CTST	3.80
58	162.0	554,000	561,200	24+22+12	38VT058S88CTST	3.60
60	167.5	574,000	581,400	24+24+12	38VT060S88CTST	3.50
62	174.0	593,000	600,200	24+24+14	38VT062S88CTST	3.40
64	179.5	612,000	619,400	26+26+12	38VT064S88CTST	3.30
66	184.5	631,000	638,600	22+22+22	38VT066S88CTST	3.60
68	190.0	650,000	657,800	24+24+20	38VT068S88CTST	3.40
70	195.5	669,000	677,100	24+24+22	38VT070S88CTST	3.40
72	201.0	686,000	694,300	24+24+24	38VT072S88CTST	3.30
74	207.0	707,000	715,500	26+24+24	38VT074S88CTST	3.20
76	213.0	726,000	734,800	26+26+24	38VT076S88CTST	3.20
78	219.0	745,000	754,000	26+26+26	38VT078S88CTST	3.10
80	223.5	764,000	773,200	24+22+22+12	38VT080S88CTST	3.60
82	229.0	784,000	793,500	24+24+22+12	38VT082S88CTST	3.50
84	234.5	803,000	812,700	24+24+24+12	38VT084S88CTST	3.40
86	240.5	822,000	831,900	26+24+24+12	38VT086S88CTST	3.40
88	246.5	841,000	851,100	26+26+24+12	38VT088S88CTST	3.30
90	252.5	860,000	870,400	26+26+26+12	38VT090S88CTST	3.20
92	259.0	879,000	889,600	26+26+26+14	38VT092S88CTST	3.20
94	262.5	898,000	908,800	24+24+24+22	38VT094S88CTST	3.40
96	268.0	917,000	928,100	24+24+24+24	38VT096S88CTST	3.30
98	274.5	936,000	947,300	26+26+24+22	38VT098S88CTST	3.30
100	280.0	955,000	966,500	26+26+24+24	38VT100S88CTST	3.20
102	286.0	975,000	986,700	26+26+26+24	38VT102S88CTST	3.10
104	292.5	994,000	1,006,000	26+26+26+14+12	38VT104S88CTST	3.30
106	297.0	1,013,000	1,025,200	26+26+22+20+12	38VT106S88CTST	3.40
108	302.4	1,032,000	1,044,400	26+26+24+24+8	38VT108S88CTST	3.30
110	308.0	1,051,000	1,063,700	26+26+24+22+12	38VT110S88CTST	3.40
112	313.5	1,070,000	1,082,900	26+26+24+24+12	38VT112S88CTST	3.30
114	319.5	1,089,000	1,102,100	26+26+26+24+12	38VT114S88CTST	3.20
116	326.0	1,108,000	1,121,300	26+26+26+24+14	38VT116S88CTST	3.20
118	329.5	1,127,000	1,140,600	24+24+24+24+22	38VT118S88CTST	3.40
120	335.0	1,146,000	1,159,800	24+24+24+24+24	38VT120S88CTST	3.30

* BTU 1 Indoor air temperature 27.0˚C DB/19.0˚C WB, Outdoor temperature 35.0˚C DB.
* BTU 2 Indoor air temperature 27.0˚C DB/19.5˚C WB, Outdoor temperature 35.0˚C DB.

102_Carrier- Thailand XCT8 Brochure_25-01-2024.indd 12 25/01/24 9:16 PM

2-PIPE VRF (COOLING ONLY)

38VT0-88CTST

NEW

Piping Rules

			Allowable value	Piping section
Piping length	Total extension of pipe (Liquid pipe, real length)	Single ODU	500m	LA+LB+LC+La+Lb+Lc+Ld+Le+L1+L2+L3 +L4+L5+L6+L7+a+b+c+d+e+f+g+h+i+j
		Combination ODU	1,200m (*6)	
	Farthest piping length (*1)	Equivalent length	250m	LA+LB+LC+Le+L1+L3+L4+L5+L6+j
		Real length	210m	
	Equivalent length of farthest piping from 1st branching (*1)		90m (*2)	L3+L4+L5+L6+j
	Equivalent length of farthest piping between outdoor units		40m	LA+LB+LC+Le (LA+LB+LC+Ld)
	Max. equivalent length of main piping	Equivalent length	120m (*3)	L1
		Real length	100m (*3)	
	Max. equivalent length of outdoor unit connecting piping		10m	Le (La, Lb, Lc, Ld)
	Max. real length of indoor unit connecting piping		30m	a, b, c, d, e, f, g, h, i, j
	Max. equivalent length between branches		50m	L2, L3, L4, L5, L6, L7
Difference in height	Height between indoor and outdoor units	Upper outdoor unit	70m (*4)(*7)	-
		Lower outdoor unit	40m (*5)(*8)	-
	Height between indoor units		50m (*9)	-
	Height between outdoor units		5m	-

(*1) : (e) is the outdoor unit farthest from the 1st branch and (j) is the indoor unit farthest from the 1st branch.
(*2) : If the height difference (H1) between indoor and outdoor unit exceeds 3m, set 65m or less.
(*3) : If the max. combined outdoor unit capacity is 54HP or more, then max. equivalent length is 70m or less (real length is 50m or less).
(*4) : If the height difference (H2) between indoor units exceeds 3m, set 50m or less.
(*5) : If the height difference (H2) between indoor units exceeds 3m, set 30m or less.
(*6) : Total charging refrigerant is 140kgs or less.
(*7) : Extension up till 110m is possible with the below conditions:
- Single outdoor unit system
- Connected ratio of indoor units to outdoor units is below 105%
- Liquid side is increased by 1 size from the standard size
- Height between indoor units is equal to or less than 40m

(*8) : Extension up till 110m is possible with the below conditions:
- Height between indoor units is equal or less than 3m
- Connected ratio of indoor units to outdoor units is below 105%
- Minimum capacity of the connecting indoor units is more than 3HP

(*9) : If the connected ratio of indoor units to outdoor units is more than 105%, set 15m.

Carrier Piping

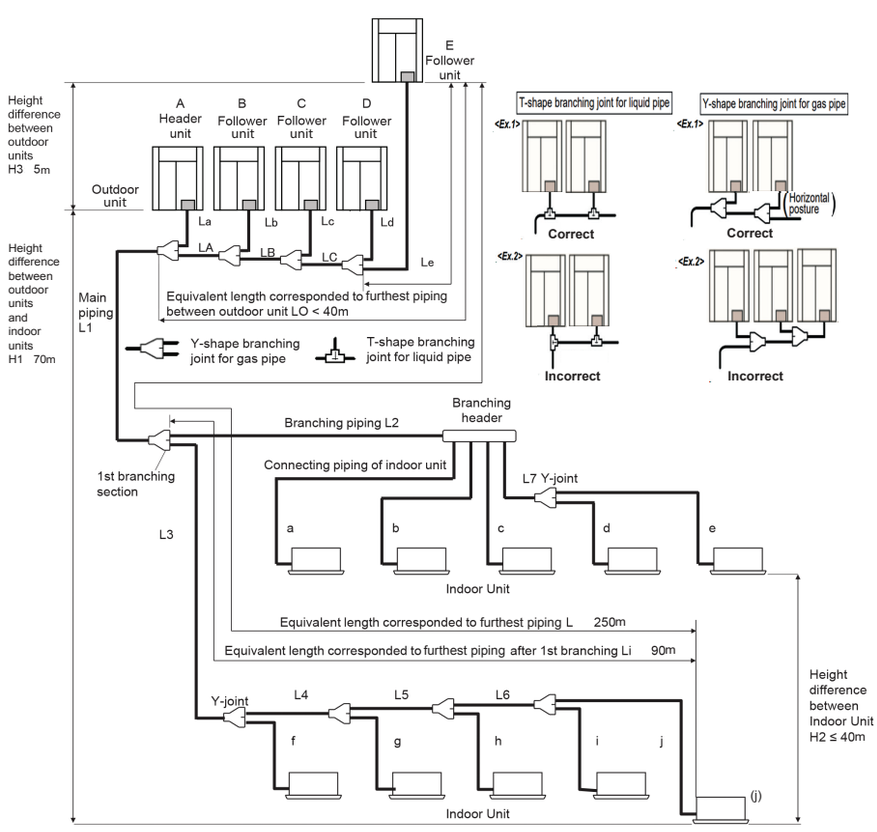

Drawings

MMY-MUP0801T8(J)P, MMY-MUP1001T8(J)P, MMY-MUP1201T8(J)P, MMY-MUP1401T8(J)P

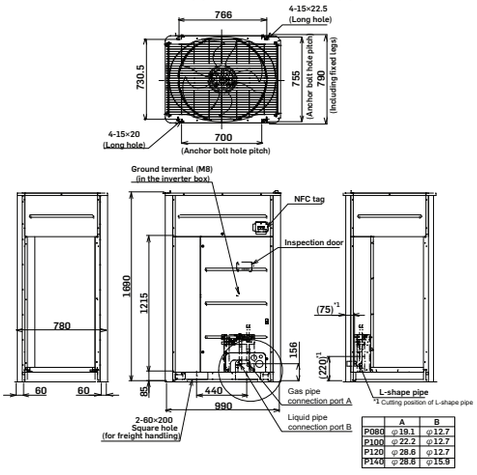

	A	B
P080	φ19.1	φ12.7
P100	φ22.2	φ12.7
P120	φ28.6	φ12.7
P140	φ28.6	φ15.9

MMY-MUP14A1T8(J)P, MMY-MUP1601T8(J)P, MMY-MUP1801T8(J)P, MMY-MUP2001T8(J)P

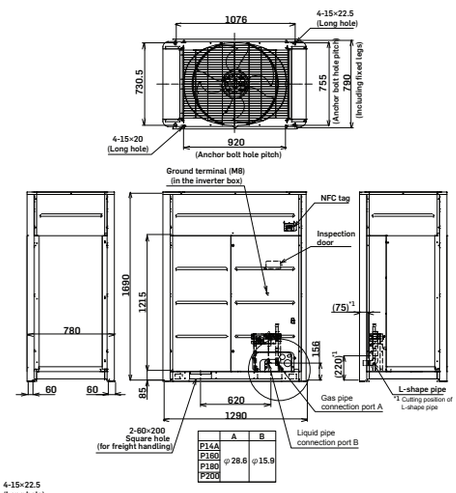

	A	B
P14A		
P160	φ28.6	φ15.9
P180		
P200		

MMY-MUP2201T8(J)P, MMY-MUP2401T8(J)P, MMY-MUP2601T8(J)P

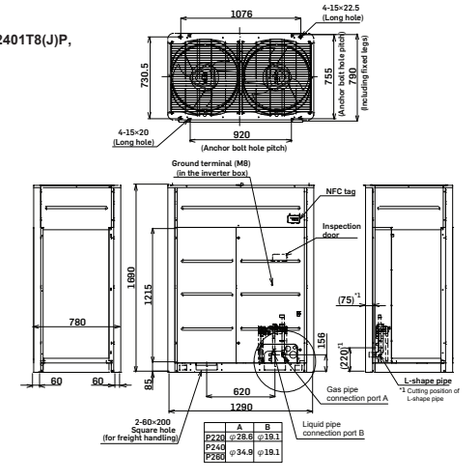

	A	B
P220	φ28.6	φ19.1
P240	φ34.9	φ19.1
P260		

Sound Pressure Levels

Unit: dB(A)

38VT008188CTST

Sound pressure level [dB(A)]	Cooling
	53.0

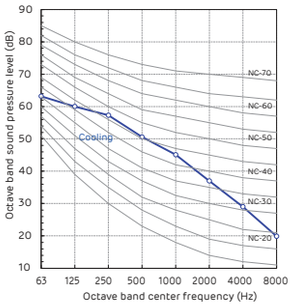

38VT010188CTST

Sound pressure level [dB(A)]	Cooling
	55.0

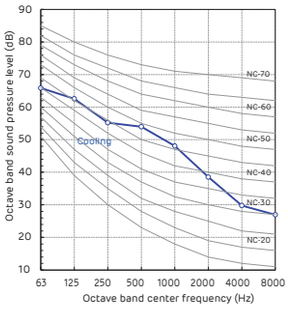

38VT012188CTST, 38VT014188CTST

Sound pressure level [dB(A)]	Cooling
	58.0

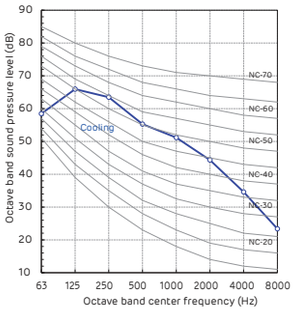

38VT014A88CTST

Sound pressure level [dB(A)]	Cooling
	59.0

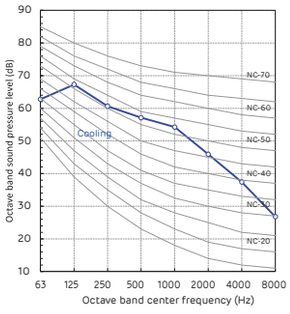

38VT016188CTST

Sound pressure level [dB(A)]	Cooling
	60.0

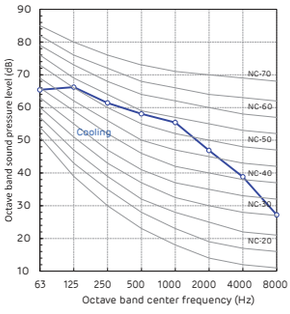

38VT018188CTST, 38VT020188CTST

Sound pressure level [dB(A)]	Cooling
	61.0

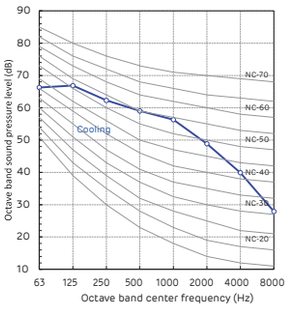

38VT022188CTST, 38VT024188CTST

Sound pressure level [dB(A)]	Cooling
	63.0

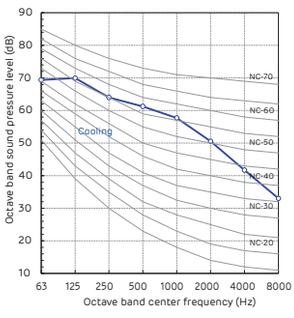

38VT026188CTST

Sound pressure level [dB(A)]	Cooling
	66.0

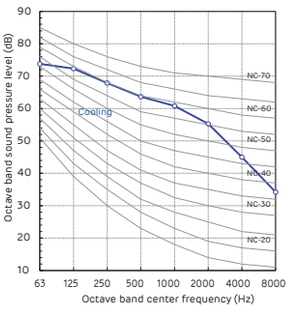

102_Carrier- Thailand XCT8 Brochure_25-01-2024.indd 14 25/01/24 9:16 PM

Night Mode Sound Pressure Levels

Sound reduction and approximation capacity (for reference)

Type	Night operation sound reduction dB(A)	Cooling capacity
801	50	85%
1001	50	70%
1201	50	60%
1401	50	60%
14A1	53	70%
1601	53	70%
1801	54	65%
2001	54	60%
2201	52	55%
2401	53	55%
2601	53	55%

Cooling conditions: Indoor temperature 27.0°DB, 19.0°WB, Outdoor temperature 25.0°DB.

	Name	Model name	Capacity	Appearance	Remarks
Branching joints and headers	Y-shape branching joint	RBM-BY55E	Under 6.4HP		
		RBM-BY105E	From 6.4 to 14.2HP		
		RBM-BY205E	From 14.2 to 25.2HP		
		RBM-BY305E	From 25.2 to 61.2HP		
		RBM-BY405E	61.2HP or more		
	4-branching header	RBM-HY1043E	Under 14.2HP		
		RBM-HY2043E	From 14.2 to 25.2HP		
	8-branching header	RBM-HY1083E	Under 14.2HP		
		RBM-HY2083E	From 14.2 to 25.2HP		
	Branching joint for outdoor unit connections	RBM-BT14E	Under 26HP	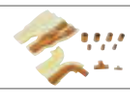	
		RBM-BT24E	From 26HP to 62HP		
		RBM-BT34E	62HP or more		
Optional PCB of outoor unit	Power peak-cut control board	TCB-PCDM4E			• Limits or stops the outdoor unit's capacity at 85%, 75%, 70% or 60% capacity • Dry contact
	External master On/Off control board	TCB-PCMO4E			• Dry contact
	Output control board	TCB-PCIN4E			• Operation indicator is switched on during any indoor unit operations in the system • Error indicator is switched on when error occurs in even indoor or outdoor unit in the system • Dry contact

102_Carrier- Thailand XCT8 Brochure_25-01-2024.indd 15 25/01/24 9:16 PM

INDOOR UNIT FEATURES

GET THE POWER OF THE INDUSTRY'S HIGHEST IDU CONNECTIONS

LARGE INDOOR UNIT LINEUP

XCT8's wide range of indoor units provide enhanced design flexibility, ensuring efficiency in installing the perfect system with lowered costs.

- 10 different types of indoor units
- Capacity from 0.8HP to 20HP
- For cooling and fresh air production

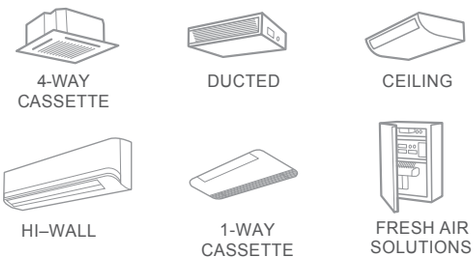

SUPERIOR AIR COMFORT

Cool comfort with Soft Cooling Mode

The Soft Cooling Mode provides a new level of cooling that personalizes airflow intensity, angle and direction directly from the remote control. Now, enjoy the indoor environment at the right temperature without any exposure to the direct draft.

Specially coated IDU heat exchanger

With a specially coated heat exchanger, Carrier XCT8's IDU always provides odorless & fresh air. The coating ensures dust particles on the heat exchanger to be washed out with condensor water.

Air purifying solution

Air Purifier Kit eliminates small particles through a high-quality filter and plasma solution. The plasma solution traps mold, pollen and PM 2.5 dust particles through electrostatic force. Additionally, users are notified of the air quality in 4 color levels on the LED indicator.

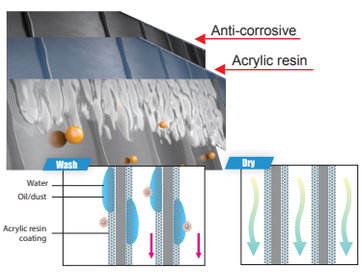

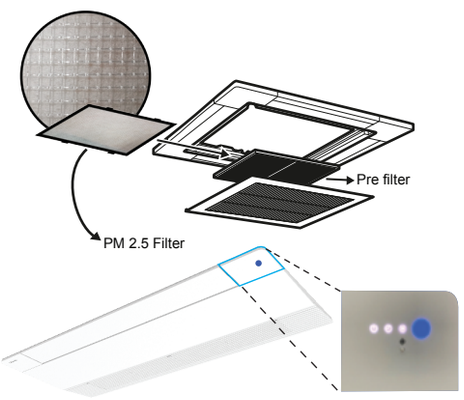

Low consumption for low operating costs

Premium comfort doesn't mean high-power consumption. With a DC motor, large air discharge surface and a resin coating system, XCT8 drastically reduces the indoor unit power consumption.

Color	Blue	Green	Yellow	Red
Air quality category	*GOOD*	*Moderate*	*Unhealthy*	*Very Unhealthy*

Example for Compact 4-Way Cassette (0.8HP)

	PCB	FAN	DRAIN	TOTAL
Low fan speed	4W	6W	3W	13W
Medium fan speed	4W	7W	3W	14W
High fan speed	4W	9W	3W	16W

102_Carrier- Thailand XCT8 Brochure_25-01-2024.indd 16 25/01/24 9:16 PM

CHOOSE YOUR ADAPTED SYSTEM SOLUTION

New Indoor Units

1-Way Cassette

Fresh Air Intake

DX Coil Interface Advance

New Air Purifier Solution

PM 2.5 Filter
4-Way Cassette

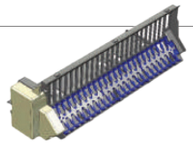

Air Purifier Kit
1-Way Cassette

Air Purifier Kit
4-Way Cassette

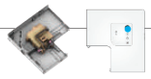

PM 2.5 Dust Sensor
Air Quality Indicator

- Blue : Air quality "Good"
- Green : Air quality "Moderate"
- Yellow : Air quality "Unhealthy"
- Red : Air quality "Very Unhealthy"

XCT8 Indoor Units

Model	(HP)	0.8	1.0	1.25	1.7	2.0	2.5	3.0	3.2	4.0	5.0	6.0	8.0	10.0	12.0	14.0	16.0	18.0	20.0
	(kW)	2.2	2.8	3.6	4.5	5.6	7.1	8.0	9.0	11.2	14.0	16.0	22.4	28.0	34.0	40.0	45.0	50.4	56.0
4-Way Cassette (High Performance) 40VU-H-8S-JEE																			
4-Way Cassette 40VU-S-8S-TST																			
Compact 4-Way Cassette 40VU-C-8S-TEE																			
1-Way Cassette 40VU-1-8S-TST																			
Slim Duct 40VD-MP8S-CEE																			
Concealed Ducted 40VD-S-8S-TST																			
Concealed Ducted (High Static Pressure) 40VD-H-8S-TST																			
Fresh Air Intake 40VD-A-8S-TST																			
Ceiling 40VC-S-8S3TST																			
Hi-Wall 40VK-S-8S-TST																			
DX Coil Interface Advance 40VAM-C8FATEE & 40VA-V8-ATEE																			

Model	Airflow (m^3/h)	150	250	350	500	650	800	1000	1500	2000
Air-to-Air Heat Exchanger*1 VN-U-SY-E										

New chassis

- Red indicates models with the new chassis.
  This model only supports old communication protocol. Please contact your local distributor to connect these indoor units.

102_Carrier- Thailand XCT8 Brochure_25-01-2024.indd 17 25/01/24 9:16 PM

GET THE **POWER OF IMPROVED AIR QUALITY**

PARTICLE SIZE OF PM 2.5

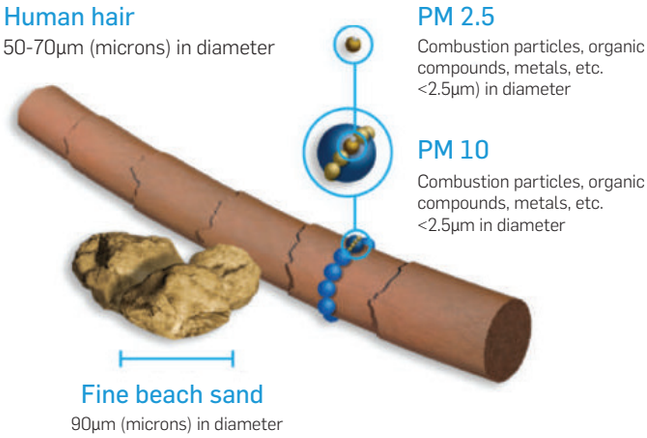

IMPACT ON...

Impact on air conditioner

Accumulation of dust particles on heat exchanger lowers the overall efficiency of the air conditioner and its air volume. It results in poor indoor air quality and impacts the health of occupants, while also reducing the life span of the air conditioner.

Impact on human health

PM 2.5 particles pose a severe risk of entering the respiratory tract, with some particles even entering the bloodstream and causing severe harm to health.

Human Health

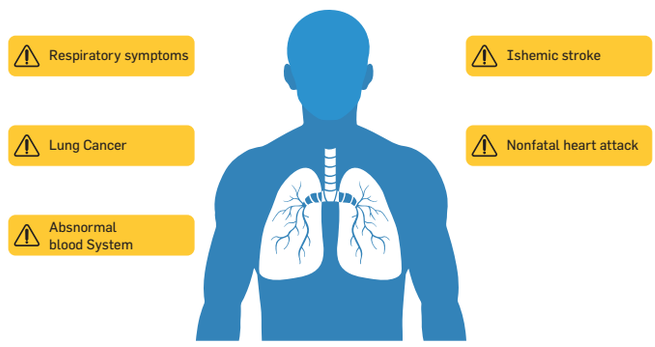

SOLUTION TO...

Solution to ensure the IDU heat exchanger stays clean

The acrylic-resin-coated heat exchanger ensures the dust particles on the fin are washed out along with the drain water. This always keeps the heat exchanger clean, while delivering exceptional cooling performance.

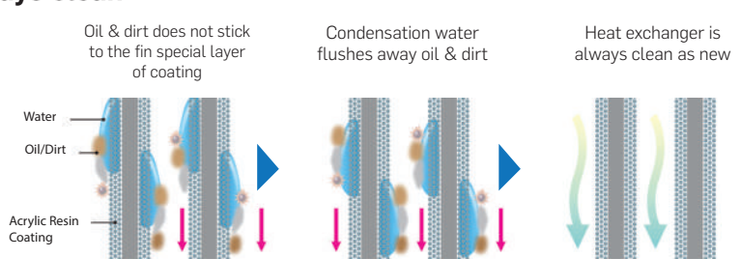

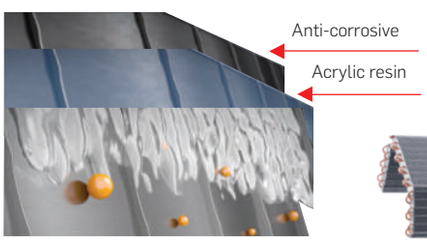

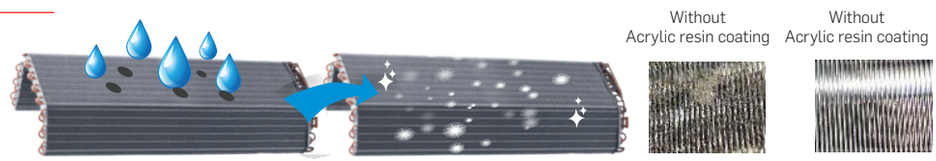

102_Carrier- Thailand XCT8 Brochure_25-01-2024.indd 18 25/01/24 9:16 PM

INDOOR AIR QUALITY SOLUTION

CLEAN INDOOR AIR MADE POSSIBLE

NEW

PM 2.5 Filter (4-Way Cassette)

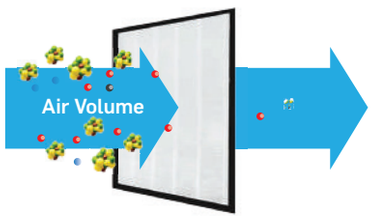

Air purifier performance	Satisfactory
Air volume	Satisfactory

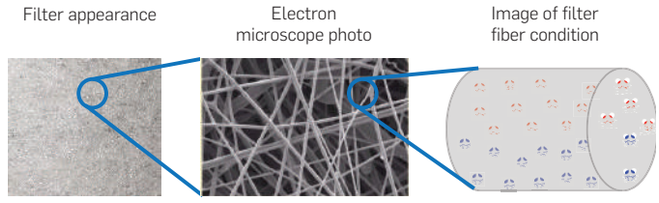

PM 2.5 Filter has an electrostatic solution that captures particles by electrostatic force. This achieves effective filtration despite having a thinner filter.

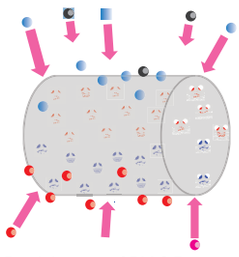

Particle type of PM 2.5

- Uncharged particle
- Negative charged particle
- Positive charged particle

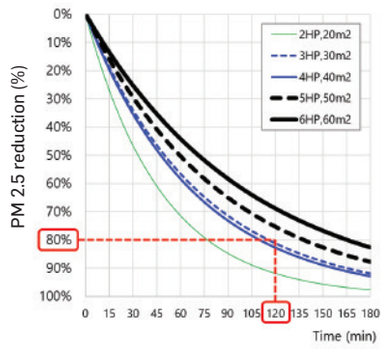

NEW

Plasma Air Purifier (1-Way Cassette and 4-Way Cassette)

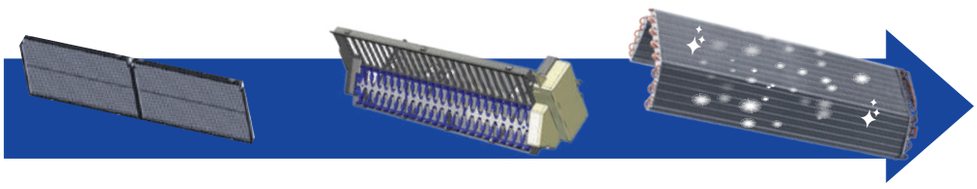

Pre filter
Pre filter captures the large dust particles

Plasma Air Purifier

Resin-Coated Heat Exchanger
The special coating on the heat exchanger ensures pollutants do not accumulate and get drained out with condensation water

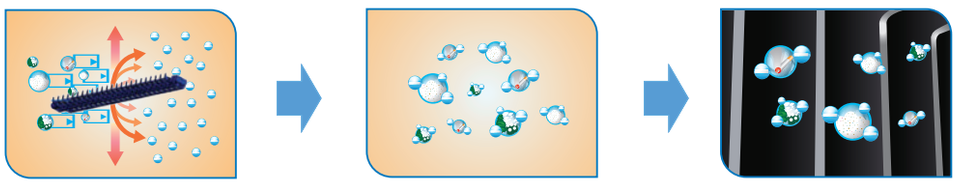

Plasma ionizer forces impurities to adopt a negative electrical charge

Pollutants become negatively charged

Negatively charged pollutants get attracted towards the heat exchanger

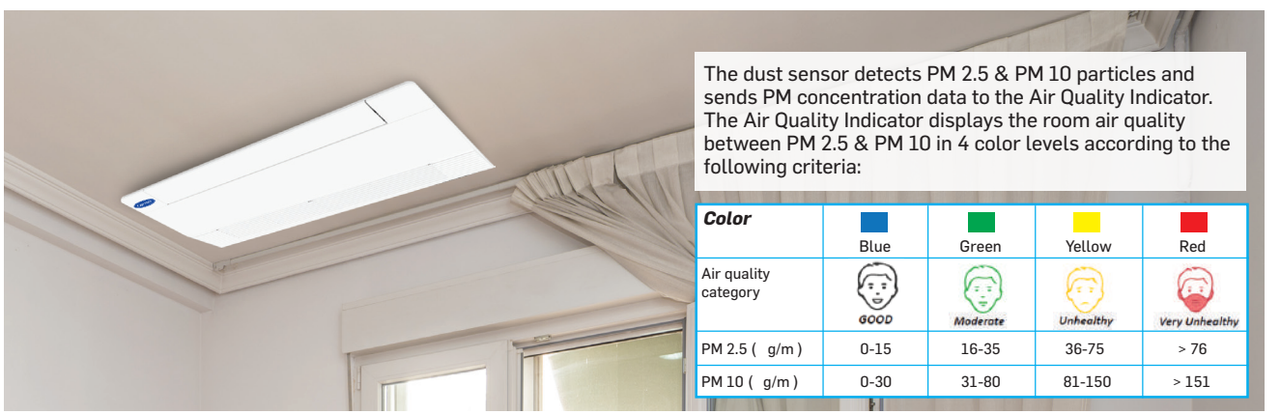

The dust sensor detects PM 2.5 & PM 10 particles and sends PM concentration data to the Air Quality Indicator. The Air Quality Indicator displays the room air quality between PM 2.5 & PM 10 in 4 color levels according to the following criteria:

Color	Blue	Green	Yellow	Red
Air quality category	GOOD	Moderate	Unhealthy	Very Unhealthy
PM 2.5 (g/m)	0-15	16-35	36-75	> 76
PM 10 (g/m)	0-30	31-80	81-150	> 151

IDU

102_Carrier- Thailand XCT8 Brochure_25-01-2024.indd 19 25/01/24 9:17 PM

4-WAY CASSETTE (HIGH PERFORMANCE)

40VU-H-8S-JEE

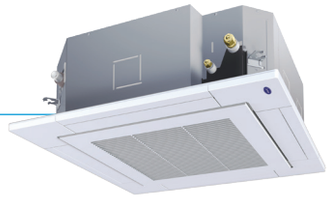

CASSETTE

The highly-efficient 4-Way Cassette has a simple & elegant design that easily blends into any interior spaces. It also has a unique flap for optimal air distribution.

CAPACITY

1HP–6HP

SOUND PRESSURE LEVEL

26dB(A)

LOCAL CONTROLS

40VCI7--8-TEE

40VCW56-8-JEE

Specifications

Model name		40VU-	Standard									
			009H-8S-JEE	012H-8S-JEE	015H-8S-JEE	018H-8S-JEE	024H-8S-JEE	027H-8S-JEE	030H-8S-JEE	036H-8S-JEE	048H-8S-JEE	056H-8S-JEE
Cooling capacity		kW	2.8	3.6	4.5	5.6	7.1	8.0	9.0	11.2	14.0	16.0
Electrical characteristics	Power supply		1-phase 230V (220–240V) 50Hz/1-phase 220V (208–230V) 60Hz									
	Running current (50Hz/60Hz)	A	0.17/0.18		0.19/0.20	0.25/0.26	0.36/0.38	0.46/0.48	0.57/0.60	0.90/0.94	0.92/0.96	0.93/0.97
	Power consumption (50Hz/60Hz)	kW	0.020/0.020		0.018/0.018	0.026/0.026	0.042/0.042	0.054/0.054	0.068/0.068	0.125/0.125	0.135/0.135	0.137/0.137
	Starting current (50Hz/60Hz)	A	0.26/0.27		0.29/0.30	0.37/0.39	0.55/0.57	0.69/0.72	0.86/0.90	1.35/1.41	1.38/1.44	1.40/1.46
Appearance	Main unit		Heat-insulating material attached: Zinc hot dipping steel plate									
	Ceiling panel name		40VPU056S8S-TST (White)/40VPU056S8SBTST (Black)									
	Panel color		Gran White (Munsell 5PB9/1)									
Outer dimensions	Main unit (HxWxD)	mm	256x840x840		319x840x840							
	Ceiling panel (HxWxD)	mm	30x950x950									
Total weight	Main unit	kgs	18		25							
	Ceiling panel	kgs	5									
Heat exchanger			Finned tube									
Soundproof/Heat-insulating material			Non-flammable insulation									
Fan unit	Fan		Turbo fan									
	Standard airflow (H/M/L)	m^3/h	846/768/708		1,060/920/800	1,260/1,100/940	1,580/1,300/1,120	1,770/1,380/1,250	1,940/1,520/1,400	2,184/1,596/1,260	2,262/1,740/1,368	2,262/1,782/1,404
	Motor output	W	60		130							
Sound pressure level (H/M/L)		dB(A)	30/28/26		32/30/28	36/33/31	41/37/35	42/37/35	44/39/37	45/38/32	46/39/33	46/40/35
Sound power level		dB(A)	45		46	50	55	56	58	60	61	61
Air filter			Standard filter supplied (long-life filter)									
Controller (Optional)			Wired or infrared remote controller									
Connecting pipe	Gas side	mm	9.5	9.5	12.7	12.7	15.9	15.9	15.9	15.9	15.9	15.9
	Liquid side	mm	6.4	6.4	6.4	6.4	9.5	9.5	9.5	9.5	9.5	9.5
	Drain port (nominal diam.)	mm	25 (Polyvinyl chloride tube)									

Drawings

Unit: mm

40VU009H-8S-JEE to 40VU012H-8S-JEE
40VU009H-8S-JSS to 40VU012H-8S-JSS

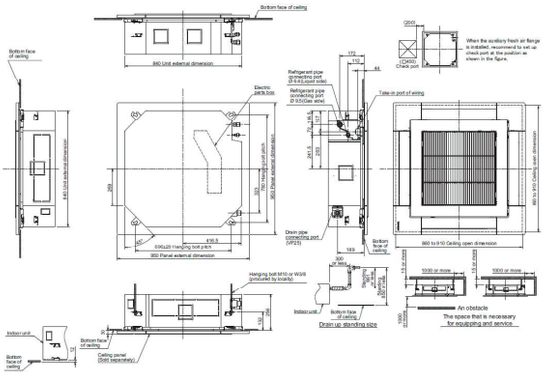

40VU015H-8S-JEE to 40VU056H-8S-JEE

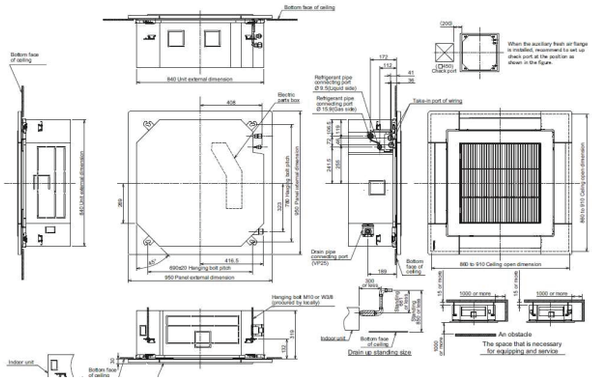

102_Carrier- Thailand XCT8 Brochure_25-01-2024.indd 20 25/01/24 9:17 PM

4-WAY CASSETTE (HIGH PERFORMANCE)

IDU

Accessories

No.	Part name	Model name	Applied model	Notes	Remarks
1	Ceiling panel	40VPU056S8S-TST	40VU-H-8S-JEE	Required accessory; white color	
2	Ceiling panel	40VPU056S8SBTST		Required accessory; black color	
3	Wireless remote controller	40VCI7--8-TEE		For installing on panel; white color	
4	Wireless remote controller	40VCI7-B8-TEE		For installing on panel; black color	
5	Occupancy sensor	40VSUM--S8F-TEE		White color	
6	Fresh air chamber	TCB-GFC1603UE			
7	Spacer for height adjustment	TCB-SP1603UE			
8	Air discharge direction kit	TCB-BC1603UE			

Design 4-Way panel

Design 4-Way panel

Wireless RC Kit design
4-Way (White)

Wireless RC Kit design
4-Way (Black)

4-Way Occupancy Sensor

4-Way Cassette (High Performance) Connectors

• : Available

CN32	CN60	CN61	CN70	CN73	CN80
Additional ventilation control from remote control	Operation status signal output (cooling, fan, thermo-on)	External On/Off, operation output and alarm output	Warning symbol on remote control based on signal input	Forced IDU thermo-off based on signal input	Forced IDU thermo-off and IDU lock based on signal input
•	•	•	•	•	•

102_Carrier- Thailand XCT8 Brochure_25-01-2024.indd 21 25/01/24 9:17 PM

4-WAY CASSETTE

40VU-S-8S-TST

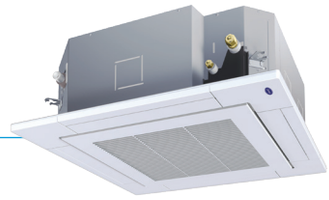

CASSETTE

The Carrier 4-Way Cassette delivers user comfort with its uniform air distribution.
This makes it ideal for small commercial applications.

CAPACITY

1HP–6HP

SOUND PRESSURE LEVEL

27dB(A)

LOCAL CONTROLS

40VCI7--8-TEE

40VCW56-8-JEE

Specifications

Model name		40VU	009S-8S-TST	012S-8S-TST	015S-8S-TST	018S-8S-TST	024S-8S-TST	027S-8S-TST	030S-8S-TST	036S-8S-TST	048S-8S-TST	056S-8S-TST
Cooling capacity		kW	2.8	3.6	4.5	5.6	7.1	8.0	9.0	11.2	14.0	16.0
		BTU (*1.2)	9,600	12,300	15,400	19,100	24,200	27,300	30,700	38,200	47,800	54,600
		BTU (*1.3)	9,700	12,400	15,600	19,300	24,500	27,600	31,000	38,600	48,400	55,300
Electrical characteristics	Power supply		1-phase 230V (220–240V) 50Hz/1-phase 220V (208–230V) 60Hz									
	Running current (50Hz/60Hz)	A	0.23/0.24		0.28/0.29	0.29/0.30	0.38/0.40	0.38/0.39	0.43/0.45	0.73/0.76	0.88/0.92	
	Power consumption (50Hz/60Hz)	kW	0.021/0.021		0.023/0.023	0.026/0.026	0.036/0.036		0.043/0.043	0.088/0.088	0.112/0.112	
	Starting current (50Hz/60Hz)	A	0.30/0.30		0.33/0.33	0.36/0.36	0.42/0.42		0.59/0.59	0.87/0.87	1.23/1.23	1.26/1.26
Appearance	Main unit		Heat-insulating material attached: Zinc hot dipping steel plate									
	Ceiling panel name		Smart panel: 40VPU056S8S-TST (White panel)/40VPU056S8SBTST (Black panel)									
	Panel color		Smart panel: Gran White (Munsell 5PB9/1)									
Outer dimensions	Main unit (HxWxD)	mm	256x840x840							319x840x840		
	Ceiling panel (HxWxD)	mm	30x950x950									
Total weight	Main unit	kgs	18		20					25		
	Ceiling panel	kgs	4									
Soundproof/Heat-insulating material			Non-flammable insulation									
Fan unit	Fan		Turbo fan									
	Standard airflow (H/M/L)	m^3/h	800/730/680		930/830/790	1,050/920/800	1,290/920/800		1,320/1,100/850	1,970/1,430/1,070	2,130/1,430/1,130	2,130/1,520/1,230
	Motor output	W	14				20			68	72	
Sound pressure level (H/M/L)		dB(A)	30/29/27		31/29/27	32/29/27	35/31/28		38/33/30	43/38/32	46/38/33	46/40/33
Sound power level		dB(A)	45		46	47	50		53	58	61	61
Air filter			Standard filter supplied (long-life filter)									
Connecting pipe	Gas side	mm	9.5	9.5	12.7	12.7	15.9	15.9	15.9	15.9	15.9	15.9
	Liquid side	mm	6.4	6.4	6.4	6.4	9.5	9.5	9.5	9.5	9.5	9.5
	Drain port (nominal dia)	mm	25 (Polyvinyl chloride tube)									

Notes:
(*1) Cooling capacities are measured under conditions specified by JIS B 8615 based on reference piping.
(*1.1) Reference piping consists of 5m main piping and 2.5m branch piping connected with a height of 0m.
(*1.2) Indoor air temperature 27.0°C DB/19.0°C WB, Outdoor air temperature 35.0°C DB.
(*1.3) Indoor air temperature 27.0°C DB/19.5°C WB, Outdoor air temperature 35.0°C DB.

Unit: mm

Drawings

40VPU056S7S-TST

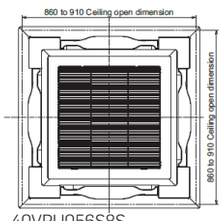

40VPU056S8S

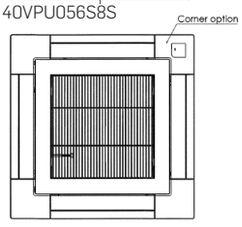

40VU009S-8S-TST to 40VU030S-8S-TST

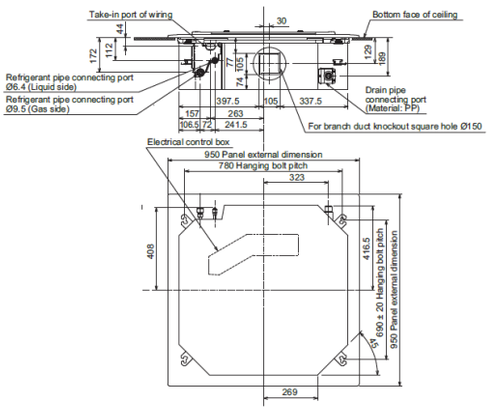

40VU036S-8S-TST to 40VU056S-8S-TST

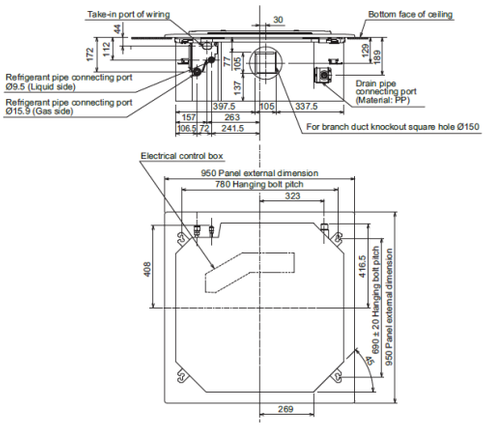

102_Carrier- Thailand XCT8 Brochure_25-01-2024.indd 22 25/01/24 9:17 PM

4-WAY CASSETTE

IDU

Accessories

No.	Part name	Model name	Applied model	Notes	Remarks
1	Ceiling panel	40VPU056S8S-TST	40VU-S-8S-TST	Required accessory; white color	
2	Ceiling panel	40VPU056S8SBTST		Required accessory; black color	
3	Wireless remote controller	40VCI7--8-TEE		panel; white color	
4	Wireless remote controller	40VCI7-B8-TEE		panel; black color	
5	Occupancy sensor	40VSUM--S8F-TEE		White color	
6	Air purifier/filter kit	40VBUIC-S8F-TEE		Includes ionizer, dust collector, deodorize filter and dust sensor	
7	Air purifier/filter kit	40VBUI--S8F-TEE		Includes ionizer and dust sensor	
8	PM 2.5 filter	TCB-PLFC1UPE-120		Before pre filter type	
9	PM 2.5 filter	TCB-PLFC2UPE-80		After pre filter type	Use with TCB-GFC1603UE
10	Fresh air inlet box	TCB-GB1602UE		For fresh air intake through knockout hole of fresh air and filter chamber. (diam.:100mm)	
11	Auxiliary fresh air flange	TCB-FF101URE2		For fresh air intake through knockout hole of indoor unit. (diam.:100mm)	
12	Fresh air chamber	TCB-GFC1603UE			
13	Spacer for height adjustment	TCB-SP1603UE			
14	Air discharge direction kit	TCB-BC1603UE			

Design 4-Way panel (White)

Design 4-Way panel (Black)

4-Way Occupancy Sensor

Wireless RC Kit design
4-Way (White)

Wireless RC Kit design
4-Way (Black)

Air Purifier Kit

4-Way Cassette Connectors

• : Available

CN32	CN60	CN61	CN70	CN73	CN80
Additional ventilation control from remote control	Operation status signal output (cooling, fan, thermo-on)	External On/Off, operation output and alarm output	Warning symbol on remote control based on signal input	Forced IDU thermo-off based on signal input	Forced IDU thermo-off and IDU lock based on signal input
•	TCB-PCUC2E PCB required	•	•	•	•

102_Carrier- Thailand XCT8 Brochure_25-01-2024.indd 23 25/01/24 9:17 PM

COMPACT 4-WAY CASSETTE

40VU-C-8S-TEE

CASSETTE

The Compact 4-Way Cassette is especially designed for office applications, where a compact and efficient solution is required.

CAPACITY

0.8HP–2HP

SOUND PRESSURE LEVEL

26dB(A)

LOCAL CONTROLS

40VPU018C8S-TEE

40VCW56-8-JEE

Specifications

Model name			40VU	007C-8S-TEE	009C-8S-TEE	012C-8S-TEE	015C-8S-TEE	018C-8S-TEE
Cooling capacity			kW	2.2	2.8	3.6	4.5	5.6
			BTU (*1.2)	7,500	9,600	12,300	15,400	19,100
			BTU (*1.2)	7,600	9,700	12,400	15,600	19,300
Power supply				1-phase 50Hz 230V (220–240V)				
Electrical characteristics	Running current		A	0.2	0.21	0.21	0.27	0.4
	Power consumption		kW	0.016	0.017	0.017	0.024	0.04
	Starting current		A	0.24	0.25	0.25	0.33	0.49
Appearance	Main unit			Zinc hot dipping steel plate				
	Ceiling panel	Model Name (White/Black)		40VPU018C8S-TEE/40VPU018C8SBTEE				
		Panel Color (White/Black)		Gran White (Munsell 5PB9/1)/Black 3 C				
Outer dimensions	Main unit (HxWxD)		mm	256x575x575				
	Ceiling panel		mm	12x620x620				
Total weight	Main unit		kgs	16				
	Ceiling panel		kgs	2.5				
Heat exchanger				Finned tube				
Soundproof/Heat-insulating material				Non-flammable insulation				
Fan unit	Fan			Turbo fan				
	Airflow (H/M/L)		m^3/h	450/380/300	470/390/300	470/410/340	590/490/395	760/630/490
	Motor output		W	60				
Air filter				Standard filter (long-life filter)				
Controller			(*2)	Remote controller				
Connecting pipe	Gas side		mm	Ø 9.5			Ø 12.7	
	Liquid side		mm	Ø 6.4				
Drain port (Nominal dia. mm)			mm	VP20 (Polyvinyl chloride tube)				
Sound pressure level (H/M/L)			dB(A)	32/29/26	33/30/26	33/30/27	37/33/29	43/38/33

Notes:
(*1) Cooling capacities are measured under conditions specified by JIS B 8615 based on reference piping.
(*1.1) Reference piping consists of 5m main piping and 2.5m branch piping connected with a height of 0m.
(*1.2) Indoor air temperature 27.0°C DB/19.0°C WB, Outdoor air temperature 35.0°C DB.
(*1.3) Indoor air temperature 27.0°C DB/19.5°C WB, Outdoor air temperature 35.0°C DB.

102_Carrier- Thailand XCT8 Brochure_25-01-2024.indd 24 25/01/24 9:17 PM

COMPACT 4-WAY CASSETTE

IDU

Drawings

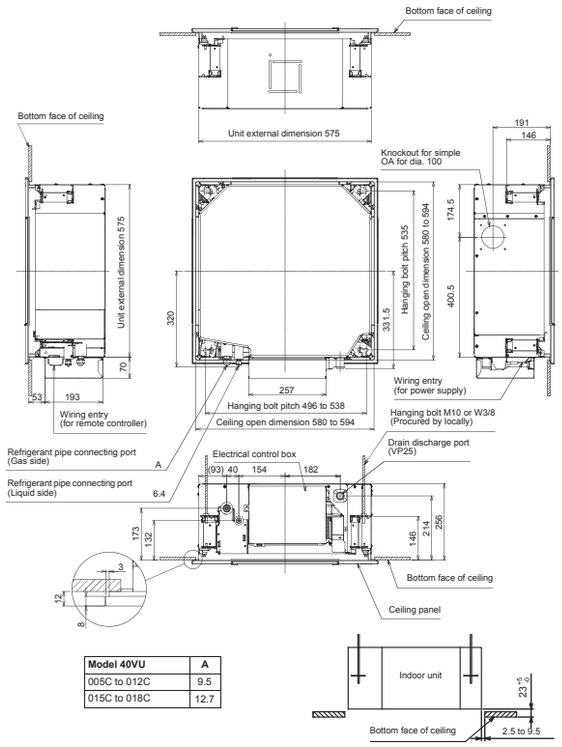

Model 40VU	A
005C to 012C	9.5
015C to 018C	12.7

Unit: mm

Accessories

No.	Part name	Model name	Applied model	Notes	Remarks
1	Ceiling panel	40VPU018C8S-TEE	40VU-C-8S-TEE	Required accessory; white color	
2	Ceiling panel	40VPU018C8SBTEE		Required accessory; black color	
3	Occupancy sensor	40VSUM--C8F-TEE			
4	Wireless remote controller	40VCI8--8-TEE		For installing on panel; white color	
5	Wireless remote controller	40VCI8-B8-TEE		For installing on panel; black color	
6	Wired remote control	40VCW56-8-JEE		White color	

Design 4-Way panel (White)

Design 4-Way panel (Black)

4-Way Occupancy Sensor

Wireless RC Kit design 4-Way (White)

Wireless RC Kit design 4-Way (Black)

Simple Wired RC

Wired RC

Compact 4-Way Cassette Connectors

• : Available

CN32	CN60	CN61	CN70	CN73	CN80
Additional ventilation control from remote control	Operation status signal output (cooling, fan, thermo-on)	External On/Off, operation output and alarm output	Warning symbol on remote control based on signal input	Forced IDU thermo-off based on signal input	Forced IDU thermo-off and IDU lock based on signal input
•	TCB-PCUC2E PCB required	•	TCB-PCUC2E PCB required	TCB-PCUC2E PCB required	TCB-PCUC2E PCB required

102_Carrier- Thailand XCT8 Brochure_25-01-2024.indd 25 25/01/24 9:17 PM

1-WAY CASSETTE

40VU-1-8S-TST

CASSETTE

Carrier's slim 1-Way Cassette is an innovative, easy-to-install solution best suited for small areas such as hotels, offices and lobbies.

CAPACITY

0.8HP–3.0HP

SOUND PRESSURE LEVEL

25dB(A)

LOCAL CONTROLS

40VCI1--8-TEE

40VCW56-8-JEE

Specifications

Model name		40VU	0071-8S-TST	0091-8S-TST	0121-8S-TST	0151-8S-TST	0181-8S-TST	0241-8S-TST	0271-8S-TST
Cooling capacity		kW	2.2	2.8	3.6	4.5	5.6	7.1	8.0
		BTU(*1.2)	7,500	9,600	12,300	15,400	19,100	24,200	27,300
		BTU(*1.3)	7,600	9,700	12,400	15,600	19,300	24,500	27,600
Electrical characteristics	Power supply		1-phase 230V (220–240V) 50Hz/1-phase 220V (208–230V) 60Hz						
	Running current (50Hz/60Hz)	A	0.17/0.18	0.18/0.19	0.19/0.20	0.24/0.25	0.26/0.27	0.34/0.36	0.41/0.43
	Power consumption (50Hz/60Hz)	kW	0.017/0.017	0.018/0.018	0.019/0.019	0.025/0.025	0.027/0.027	0.042/0.042	0.050/0.050
	Starting current (50Hz/60Hz)	A	0.43/0.43	0.43/0.43	0.43/0.43	0.28/0.28	0.30/0.30	0.38/0.38	0.45/0.45
Appearance	Main unit		Heat-insulating material attached: Zinc hot dipping steel plate						
	Ceiling panel name		40VPU01218S-TST			40VPU02718S-TST			
	Panel color		Moon White (Munsell 2.5GY9.0/0.5)						
Outer dimensions	Main unit (HxWxD)	mm	150x990x450			150x1,180x450			
	Ceiling panel (HxWxD)	mm	30x1,220x530			30x1,410x530			
Total weight	Main unit	kgs	14			15		16	
	Ceiling panel	kgs	4			5			
Soundproof/Heat-insulating material			Non-flammable insulation						
Fan unit	Fan		Centrifugal fan						
	Standard airflow (H/M/L)	m³/h	500/390/270	520/410/290	540/420/290	750/630/500	800/650/500	940/760/600	1,000/860/720
	Motor output	W	30			42		59	
Sound pressure level (H/M/L)		dB(A)	38/34/25	39/35/26	40/36/26	39/36/33	40/37/33	46/42/37	47/44/41
Sound power level		dB(A)	53	54	55				
Air filter			Standard filter supplied (long-life filter)/Optional air purifier available						
Connecting pipe	Gas side	mm	9.5	9.5	9.5	12.7	12.7	15.9	15.9
	Liquid side	mm	6.4	6.4	6.4	6.4	6.4	9.5	9.5
	Drain port (nominal diam.)	mm	25 (Polyvinyl chloride tube)						

Notes:
(*1) Cooling capacities are measured under conditions specified by JIS B 8615 based on reference piping.
(*1.1) Reference piping consists of 5m main piping and 2.5m branch piping connected with a height of 0m.
(*1.2) Indoor air temperature 27.0˚C DB/19.0˚C WB, Outdoor air temperature 35.0˚C DB.
(*1.3) Indoor air temperature 27.0˚C DB/19.5˚C WB, Outdoor air temperature 35.0˚C DB.

Drawings

Unit: mm

40VU0071-8S-TST to 40VU0121-8S-TST

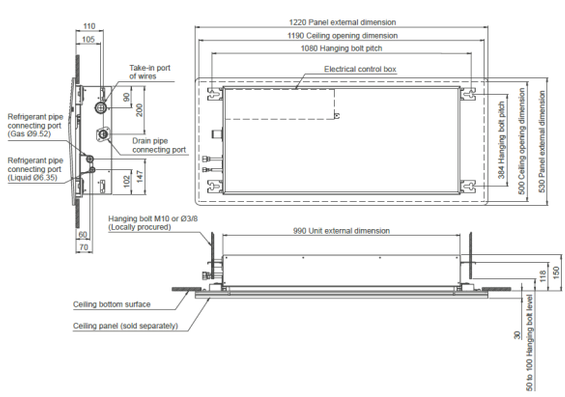

40VU0151-8S-TST to 40VU0271-8S-TST

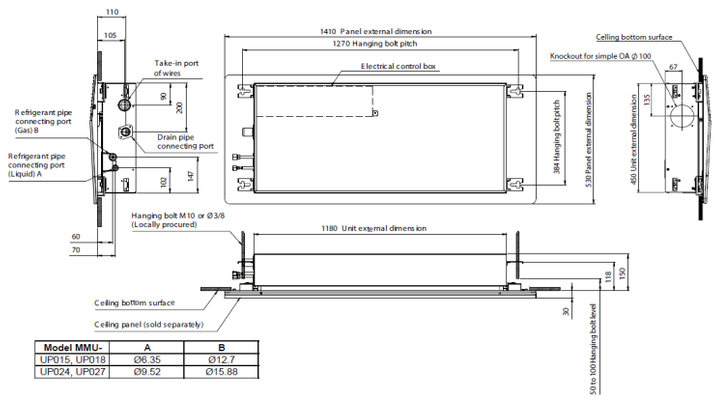

Model MMU-	A	B
UP015, UP018	Ø6.35	Ø12.7
UP024, UP027	Ø9.52	Ø15.88

102_Carrier- Thailand XCT8 Brochure_25-01-2024.indd 26 25/01/24 9:17 PM

1-WAY CASSETTE

Accessories

No.	Part name	Model name	Applied model	Notes	Remarks
1	Ceiling panel	40VU01218S-TST	40VU0071 to 0121-8S-TST	Required accessory	
2	Ceiling panel	40VU02718S-TST	40VU0151 to 0271-8S-TST	Required accessory	
3	Auxiliary fresh air flange	TCB-FF101URE2	40VU0151 to 0271-8S-TST	For fresh air intake through knockout hole of indoor unit (diam.:100mm)	
4	Air purifier kit	40VBUP--18F-TEE	40VU-1-8S-TST		
5	Occupancy sensor	40VSUM--18F-TEE			
6	Wireless remote controller	40VCI1--8-TEE		For installing on panel	

1-Way Panel

1-Way Wireless RC Kit

1-Way Occupancy Kit

1-Way Air Purifier Kit

1-Way Cassette Connectors

• : Available

CN32	CN60	CN61	CN70	CN73	CN80
Additional ventilation control from remote control	Operation status signal output (cooling, fan, thermo-on)	External On/Off, operation output and alarm output	Warning symbol on remote control based on signal input	Forced IDU thermo-off based on signal input	Forced IDU thermo-off and IDU lock based on signal input
•	TCB-PCUC2E PCB required	•	TCB-PCUC2E PCB required	TCB-PCUC2E PCB required	TCB-PCUC2E PCB required

102_Carrier- Thailand XCT8 Brochure_25-01-2024.indd 27 25/01/24 9:17 PM

SLIM DUCT

40VD-MP8S-CEE

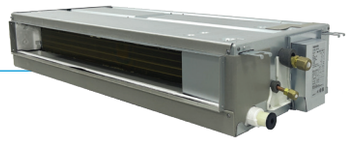

DUCT

Designed for easy installation, exceptional energy saving and high performance, the Carrier Slim Duct can be installed in a ceiling void or a false ceiling.

CAPACITY

0.8HP–3.0HP

SOUND PRESSURE LEVEL

26dB(A)

LOCAL CONTROLS

40VCI0--8-TEE

40VCW56-8-JEE

Specifications

Model name		40VD	007MP8S-CEE	009MP8S-CEE	012MP8S-CEE	015MP8S-CEE	018MP8S-CEE	024MP8S-CEE	027MP8S-CEE
Cooling capacity		kW	2.2	2.8	3.6	4.5	5.6	7.1	8.0
		BTU(*1.2)	7,500	9,600	12,300	15,400	19,100	24,200	27,300
		BTU(*1.3)	7,600	9,700	12,400	15,600	19,300	24,500	27,600
Electrical characteristics	Power supply		1-phase 50Hz 220–240V/1-phase 60Hz 208–230V						
	Running current (50Hz/60Hz)	A	0.40/0.42	0.42/0.44	0.44/0.46	0.47/0.49	0.53/0.56	0.69/0.73	0.74/0.78
	Power consumption (50Hz/60Hz)	kW	0.026/0.026	0.029/0.029	0.031/0.031	0.035/0.035	0.044/0.044	0.067/0.067	0.072/0.072
	Starting current (50Hz/60Hz)	A	0.69/0.73	0.73/0.77	0.77/0.81	0.82/0.86	0.92/0.97	1.21/1.27	1.30/1.36
Appearance			Heat-insulating material attached: Zinc hot dipping steel plate						
Outer dimensions	(HxWxD)	mm	210x700x450			210x900x450		210x1110x450	
Total weight		kgs	15			19		22	
Soundproof/Heat-insulating material			Polyethylene foam & Polyurethane foam						
Fan unit	Fan		Centrifugal fan (Sirocco fan)						
	Standard airflow (H/M/L)	m³/h	540/460/400	570/500/420	600/520/440	690/640/550	780/730/650	1,080/950/860	1,140/980/910
	Motor output	W	50			94			
	External static pressure (Factory setting)	Pa	10						
	External static pressure	Pa	10-20-30-40-50 (5 Steps)						
Sound pressure level (H/M/L)	Under air intake	dB(A)	41/39/35	42/40/36	44/40/37	42/39/37	44/42/39	47/44/41	48/45/43
	Back air intake	dB(A)	31/29/26	32/29/26	33/30/27	33/30/28	34/32/29	36/33/30	37/34/32
Sound power level		dB(A)	52	54	54	52	56	60	61
Air filter			Standard filter supplied (long-life filter)						
Connecting pipe	Gas side	mm	9.5	9.5	9.5	12.7	12.7	15.9	15.9
	Liquid side	mm	6.4	6.4	6.4	6.4	6.4	9.5	9.5
	Drain port (nominal diam.)	mm	25 (Polyvinyl chloride tube: External diam. 32mm, Internal diam. 25mm)						

Notes:
(*1) Cooling capacities are measured under conditions specified by JIS B 8615 based on reference piping.
(*1.1) Reference piping consists of 5m main piping and 2.5m branch piping connected with a height of 0m.
(*1.2) Indoor air temperature 27.0°C DB/19.0°C WB, Outdoor air temperature 35.0°C DB.
(*1.3) Indoor air temperature 27.0°C DB/19.5°C WB, Outdoor air temperature 35.0°C DB.

Drawings

40VD007MP8S-CEE to 40VD027MP8S-CEE

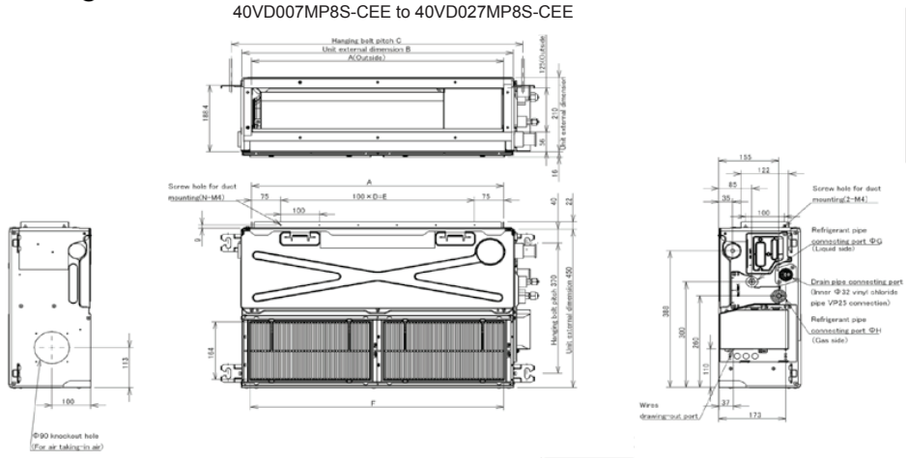

Unit: mm

40VD***MP8S-CEE	007–012	015–018	024–027
A	650	850	1,050
B	700	900	1,100
C	770	970	1,170
D	5	7	9
E	500	700	900
F	655	855	1,055
G	6.4		9.5
H	9.5	12.7	15.9

102_Carrier- Thailand XCT8 Brochure_25-01-2024.indd 28 25/01/24 9:17 PM

SLIM DUCT

IDU

Accessories

No.	Part name	Model name	Applied model	Notes
1	Auxiliary fresh air flange	TCB-FF101URE2	40VD-MP8S-CEE	For fresh air intake through knockout hole of indoor unit (diam.:100mm)
2	Wireless remote controller	40VCI0--8-TEE		For installing as stand-alone

• : Available

Slim Duct Connectors

CN32	CN60	CN61	CN70	CN73	CN80
Additional ventilation control from remote control	Operation status signal output (cooling, fan, thermo-on)	External On/Off, operation output and alarm output	Warning symbol on remote control based on signal input	Forced IDU thermo-off based on signal input	Forced IDU thermo-off and IDU lock based on signal input
•	TCB-PCUC2E PCB required	•	TCB-PCUC2E PCB required	TCB-PCUC2E PCB required	TCB-PCUC2E PCB required

Installation Flexibility

Change from under air intake to back air intake

Under air intake

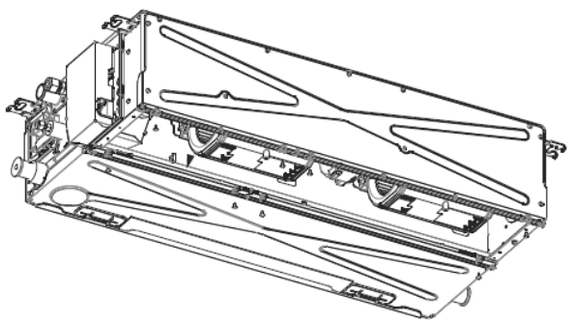

Back air intake

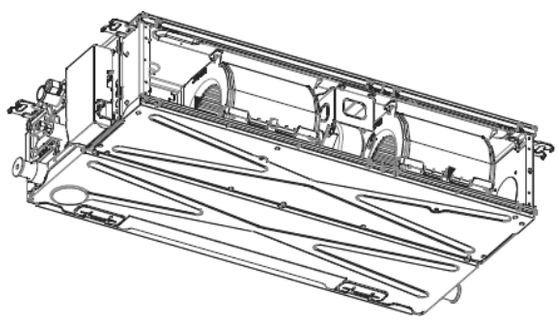

102_Carrier- Thailand XCT8 Brochure_25-01-2024.indd 29 25/01/24 9:17 PM

CONCEALED DUCTED

40VD-S-8S-TST

DUCT

Be it any room shape, the flexible Concealed Ducted model ensures a uniform temperature and optimal air distribution for comfort of the user.

CAPACITY

0.8HP–6HP

SOUND PRESSURE LEVEL

23dB(A)

LOCAL CONTROLS

40VCI0--8-TEE

40VCW56-8-JEE

Specifications

Model name		40VD	007S-8S-TST	009S-8S-TST	012S-8S-TST	015S-8S-TST	018S-8S-TST	024S-8S-TST	027S-8S-TST	030S-8S-TST	036S-8S-TST	048S-8S-TST	056S-8S-TST
Cooling capacity		kW	2.2	2.8	3.6	4.5	5.6	7.1	8.0	9.0	11.2	14.0	16.0
		BTU(*1.2)	7,500	9,600	12,300	15,400	19,100	24,200	27,300	30,700	38,200	47,800	54,600
		BTU(*1.3)	7,600	9,700	12,400	15,600	19,300	24,500	27,600	31,000	38,600	48,400	55,300
Electrical characteristics	Power supply		1-phase 50Hz 220–240V/1-phase 60Hz 208–230V										
	Running current (50Hz/60Hz)	A	0.35/0.36	0.38/0.40		0.70/0.72		0.80/0.83		0.95/0.98	1.29/1.33	1.70/1.70	
	Power consumption (50Hz/60Hz)	kW	0.055/0.055	0.060/0.060		0.110/0.110		0.135/0.135		0.160/0.160	0.220/0.220	0.290/0.290	
	Starting current (50Hz/60Hz)	A	0.55/0.56	0.58/0.60		1.10/1.12		1.20/1.23		1.35/1.38	2.09/2.13	2.50/2.56	
Appearance			Heat-insulating material attached: Zinc hot dipping steel plate										
Dimensions (HxWxD)		mm	275x700x750					275x1,000x750			275x1,400x750		
Total weight		kgs	23					30			40		
Soundproof/Heat-insulating material			Polyethylene foam										
Fan unit	Fan		Centrifugal fan										
	Standard airflow (H/M/L)	m^3/h	540/450/360	570/480/390		920/660/540		1,320/1,090/870		1,450/1,200/960	1,920/1,620/1,380	2,350/1,920/1,500	2,350/1,090/1,500
	Motor output	W	150								250		
	External static pressure (Factory setting)	Pa	30					40			50		
	External static pressure	Pa	30-40-50-65-80-100-150 (7 Steps)										
Sound pressure level (H/M/L)		dB(A)	29/26/23	30/26/23	30/26/23	33/29/25	33/29/25	33/30/27	33/30/27	36/31/27	36/34/31	40/36/33	40/36/33
Sound power level		dB(A)	44	45	45	48	48	48	48	51	51	55	55
Air filter			Standard filter supplied (long-life filter)										
Connecting pipe	Gas side	mm	9.5	9.5	9.5	12.7	12.7	15.9	15.9	15.9	15.9	15.9	15.9
	Liquid side	mm	6.4	6.4	6.4	6.4	6.4	9.5	9.5	9.5	9.5	9.5	9.5
	Drain port (nominal diam.)	mm	25 (Polyvinyl chloride tube)										

Notes:
(*1) Cooling capacities are measured under conditions specified by JIS B 8615 based on reference piping.
(*1.1) Reference piping consists of 5m main piping and 2.5m branch piping connected with a height of 0m.
(*1.2) Indoor air temperature 27.0°C DB/19.0°C WB, Outdoor air temperature 35.0°C DB.
(*1.3) Indoor air temperature 27.0°C DB/19.5°C WB, Outdoor air temperature 35.0°C DB.

Unit: mm

Drawings

40VD007S-8S-TST to 40VD018S-8S-TST

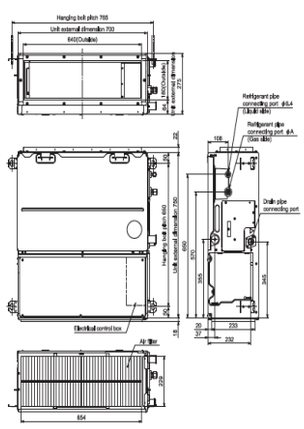

40VD024S-8S-TST to 40VD030S-8S-TST

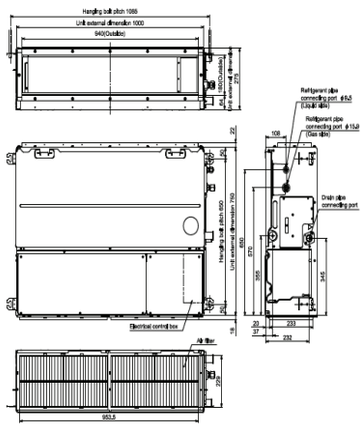

40VD036S-8S-TST to 40VD056S-8S-TST

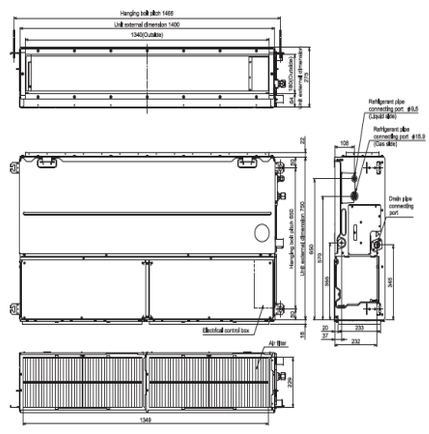

102_Carrier- Thailand XCT8 Brochure_25-01-2024.indd 30 25/01/24 9:17 PM

CONCEALED DUCTED

IDU

Accessories

No.	Part name	Model name	Applied model	Appearance	Notes
1	Spigot-shaped flange	TCB-SF56C6BPE	40VD007 to 018S-8S-TST		263x694x175mm/Spigot diameter: 200mm
2	Spigot-shaped flange	TCB-SF80C6BPE	40VD024 to 030S-8S-TST		263x994x175mm/Spigot diameter: 200mm
3	Spigot-shaped flange	TCB-SF160C6BPE	40VD036 to 056S-8S-TST		263x1394x175mm/Spigot diameter: 200mm
4	Wireless remote controller	40VCI0--8-TEE	40VD-S-8S-TST		For installing as stand-alone

Concealed Ducted Connectors

• : Available

CN32	CN60	CN61	CN70	CN73	CN80
Additional ventilation control from remote control	Operation status signal output (cooling, fan, thermo-on)	External On/Off, operation output and alarm output	Warning symbol on remote control based on signal input	Forced IDU thermo-off based on signal input	Forced IDU thermo-off and IDU lock based on signal input
•	•	•	•	•	•

Installation Flexibility

Changing from back air intake to under air intake

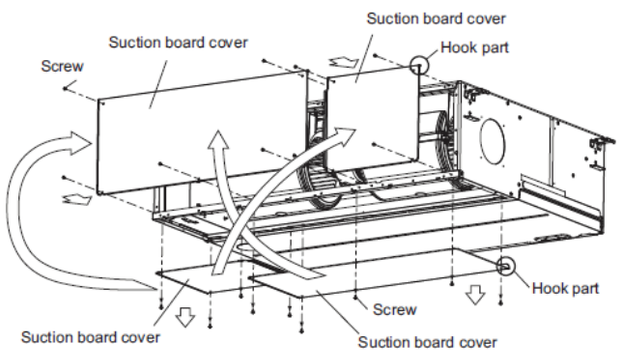

102_Carrier- Thailand XCT8 Brochure_25-01-2024.indd 31 25/01/24 9:17 PM

CONCEALED DUCTED (HIGH STATIC PRESSURE)

40VD-H-8S-TST

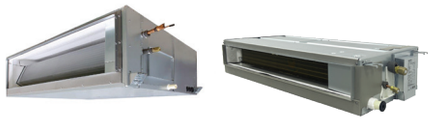

DUCT

Delivering airflows up to 4,800m³/h, this is Carrier's most powerful ducted unit with an external static pressure up to 250Pa.

CAPACITY

2HP–10HP

SOUND PRESSURE LEVEL

31dB(A)

LOCAL CONTROLS

40VCI0--8-TEE

40VCW56-8-JEE

Specifications

Model name		40VD	018H-8S-TST	024H-8S-TST	027H-8S-TST	036H-8S-TST	048H-8S-TST	056H-8S-TST	072H-8S-TST	096H-8S-TST
Cooling capacity		kW	5.6	7.1	8.0	11.2	14.0	16.0	22.4	28.0
		BTU(*1.2)	19,100	24,200	27,300	38,200	47,800	54,600	76,400	95,500
		BTU(*1.3)	19,300	24,500	27,600	38,600	48,400	55,300	77,300	96,700
Electrical characteristics	Power supply		1-phase 50Hz 220–240V/1-phase 60Hz 208–230V							
	Running current (50Hz/60Hz)	A	0.82/0.85	0.92/0.95	1.16/1.20	1.39/1.43	1.81/1.86	2.48/2.57	2.83/2.93	3.77/3.92
	Power consumption (50Hz/60Hz)	kW	0.125/0.125	0.140/0.140	0.190/0.190	0.230/0.230	0.300/0.300	0.400/0.400	0.540/0.540	0.790/0.790
	Starting current (50Hz/60Hz)	A	1.12/1.15	1.22/1.25	1.46/1.50	1.89/1.93	2.41/2.46	3.08/3.17	7.80/8.15	7.80/8.15
Appearance			Heat-insulating material attached: Zinc hot dipping steel plate							
Dimensions (HxWxD)		mm	298x1,000x750			298x1,400x750			448x1,400x900	
Total weight		kgs	34			43			97	
Soundproof/Heat-insulating material			Polyethylene foam							
Fan unit	Fan		Centrifugal fan							
	Standard airflow (H/M/L)	m³/h	1,100/990/900	1,200/1,050/960	1,500/1,350/1200	1,920/1,560/1,340	2,340/1,980/1,695	2,760/2,340/1,920	3,800/3,200/2,500	4,800/4,200/3,500
	Motor output	W	250			350			250	
	External static pressure (Factory setting)	Pa	100						150	
	External static pressure	Pa	50-75-125-100-150-175-200 (7 Steps)						50-83-117-150-183-217-250 (7 Steps)	
Sound pressure level (H/M/L)		dB(A)	37/33/31	38/34/31	43/41/38	41/37/34	44/44/38	46/44/41	44/40/36	46/42/38
Sound power level		dB(A)	60			62	67	69	79	81
Air filter			Sold separately (TCB-LK801D-E)			Sold separately (TCB-LK1401D-E)			Sold separately (TCB-LK2801DP-E)	
Connecting pipe	Gas side	mm	12.7	15.9	15.9	15.9	15.9	15.9	22.2	22.2
	Liquid side	mm	6.4	9.5	9.5	9.5	9.5	9.5	12.7	12.7
	Drain port (nominal diam.)	mm	25 (Polyvinyl chloride tube)							

Notes:
(*1) Cooling capacities are measured under conditions specified by JIS B 8615 based on reference piping.
(*1.1) Reference piping consists of 5m main piping and 2.5m branch piping connected with a height of 0m.
(*1.2) Indoor air temperature 27.0°C DB/19.0°C WB, Outdoor air temperature 35.0°C DB.
(*1.3) Indoor air temperature 27.0°C DB/19.5°C WB, Outdoor air temperature 35.0°C DB.

Drawings

Unit: mm

40VD018H-8S-TST to 40VD056H-8S-TST

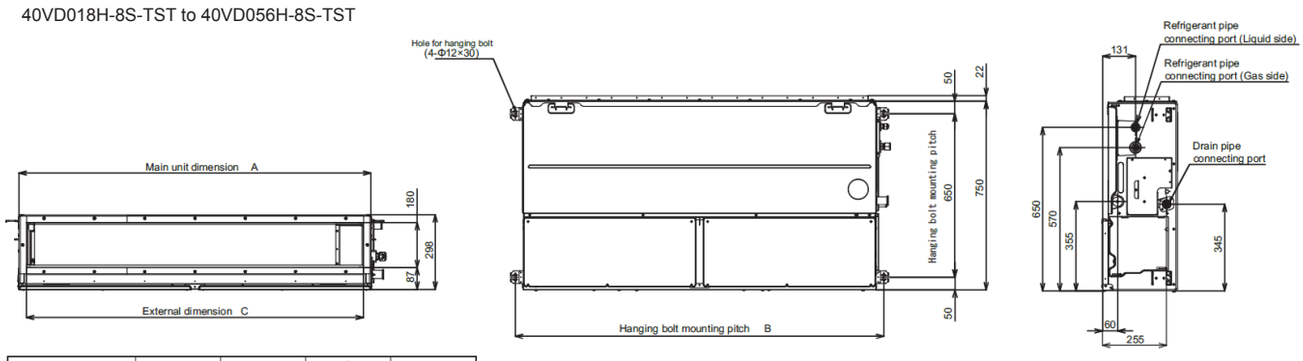

	A	B	C	D
MMD-AP0186~0276HP-E	1000	1065	940	500
MMD-AP0366~0566HP-E	1400	1465	1340	700

102_Carrier- Thailand XCT8 Brochure_25-01-2024.indd 32 25/01/24 9:18 PM

CONCEALED DUCTED (HIGH STATIC PRESSURE)

IDU

Drawings

Unit: mm

40VD072H-8S-TST & 40VD096H-8S-TST

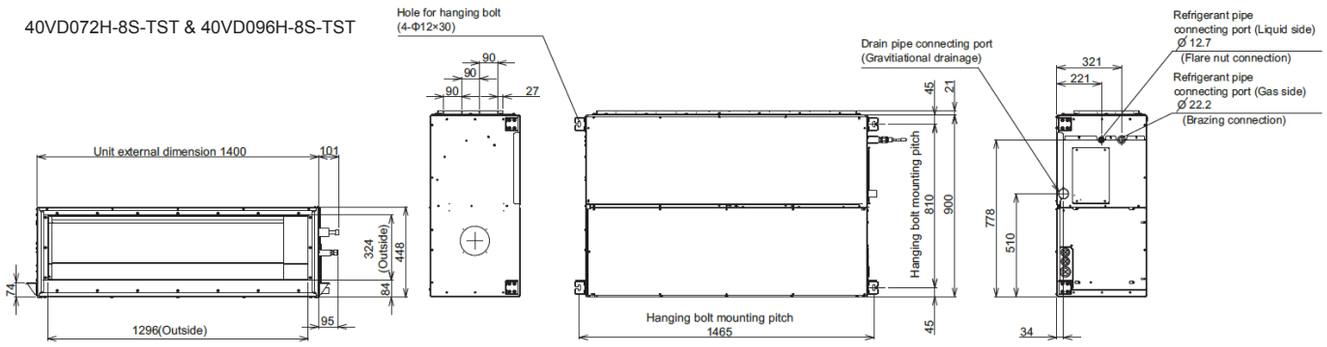

Accessories

No.	Part name	Model name	Applied model	Appearance	Notes
1	Spigot-shaped flange	TCB-SF80C6BE	40VD018 to 027H-8S-TST		263x994x175mm/Spigot diameter: 200mm
2	Spigot-shaped flange	TCB-SF160C6BE	40VD036 to 056H-8S-TST		263x1394x175mm/Spigot diameter: 200mm
3	Long-life filter kit	TCB-LK801D-E	40VD018 to 027H-8S-TST		Flange-shaped Mount chassis directly Upside-down mounting possible Left and right removable
4	Long-life filter kit	TCB-LK1401D-E	40VD036 to 056H-8S-TST		
5	Long-life filter kit	TCB-LK2801DP-E	40VD072 to 096H-8S-TST		
6	Auxiliary fresh air flange	TCB-FF151US-E	40VD018 to 056H-8S-TST		
7	Drain pump kit	TCB-DP40DPE	40VD072 to 096H-8S-TST		
8	Wireless remote controller	40VCI0--8-TEE	40VD-H-8S-TST		For installing as stand-alone

• : Available

Concealed Ducted (High Static Pressure) Connectors

	CN32	CN60	CN61	CN70	CN73	CN80
	Additional ventilation control from remote control	Operation status signal output (cooling, fan, thermo-on)	External On/Off, operation output and alarm output	Warning symbol on remote control based on signal input	Forced IDU thermo-off based on signal input	Forced IDU thermo-off and IDU lock based on signal input
Up to 6HP	•	•	•	•	•	•
8 & 10HP	•	TCB-PCUC2E PCB required	•	TCB-PCUC2E PCB required	TCB-PCUC2E PCB required	TCB-PCUC2E PCB required

102_Carrier- Thailand XCT8 Brochure_25-01-2024.indd 33 25/01/24 9:18 PM

FRESH AIR INTAKE

40VD-A-8S-TST

FRESH AIR INTAKE

This indoor unit has been specifically designed to manage and treat fresh air before its distribution into the building.

CAPACITY

2HP–10HP

AIRFLOW

Up to
1,080 m³/h–3,060m³/h

SOUND PRESSURE LEVEL

31dB(A)

LOCAL CONTROLS

40VCI0--8-TEE

40VCW56-8-JEE

Specifications

Model name			40VD	048A-8S-TST	072A-8S-TST	096A-8S-TST	112A-8S-TST	128A-8S-TST
Cooling capacity (*) (Note 1)			kW	14.0	22.4	28.0	33.5	40.0
			BTU	47,800	76,400	95,500	114,300	136,400
Electrical characteristics	Power supply			1-phase 50Hz 220–240V/1-phase 60Hz 208–230V				
	Running current (50Hz/60Hz)		A	0.77/0.80	0.86/0.90	1.07/1.12	1.30/1.36	1.83/1.91
	Power consumption (50Hz/60Hz)		kW	0.108/0.108	0.153/0.153	0.198/0.198	0.240/0.240	0.330/0.330
	Starting current (50Hz/60Hz)		A	2.01/2.10	7.80/8.15	7.80/8.15	7.80/8.15	7.80/8.15
Dimensions (HxWxD)			mm	327x1,430x750	477x1,430x900			
Total weight			kgs	44	99			
Soundproof/Heat-insulating material				Non-flammable insulation				
Fan unit	Fan			Centrifugal fan				
	Standard airflow (H/M/L)		m³/h	1,080/930/760	1,680/1,440/1,200	2,100/1,800/1,470	2,520/2,130/1,770	3,060/2,580/2,130
	Motor output		W	350	1,000			
	External static pressure (Factory setting)		Pa	100				
	External static pressure		Pa	50-75-100-125-150-175-200 (7 Steps)				
	Airflow limit	Lower limit	m³/h	600	960	1320	1500	1800
		Upper limit	m³/h	1,320	2,040	2,520	3,060	3,600
Sound pressure level (H/M/L)			dB(A)	38/35/31	38/36/33	39/36/33	40/37/34	42/38/35
Air filter				Optional or field supply				
Connecting pipe	Gas / Liquid side		mm	15.9 / 9.5	22.2 / 12.7		28.6 / 12.7	28.6 / 12.7
	Drain port (nominal diam.)		mm	25 (Polyvinyl chloride tube)				

*The setting temperature is 13.0–25.0°C (Standard IDU: 18.0–30.0°C).
Note 1 : Rated conditions
Cooling : Outdoor air temperature 33.0°C DB/28.0°C WB, setting temperature 18.0°C.
Note 2 : When supply air temperature is "setting temperature + 3.0°C" or less, Fresh Air Intake Unit operates at Fan mode.
Note 3 : When supply air temperature is "setting temperature -3.0°C" or over, Fresh Air Intake Unit operates at Fan mode.
Note 4 : 46.0-52.0°C is also available but temporarily operable.

Conditions for Use

In Cool or Fan mode, if temperature of the outdoor/suction air is under 5.0°C, the operation stops automatically to protect the equipment.

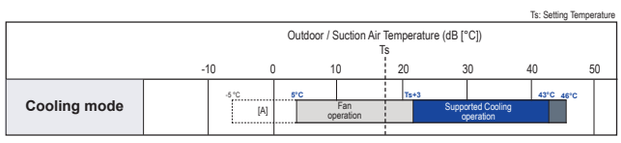

Drawings

Unit: mm

40VD048A-8S-TST

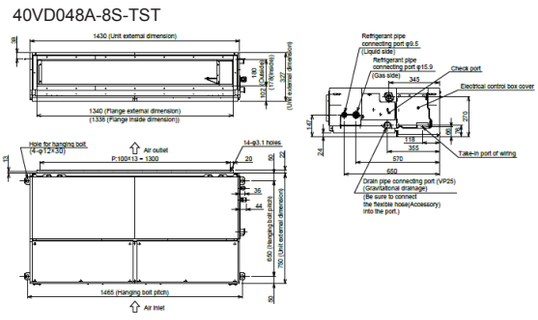

40VD072A-8S-TST to 40VD128A-8S-TST

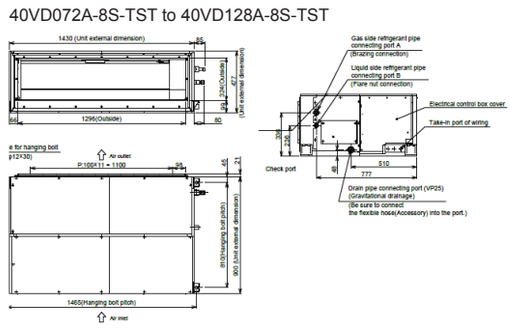

102_Carrier- Thailand XCT8 Brochure_25-01-2024.indd 34 25/01/24 9:18 PM

FRESH AIR INTAKE

Fresh Air Intake Indoor Unit Type

System Restriction	XCT8 Multi-IDU connections	XCT8 All Fresh Air Intake Unit connections
Maximum number of combined ODUs	5	2
Maximum capacity of combined ODUs	120HP	52HP
Maximum number of connected IDUs	128	4
Total capacity of combined IDU & Fresh Air Unit	80–110%	
Maximum number of combined IDUs	4	

Allowed Length & Height Difference of Refrigerant Piping				Allowable value (m)	
				XCT8 Multi-IDU connection	XCT8 All Fresh Air Intake Connection
Piping length	Total extension of pipe (Liquid pipe)	Actual length	m	500/1,200	300
	Farthest piping length	Equivalent/Actual length	m	250/210	230/210
	Main piping length	Equivalent/Actual length	m	120/100	120/100
	Farthest equivalent piping length from the first branching section	Equivalent length	m	90	90
	Maximum actual length of pipes connected to indoor units	Actual length	m	30	30
	Maximum equivalent length between branching sections	Equivalent length	m	50	50
Height difference	Height between outdoor and indoor units	Upper/Lower outdoor unit	m	70/40	70/40
	Height between indoor units/Fresh Air Intake units		m	40	5

Accessories

No.	Part name	Model name	Applied model	Appearance	Notes
1	High-efficiency filter 65	TCB-UFM0481D-E	40VD048A-8S-TST	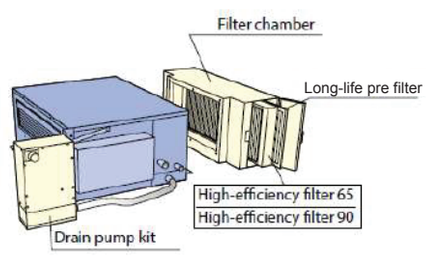	4 units for 1 FCU
2	High-efficiency filter 65	TCB-UFM1281D-E	40VD072 to 128A-8S-TST		
3	High-efficiency filter 90	TCB-UFH0481D-E	40VD048A-8S-TST		4 units for 1 FCU
4	High-efficiency filter 90	TCB-UFH1281D-E	40VD072 to 128A-8S-TST		
5	Stand-alone long-life pre filter	TCK-LK1401D-E	40VD048A-8S-TST		
6	Stand-alone long-life pre filter	TCK-LK2801DP-E	40VD072 to 128A-8S-TST		
7	High-efficiency long-life pre filter	TCK-LK1401D-E (*2)	40VD048A-8S-TST		
8	High-efficiency long-life pre filter	TCK-PF1281DF-E	40VD072 to 128A-8S-TST		
9	Filter chamber	TCB-FC0481DF-E	40VD048A-8S-TST		
10	Filter chamber	TCB-FC1281DF-E	40VD072 to 128A-8S-TST		
11	Drain pump kit	TCB-DP40DFP-E	All Models		048 included
12	Wireless remote controller	40VCI0--8-TEE	40VD-A-8S-TST		For installing as stand-alone

Fresh Air Intake Connectors

• : Available

	CN32	CN60	CN61	CN70	CN73	CN80
	Additional ventilation control from remote control	Operation status signal output (cooling, fan, thermo-on)	External On/Off, operation output and alarm output	Warning symbol on remote control based on signal input	Forced IDU thermo-off based on signal input	Forced IDU thermo-off and IDU lock based on signal input
5HP	•	•	•	•	•	•
8 & 14HP	•	TCB-PCUC2E PCB required	•	TCB-PCUC2E PCB required	TCB-PCUC2E PCB required	TCB-PCUC2E PCB required

102_Carrier- Thailand XCT8 Brochure_25-01-2024.indd 35 25/01/24 9:18 PM

CEILING

40VC-S-8S3TST

CEILING

The Ceiling unit has a simple, yet elegant design to create a pleasant and relaxing environment by quickly conditioning the room air to the desired temperature.

CAPACITY

1.7HP–6HP

SOUND PRESSURE LEVEL

28dB(A)

LOCAL CONTROLS

40VCI3--8-TEE

40VCW56-8-JEE

Specifications

Model name		40VC	015S-8S3TST	018S-8S3TST	024S-8S3TST	027S-8S3TST	036S-8S3TST	048S-8S3TST	056S-8S3TST
Cooling capacity		kW	4.5	5.6	7.1	8.0	11.2	14.0	16.0
		BTU(*1.2)	15,400	19,100	24,200	27,300	38,200	47,800	54,600
		BTU(*1.3)	15,600	19,300	24,500	27,600	38,600	48,400	55,300
Electrical characteristics	Power supply		1-phase 50Hz 230V (220–240V)/1-phase 60Hz (220V)						
	Running current (50Hz/60Hz)	A	0.35/0.37	0.36/0.38	0.64/0.67	0.65/0.67	0.77/0.80	0.77/0.80	0.99/1.02
	Power consumption (50Hz/60Hz)	kW	0.033/0.033	0.034/0.034	0.067/0.067	0.067/0.067	0.083/0.083	0.083/0.083	0.111/0.111
	Starting current (50Hz/60Hz)	A	0.54/0.55	0.55/0.57	0.96/1.00	0.97/1.00	1.15/1.20	1.15/1.20	1.49/1.43
Appearance			Pure White (Munsell N9.1)						
Dimensions (HxWxD)		mm	235x950x690		235x1,270x690			235x1,586x690	
Total weight		kgs	24		30			39	
Soundproof/Heat-insulating material			Polyethylene foam						
Fan unit	Fan		Centrifugal fan (Sirocco fan)						
	Standard airflow (H/M/L)	m³/h	840/690/540	960/720/540	1,440/1,020/750	1,440/1,020/750	1,860/1,350/1,020	1,860/1,530/1,200	2,040/1,650/1,260
	Motor output	W	94				139		
Sound pressure level (H/M/L)		dB(A)	36/34/28	37/35/28	41/36/29	41/36/29	44/38/32	44/41/35	46/42/36
Sound power level		dB(A)	51	52	56	56	59	59	61
Air filter			Standard filter supplied (long-life filter)						
Connecting pipe	Gas side	mm	12.7	12.7	15.9	15.9	15.9	15.9	15.9
	Liquid side	mm	6.4	6.4	9.5	9.5	9.5	9.5	9.5
	Drain port (nominal diam.)	mm	20 (Polyvinyl chloride tube)						

Notes:
(*1) Cooling capacities are measured under conditions specified by JIS B 8615 based on reference piping.
(*1.1) Reference piping consists of 5m main piping and 2.5m branch piping connected with a height of 0m.
(*1.2) Indoor air temperature 27.0˚C DB/19.0˚C WB, Outdoor air temperature 35.0˚C DB.
(*1.3) Indoor air temperature 27.0˚C DB/19.5˚C WB, Outdoor air temperature 35.0˚C DB.

Unit: mm

Drawings

40VC015S-8S3TST, 40VC018S-8S3TST

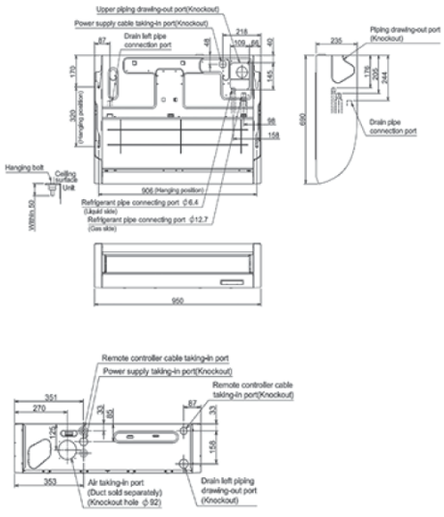

40VC024S-8S3TST, 40VC027S-8S3TST

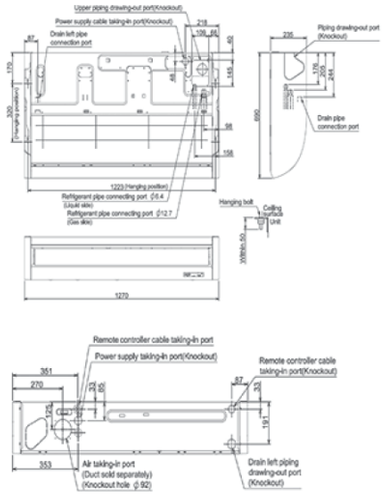

40VC036S-8S3TST to 40VC056S-8S3TST

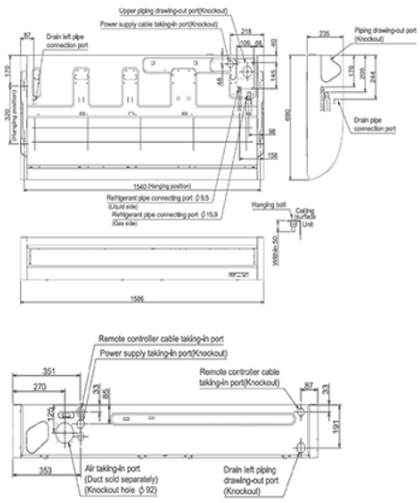

102_Carrier- Thailand XCT8 Brochure_25-01-2024.indd 36 25/01/24 9:18 PM

CEILING

Accessories

No.	Part name	Model name	Applied model	Notes	Remarks
1	Wireless remote controller kit	40VCI3--8-TEE	40VC-S-8S3TST		
2	Wireless remote controller kit	40VCI0--8-TEE		For installing as stand-alone	
3	Drain pump kit	TCB-DP31CE		Antibacterial glass is built into Drain Pump Kit	
4	Elbow piping kit	TCB-KP14CPE	40VC015 to 018S-8S3TST	It is necessary for installation of Drain Pump Kit	Use with TCB-DP31CE
5	Elbow piping kit	TCB-KP24CPE	40VC024 to 056S-8S3TST		
6	Optional connecting kit	TCB-PCUC2E	40VC-S-8S3TST	For external I/O signal without local relay preparation	

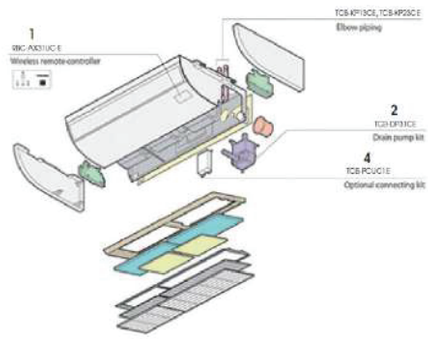

Ceiling Connectors

• : Available

CN32	CN60	CN61	CN70	CN73	CN80
Additional ventilation control from remote control	Operation status signal output (cooling, fan, thermo-on)	External On/Off, operation output and alarm output	Warning symbol on remote control based on signal input	Forced IDU thermo-off based on signal input	Forced IDU thermo-off and IDU lock based on signal input
•	TCB-PCUC2E PCB required	•	TCB-PCUC2E PCB required	TCB-PCUC2E PCB required	TCB-PCUC2E PCB required

102_Carrier- Thailand XCT8 Brochure_25-01-2024.indd 37 25/01/24 9:18 PM

HI-WALL

40VK-S-8S-TST

HI-WALL

The Carrier Hi-Wall unit is engineered to perfectly fit in compact spaces such as offices or small shops.

CAPACITY

0.8HP–4HP

SOUND PRESSURE LEVEL

25dB(A)

LOCAL CONTROLS

Included

40VCW56-8-JEE

Specifications

Model name		40VK	007S-8S-TST	009S-8S-TST	012S-8S-TST	015S-8S-TST	018S-8S-TST	024S-8S-TST	027S-8S-TST	030S-8S-TST	036S-8S-TST
Cooling capacity		kW	2.2	2.8	3.6	4.5	5.6	7.1	8.0	9.0	11.2
		BTU(*1.2)	7,500	9,600	12,300	15,400	19,100	24,200	27,300	30,700	38,200
		BTU(*1.3)	7,600	9,700	12,400	15,600	19,300	24,500	27,600	31,000	38,600
Electrical characteristics	Power supply		1-phase 50Hz 230V (220–240V)/1-phase 60Hz (220V)								
	Running current (50Hz/60Hz)	A	0.15/0.16	0.16/0.17	0.17/0.18	0.25/0.26	0.28/0.29	0.40/0.42	0.28/0.30	0.44/0.46	0.52/0.56
	Power consumption (50Hz/60Hz)	kW	0.015/0.015	0.016/0.016	0.017/0.017	0.028/0.028	0.032/0.032	0.050/0.050	0.034/0.034	0.054/0.054	0.066/0.066
	Starting current (50Hz/60Hz)	A	0.19/0.20	0.20/0.21	0.21/0.22	0.33/0.35	0.36/0.38	0.48/0.50	0.34/0.34	0.50/0.50	0.60/0.60
Dimensions (HxWxD)		mm	293x798x230			320x1,050x250			348x1,200x280		
Total weight		kgs	11			16			21		
Soundproof/Heat-insulating material			Non-flammable insulation								
Fan unit	Fan		Cross Flow Fan								
	Standard airflow (H/M/L)	m^3/h	480/385/270	510/395/270	540/410/270	840/690/550	900/720/550	1,200/900/600	1,200/1,000/800	1,500/1,300/1,100	1,650/1,350/1,250
Sound pressure level (H/M/L)		dB(A)	35/30/25	36/31/25	37/32/25	40/36/32	41/37/32	45/39/33	44/41/39	48/44/41	50/45/43
Sound power level		dB(A)	50	51	52	55	56	60	60	63	65
Air filter			Standard filter supplied (long-life filter)								
Connecting pipe	Gas side	mm	9.5	9.5	9.5	12.7	12.7	15.9	15.9	15.9	15.9
	Liquid side	mm	6.4	6.4	6.4	6.4	6.4	9.5	9.5	9.5	9.5
	Drain port (nominal diam.)	mm	16 (Polyvinyl chloride tube)								

Notes:
(*1)Cooling capacities are measured under conditions specified by JIS B 8615 based on reference piping.
(*1.1) Reference piping consists of 5m main piping and 2.5m branch piping connected with a height of 0m.
(*1.2) Indoor air temperature 27.0°C DB/19.0°C WB, Outdoor air temperature 35.0°C DB.
(*1.3) Indoor air temperature 27.0°C DB/19.5°C WB, Outdoor air temperature 35.0°C DB.

Drawings

Unit: mm

IDU

40VK007S-8S-TST to 40VK012S-8S-TST

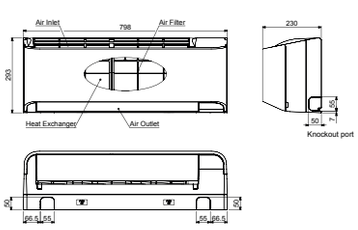

40VK015S-8S-TST to 40VK024S-8S-TST

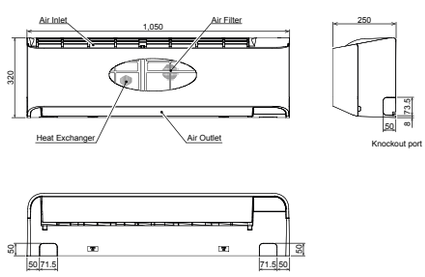

40VK027S-8S-TST to 40VK036S-8S-TST

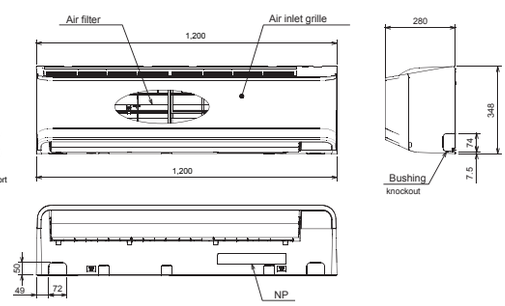

Hi-Wall Connectors

• : Available

CN32	CN60	CN61	CN70	CN73	CN80
Additional ventilation control from remote control	Operation status signal output (Cooling, fan, thermo-on)	External On/Off, operation output and alarm output	Warning symbol on remote control based on signal input.	Forced IDU thermo-off based on signal input	Forced IDU thermo-off and IDU lock based on signal input
•	•	•	TCB-PCUC2E PCB required	TCB-PCUC2E PCB required	•

102_Carrier- Thailand XCT8 Brochure_25-01-2024.indd 38 25/01/24 9:18 PM

DX COIL INTERFACE ADVANCE
40VAM-C8FATEE, 40VA-V8-ATEE

NEW

The DX Coil Interface Advance is built to enable seamless connectivity. With this, users can connect XCT8 and third-party air handling units by TA, DDC or TF control conditions.

CAPACITY

8HP–20HP

LOCAL CONTROLS

40VCW56-8-JEE

DX Coil Controller

Model name		40VAM--C8FATEE (Terminal block without relay)	40VAMR-C8FATEE (Terminal block with relay)
Power supply		1-phase 50Hz (220–240V)/1-phase 60Hz (208–230V)	
Appearance		Heat-insulating material attached: Zinc hot dipping steel plate	
Dimensions (HxWxD)	mm	420x330x122	
Total weight	kgs	4.0	4.1
Controllable operation type		TA, DDC, TF	
Operable ambient condition	° C/RH	5–52/10–80	

DX Valve Kit

Model name		40VA010V8-ATEE			40VA020V8-ATEE			
Capacity code	HP	8	10	12	14	16	18	20
Dimensions (HxWxD)	mm	360x209x80						
Total weight	kg	2.3			2.4			

Single combination

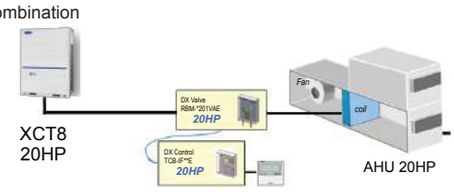

Twin combination

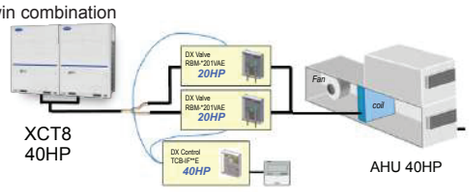

Multi combination

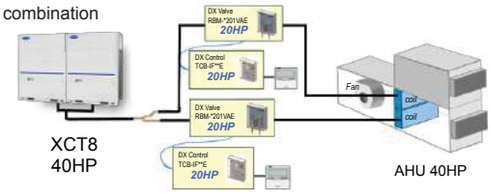

Unit: mm

Drawings

40VAM--C8FATEE
40VAMR-C8FATEE

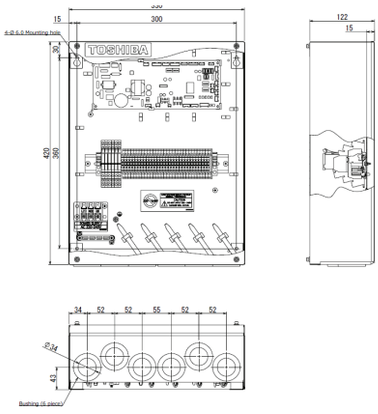

40VA010V8-ATEE
40VA020V8-ATEE

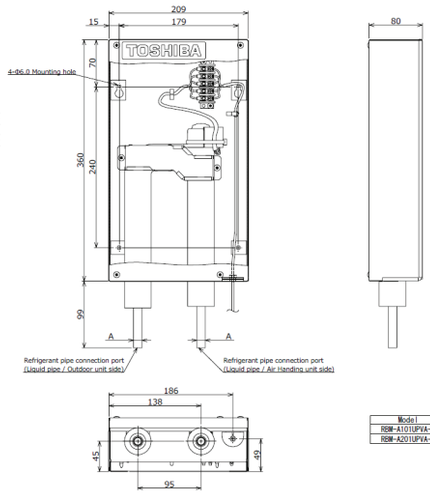

Model	A (Pipe)
RBM-A101UPVA-E	φ12. 7
RBM-A201UPVA-E	φ15. 88

DX COIL INTERFACE ADVANCE

102_Carrier- Thailand XCT8 Brochure_25-01-2024.indd 39 25/01/24 9:18 PM

DX COIL INTERFACE ADVANCE

IDU

Type of AHU DX Coil	Normal	Interlaced, Split-Face
Appearance of AHU DX Coil		Interlaced (DX Coil No. 2) Split-Face (DX Coil No. 2) ... Interlaced (DX Coil No. 4) Split-Face (DX Coil No. 4) ... Interlaced (DX Coil No. 6) Split-Face (DX Coil No. 6)

DX Coil Number		1	1	2	3	4	5	6	2	3
DX Combination		Single	Twin	Single-Multi (2)	Single-Multi (3)	Single-Multi (4)	Single-Multi (5)	Single-Multi (6)	Double-Twin	Triple-Twin
DX Controller Number		1	1	2	3	4	5	6	2	3
DX Valve Kit Number		1	2	2	3	4	5	6	4	6
DX Valve Kit Combination [HP]	8	8								
	10	10								
	12	12								
	14	14								
	16	16	8+8	8+8						
	18	18		10+8						
	20	20	10+10	10+10						
	22			12+10						
	24		12+12	12+12	8+8+8					
	26				10+8+8					
	28		14+14	14+14	10+10+8					
	30			16+14	10+10+10					
	32		16+16	16+16	12+10+10	8+8+8+8			(8+8)+(8+8)	
	34			18+16	12+12+10	10+8+8+8				
	36		18+18	18+18	12+12+12	10+10+8+8				
	38			20+18		10+10+10+8				
	40		20+20	20+20		10+10+10+10	8+8+8+8+8		(10+10)+(10+10)	
	42				14+14+14	12+10+10+10	10+8+8+8+8			
	44				16+14+14	12+12+10+10	10+10+8+8+8			
	46				16+16+14	12+12+12+10	10+10+10+8+8			
	48				16+16+16	12+12+12+12	10+10+10+10+8	8+8+8+8+8+8	(12+12)+(12+12)	(8+8)+(8+8)+(8+8)
	50				18+16+16		10+10+10+10+10	10+8+8+8+8+8		
	52				18+18+16		12+10+10+10+10	10+10+8+8+8+8		
	54				18+18+18		12+12+10+10+10	10+10+10+8+8+8		
	56				20+18+18	14+14+14+14	12+12+12+10+10	10+10+10+10+8+8	(14+14)+(14+14)	
	58				20+20+18	16+14+14+14	12+12+12+12+10	10+10+10+10+10+8		
	60				20+20+20	16+16+14+14	12+12+12+12+12	10+10+10+10+10+10		(10+10)+(10+10)+(10+10)
	62					16+16+16+14		12+10+10+10+10+10		
	64					16+16+16+16		12+12+10+10+10+10	(16+16)+(16+16)	
	66					18+16+16+16		12+12+12+10+10+10		
	68					18+18+16+16		12+12+12+12+10+10		
	70					18+18+18+16	14+14+14+14+14	12+12+12+12+12+10		
	72					18+18+18+18	16+14+14+14+14	12+12+12+12+12+12	(18+18)+(18+18)	(12+12)+(12+12)+(12+12)
	74					20+18+18+18	16+16+14+14+14			
	76					20+20+18+18	16+16+16+14+14			
	78					20+20+20+18	16+16+16+16+14			
	80					20+20+20+20	16+16+16+16+16		(20+20)+(20+20)	
	82						18+16+16+16+16			
	84						18+18+16+16+16	14+14+14+14+14+14		(14+14)+(14+14)+(14+14)
	86						18+18+18+16+16	16+14+14+14+14+14		
	88						18+18+18+18+16	16+16+14+14+14+14		
	90						18+18+18+18+18	16+16+16+14+14+14		
	92						20+18+18+18+18	16+16+16+16+14+14		
	94						20+20+18+18+18	16+16+16+16+16+14		
	96						20+20+20+18+18	16+16+16+16+16+16		(16+16)+(16+16)+(16+16)
	98						20+20+20+20+18	18+16+16+16+16+16		
	100						20+20+20+20+20	18+18+16+16+16+16		
	102							18+18+18+16+16+16		
	104							18+18+18+18+16+16		
	106							18+18+18+18+18+16		
	108							18+18+18+18+18+18		(18+18)+(18+18)+(18+18)
	110							20+18+18+18+18+18		
	112							20+20+18+18+18+18		
	114							20+20+20+18+18+18		
	116							20+20+20+20+18+18		
	118							20+20+20+20+20+18		
	120							20+20+20+20+20+20		(20+20)+(20+20)+(20+20)

*Please refer to the guidelines of DX Coil Interface Advance for other combinations of DX Coil Controller and DX Valve Kit.

102_Carrier- Thailand XCT8 Brochure_25-01-2024.indd 40 25/01/24 9:18 PM

AIR-TO-AIR HEAT EXCHANGER

VN-U-SY-E

The Carrier VN Model helps reduce the overall capacity of the system. To do this, it uses exhaust air to precondition incoming air and lower the cooling load on the system.

AIRFLOW

150m³/h–2,000m³/h

SOUND PRESSURE LEVEL

20dB(A)

LOCAL CONTROLS

NRC-01HE

Specifications

Model name		VN-	U00151SY-E	U00151SY-E	U00351SY-E	U00501SY-E	U00651SY-E	U00801SY-E	U01001SY-E	U01501SY-E	U02001SY-E
Air volume (Extra High/High/Low)		m³/h	150/150/110	250/250/155	350/350/210	500/500/390	650/650/520	800/800/700	1,000/1,000/755	1,500/1,500/1,200	2,000/2,000/1,400
Power consumption	Extra high	W	68–78	123–138	165–182	214–238	262–290	360–383	532–569	751–786	1,084–1,154
	High	W	59–67	99–111	135–145	176–192	240–258	339–353	494–538	708–784	1,032–1,080
	Low	W	42–47	52–69	82–88	128–142	178–191	286–300	353–370	570–607	702–742
External static pressure	Extra High	Pa	82–102	80–98	114–125	134–150	91–107	142–158	130–150	135–156	124–143
	High	Pa	52–78	34–65	56–83	69–99	58–82	102–132	97–122	103–129	92–116
	Low	Pa	47–64	28–40	65–94	62–92	61–96	76–112	84–127	112–142	110–143
Sound pressure level	Extra High	dB(A)	26–28	29.5–30	34–35	32.5–34	34–36	37–38.5	39.5–40.5	38–39	41–42.5
	High	dB(A)	24–25.5	25–27	30–32	29.5–31	33–34	35.5–37	38.5–40	36.5–37.5	39.5–41
	Low	dB(A)	20–22	21–22	27–29	26–29	31–32.5	33.5–35	34–35.5	36–37.5	37–38
Temperature exchange efficiency (%)	Extra High		81.5	78	74.5	76.5	75	76.5	73.5	76.5	73.5
	High		81.5	78	74.5	76.5	75	76.5	73.5	76.5	73.5
	Low		83	81.5	79.5	78	76.5	77.5	77	79	77.5
Enthalpy exchange efficiency (%)	Extra High	Heating	74.5	70	65	72	69.5	71	68.5	71	68.5
	High	Heating	74.5	70	65	72	69.5	71	68.5	71	68.5
	Low	Heating	76	74	71.5	73.5	71.5	71.5	71.5	73.5	72
	Extra High	Cooling	69.5	65	60.5	64.5	61.5	64	60.5	64	60.5
	High	Cooling	69.5	65	60.5	64.5	61.5	64	60.5	64	60.5
	Low	Cooling	71	69	67	66.5	64	65.5	64.5	67	65.5
Power supply			1 phase 50Hz 230V (220–240V) / 1 phase 60Hz (220V)								
Dimensions (HxWxD)		mm	900x900x290			1,140x1,140x350		1,189x1,189x400		1,189x1,189x810	
Weight		kgs	36	36	38	53	53	70	70	143	143
Duct diameter		mm	100	150		200		250		Inside: 250 / Outside: 283x730	
Filtration efficiency grade (%)			82								
Operating range	Around unit		-10°C–40°C; 80% RH or less								
	Outdoor Air (OA)		-15°C(*1)–43°C; 80% RH or less								
	Return Air (RA)		5°C–40°C; 80% RH or less								

*1: This model only supports old communication protocol. Please contact your local distributor to connect these indoor units.
* Air volume can be changed over to High (Extra High) mode or Low mode at both heat exchange and normal ventilation modes.
* Sound pressure level is measured 1.5m below the center of the unit and the value which was measured at the acoustic room.
* Values of sound pressure levels usually become higher than above due to the influence of actual installation conditions such as reflected sound and peripheral noise.
* Sound power level is the value of casing.
*1) When the temperature of outside air is below -10°C, the unit runs in Cold Operation Mode (intermittent operation of the ventilation for air supply). The unit cannot be used at -15°C or less. The ventilator for air supply stops and also the ventilator for air exhaust can be stopped by this setting.

Drawings

Unit: mm

VN-U00151SY-E to VN-U00251SY-E

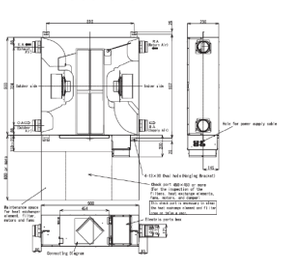

VN-U00501SY-E to VN-U00651SY-E

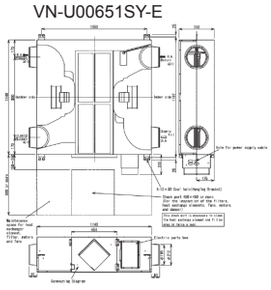

VN-U00801SY-E to VN-U01001SY-E

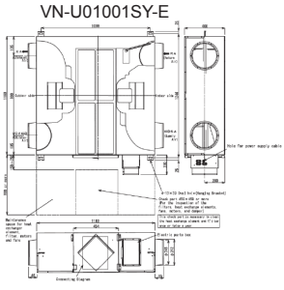

VN-U01501SY-E to VN-U02001SY-E

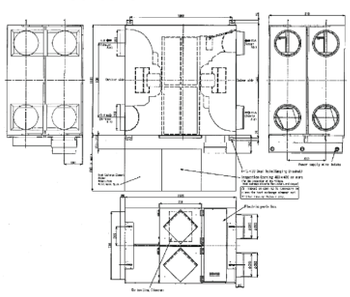

AIR-TO-AIR HEAT EXCHANGER

IDU

Accessories

Part name	Model name	Description	Appearance	Remarks
Control	NRC-01HE	Dedicated remote control for all Air-to-Air Heat Exchangers		Integrated functions: Fan Speed, Free Cooling, Air Balance Volume Rate, Temperature Management and Timer
	NRB-1HE	All Air-to-Air Heat Exchangers On/Off additional PCB		On/Off optional PCB for Air-to-Air Heat Exchanger

Other Information

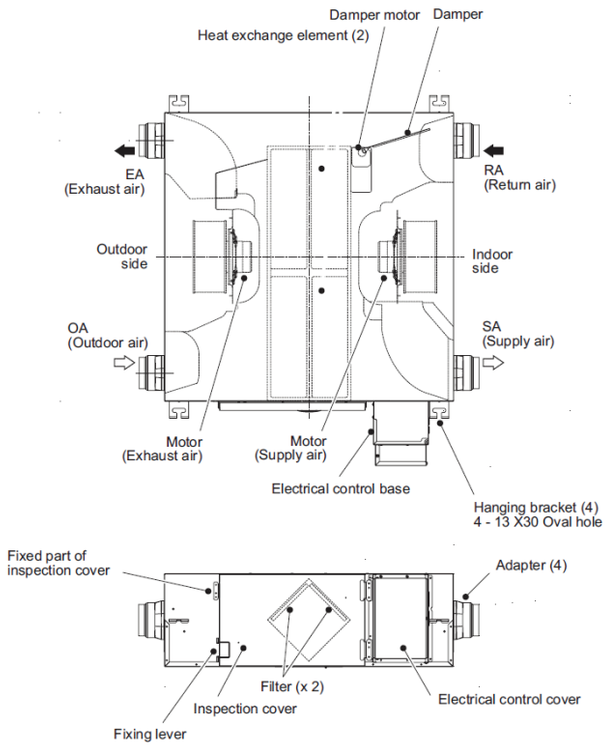

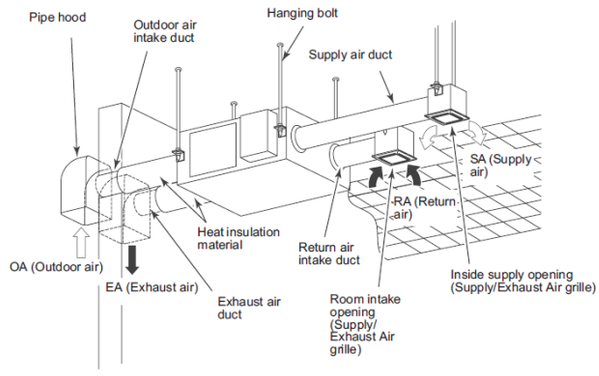

102_Carrier- Thailand XCT8 Brochure_25-01-2024.indd 42 25/01/24 9:18 PM

CONTROL SOLUTIONS
GET THE POWER OF WIRELESS SOLUTIONS

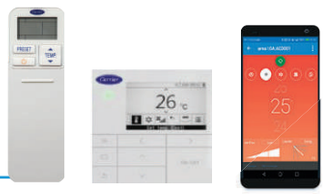

In addition to ensuring the quality of the air conditioners, these controls play a crucial role in the ease of use and efficiency of the units to give optimized settings for the perfect climate. Alongside local control options, Carrier offers a broad selection of central control systems or the choice to integrate in the building control system.

ONE CONTROL FOR EVERY USE

Local Controls

Cable remote controls (max. cable length 500m) or wireless infrared remote controls are used to control individuals units or groups of up to 8 IDUs. Additional modules allow units to be controlled from any location via the Internet or applications.

Central Controls

VRF systems can be controlled from a preferred centralized location, such as the reception or plant room. Cable lengths can be max. 2,000m and up to 512 IDUs can be controlled.

Building Control Systems

Carrier air conditioners can be integrated with all conventional building control systems. This makes air conditioning a crucial aspect of a building's central control.

GET CONTROL, WHEREVER YOU ARE

On the cloud with Carrier In The Air app

Locally with standard remote control

Using Carrier Web Browser for all your facilities

TRUST THE TU2C-LINK

All control devices are connected to the air conditioner's side using Carrier's dedicated central control network, also known as the TU2C-LINK. It can be used to connect all equipment directly.

Wiring:	2-core, Non-polarity
Type:	Shield wire
Size/length:	• 1 to 1.5mm²/Up to 1,000m • 2mm²/Up to 2,000m

102_Carrier- Thailand XCT8 Brochure_25-01-2024.indd 43 25/01/24 9:18 PM

INDIVIDUAL REMOTE CONTROLLER

CONTROL

• : Available

TYPE		INFRARED				WIRED		
Part number		40VCI0–8-TEE	40VCI7–8-TEE	40VCI1–8-TEE	40VCI3–8-TEE	40VCW61-8-CEE	40VCW56-8-JEE	NRC-01HE
Picture								
Dimensions (HxWxD) in mm	Remote	157x56x19	157x56x19	157x56x19	157x56x19	86x86x16	120x120x20	120x120x16
	Infrared receiver	120x70x18	204x204x24	140x113x12	130x65			
Compatibility		All Indoor Units	4-Way Cassette	1-Way Cassette	Ceiling	All Indoor Units	All Indoor Units	Air-to-Air Heat Exchanger
Connectivity		1:1	1:1	1:1	1:1	1:16	1:16	1:8
Standard functions	On/Off	•	•	•	•	•	•	•
	Mode (Heating, Cooling, Ventilation, Dry, Auto)	•	•	•	•	•	•	•
	Temperature setting	• / 17°C–30°C	• / 17°C–30°C	• / 17°C–30°C	• / 17°C–30°C	• / 18°C–29°C	• / 18°C–29°C	• / 18°C–29°C
	Fan speed (Auto, Manual 5 Speed)	•	•	•	•	•	•	
	Air direction (Swing Mode or Manual Orientation)	•	•	•	•	•	•	
Scheduling	Timer function	•	•	•	•	•	•	•
	Schedule function						•	
	Return back						•	
Advanced functions	Dual set point						•	
	Soft cooling						•	
	Night operation						•	
	Energy-saving function						•	•
	Frost protection						•	•
	Lock function						•	
	Summer time						•	
	Room naming						•	
Installation & maintenance	Dirty filter indication					•	•	
	Error display	•	•	•	•	•	•	•
	System settings					•	•	
	Indoor unit serial number						•	
Outputs	Error output					•	•	•
	External ventilation control						•	
Display & Interface	Interface	Icon	Icon	Icon		Icon	Menu	Icon
	Multilanguage						•	
	Luminous buttons						•	
	Backlight display						•	
Other	Temperature sensor					•	•	•
Communication protocol						TU2C-LINK	TU2C-LINK	TCC-LINK

Installation Drawings

Individual Controls

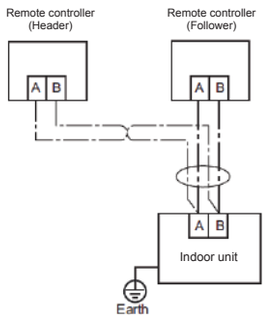

Group Controls

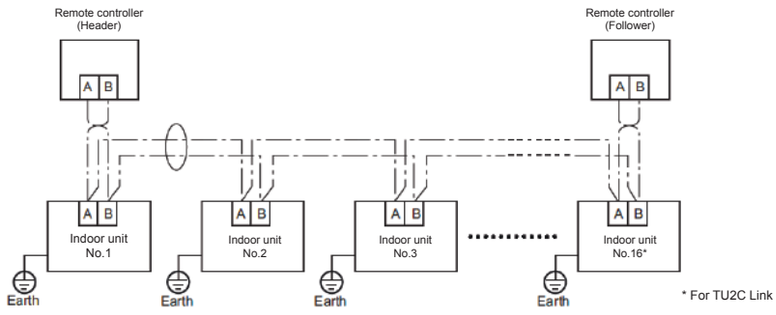

102_Carrier- Thailand XCT8 Brochure_25-01-2024.indd 44 25/01/24 9:18 PM

SMART SOLUTIONS

TYPE		WIRED	Wi-Fi INTERFACE
Part number		40VCC33-8FJEE	40VCIWF0010UCPE
Picture			
Dimensions (HxWxD) in mm		120x120x16	120x120x28
Compatibility		All Systems	All Indoor Units
Connectivity		1:64	1:1
Standard functions	On/Off	•	•
	Mode (Heating, Cooling, Ventilation, Dry, Auto)	•	•
	Temperature setting	•	•
	Fan speed (Auto, Manual 5 Speed)	•	•
	Air direction (Swing Mode or Manual Orientation)	•	•
Scheduling	Timer function		
	Schedule function	•	•
	Return back		
Advanced functions	Dual set point		
	Soft cooling		
	Energy-saving function		•
	Energy monitoring		
	Air purifier kit		•
	Room naming		•
Central control	Permit/prohibit function	•	
	Group control	•	•
Installation & maintenance	Dirty filter indication	•	
	Error display	•	•
	Error transfer by email		
	System settings	•	•
Display & Interface	Interface	Menu	
	Multilanguage	•	•
	Luminous buttons	•	
	Backlight display	•	
Other	Digital input/output		
	Web connection		
Communication protocol		TU2C-LINK	

CENTRAL CONTROL

Drawings

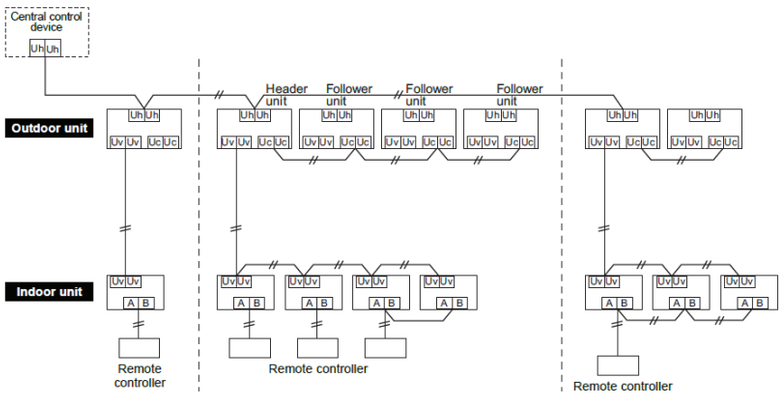

Wi-Fi Interface Specification

Connector length	Maximum from FCU: 50m
Net weight	0.13kg
Operating temperature	0–50°C
Power input	from FCU via AB line
Power consumption	0.6W
Casing material	ABS UL94-HB
Wi-Fi	2.4GHz
Radio protocol	IEEE 802.11b/g/n

System Overview

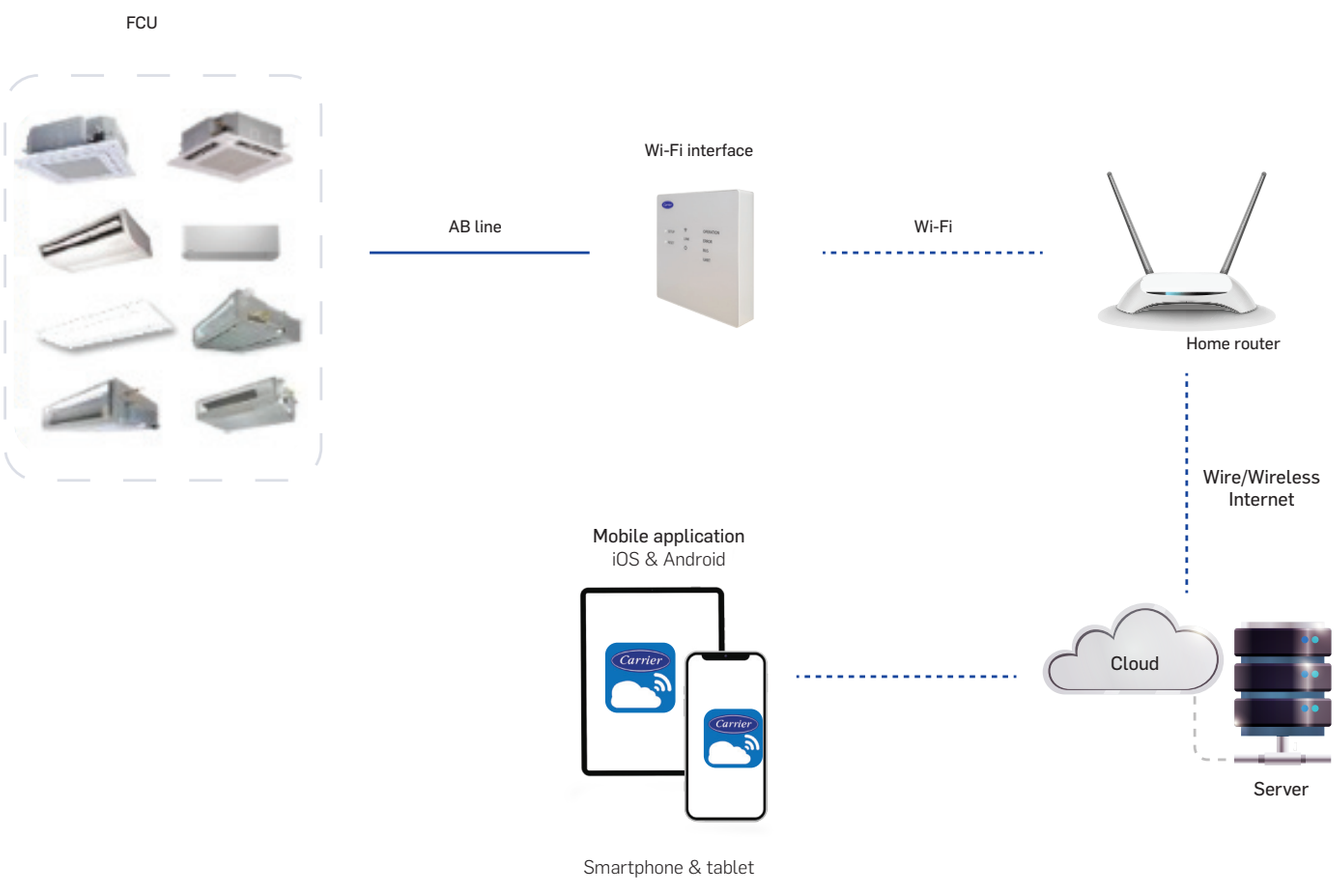

102_Carrier- Thailand XCT8 Brochure_25-01-2024.indd 46 25/01/24 9:18 PM

ULTIMATE COOLING CONVENIENCE

Take control and cool your home from anywhere, anytime with Carrier's Wi-Fi solution. Connect to your air-conditioner network with the new **Carrier In The Air app**, available on iOS and Android, for a fast and convenient way to control the comforts of your home and monitor energy usage.

FCU can be controlled by up to 5 users.

Up to 16 IDUs can be controlled by 5 users, making it ideal for home and family applications.
All FCUs can be divided up to 3 groups.

Carrier In The Air

Available on:

GET IT ON Google Play

Download on the App Store

SMART VOICE CONTROL

Tell Carrier how to cool your home with smart speaker voice control functions compatible with Google Home Assistant and Amazon Alexa.

works with the Google Assistant

WORKS WITH amazon alexa

102_Carrier- Thailand XCT8 Brochure_25-01-2024.indd 47 25/01/24 9:19 PM

TOUCH SCREEN SOLUTIONS

CONTROL

Part number	Touch Screen Smart Manager	40VCC73-8FJEE	40VCC631SJEE
Picture			
Dimensions (HxWxD) in mm		205x136x90	255x323x49
Compatibility		All Indoor Units (except Hot Water Module, DX Kit, Fresh Air, Air-to-Air Heat Exchanger)	All Indoor Units TCS-NET relay interface required (BMS-IFLSV4E)
Connectivity		1:256	1:512
Screen	Type / Dimension	Capacitive color touch screen/7"	Capacitive color touch screen/12.1"
Standard functions	On/Off	•	•
	Mode (Heating, Cooling, Ventilation, Dry, Auto)	•	•
	Temperature setting	•	•
	Fan speed (Auto, Manual 5 Speed)	•	•
	Air direction (Swing Mode or Manual Orientation)	•	•
Scheduling	Timer function	•	•
	Schedule function	•	•
	Return back	•	•
Advanced functions	Dual set point	•	•
	Soft cooling	•	•
	Energy-saving function	•	•
	Energy monitoring	•	• (if power metter, BMS-IFWH5E interface relay required)
	Rooms naming		
Central control	Permit/prohibit function		
	Group control	•	•
Installation & maintenance	Dirty filter indication	•	•
	Error display	•	•
	Error transfer by email	•	•
	System settings	•	•
Outputs	Digital input/output	•	• (Digital I/O BMS-IFDD03E required)
	Web connection	•	•
Display & Interface	Interface	Menu	Menu
	Multiple languages	•	•
	Backlight display	•	•
Communication protocol		TU2C-LINK	TCC-LINK

Installation Drawings

40VCC73-8FJEE

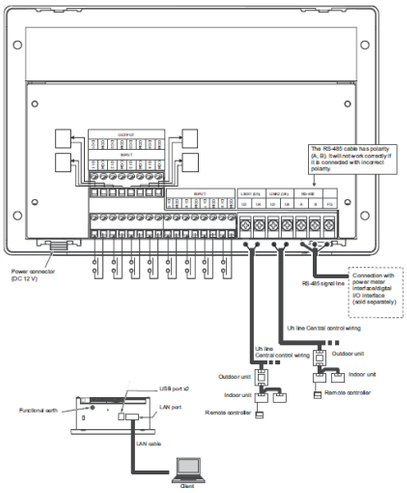

ADDITIONAL PCB

Additional PCB for Outdoor Units

Model name	Power peak-cut control borad			External master On/Off control board			Output control board		
	TCB-PCDM4E			TCB-PCMO4E			TCB-PCIN4E		
Power peak cut control	•	•	•						
Power peak cut extend	•	•	•						
Snowfall fan control				•	•				
External master on/off control				•	•	•			
Night operations (sound reduction) control				•	•	•			
Operational mode selection control				•	•	•			
Error/operation output control							•	•	•
Compressor operation output							•	•	•
Operation rate display							•	•	•
Max. number installed	1	1	1	4	4	2	2	2	1
Type of digital input/output	2/1			6/-			-/8		

CENTRAL CONTROL

Additional PCB for Indoor Units

OPTIONAL CONNECTION KIT TCB-PCU2-E

SIGNAL
Output Terminal TB1

Signal outputs (including Mode, Fan Status, Alarm & Defrost) are extracted from OUT 1, OUT 2 and OUT 3.

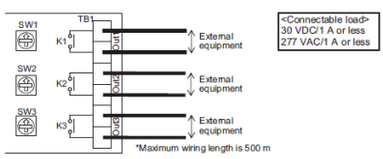

EXTERNAL
Digital Input Terminal TB2

Stop air conditioner or lock local remote by signal input.

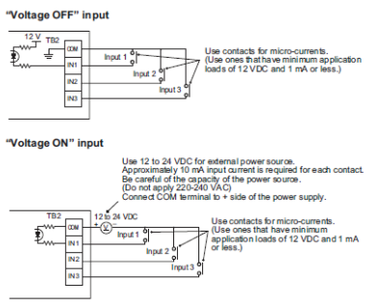

EXTERNAL
Analog Input Terminal TB3

Change the indoor unit's operation mode (AN1), set temperature (AN2), and blower setting (AN3) by connecting a variable resistor to the analog input terminal.

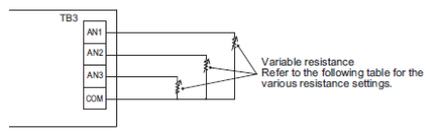

Multi-Tenant Kit TCB-PSMT1E

For multi-tenant application, this PCB maintains low voltage power during tenant absence when the main power supply for IDU is shut down.

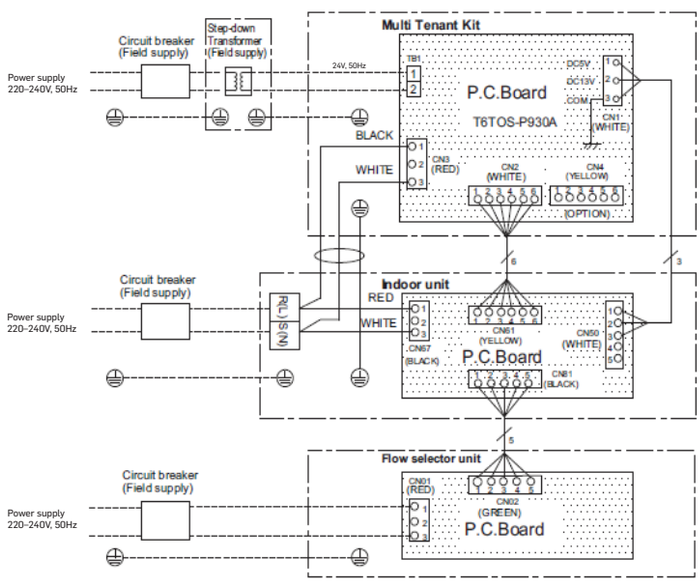

102_Carrier- Thailand XCT8 Brochure_25-01-2024.indd 49 25/01/24 9:19 PM

GATEWAY

CONTROL

Features

Part number		40VCBM1-8FJEE	40VCBB1-8FJEE
Langage		Modbus®	BACnet®
Picture			
Dimensions (HxWxD) in mm		170x200x66	90x140x45
Compatibility		All Indoor Units (HWM, Air-to-Air Heat Exchanger excluded)	All Indoor Units (HWM excluded)
Connectivity	Max. number of indoor units	128	128
	Max. number of outdoor units	16	
	Max. number of gateways	15	1
Command	On/Off	R/W	R/W
	Accumulated operation time	R/W	
	Mode (Heating, Cooling, Ventilation, Dry, Auto)	R/W	R/W
	Temperature setting	R/W	R/W
	Fan speed (Auto, Manual 5 Speed)	R/W	R/W
	Air direction (Swing Mode or Manual Orientation)	R/W	R/W
	Soft cooling		
	Save operation		
	Dirty filter indication	R/W	R/W
	Room temperature	R	R
	Permitting/prohibiting of local operations	R/W	R/W
	Temperature setting range limitation	R/W	
	Error status	R	R
		R	
		R	
		R	
		R	
		R	
Protocol		Modbus® RTU	BACnet® IP
Infrastructure		RS-485	
Requirements (locally supplied)		Modbus Master Device	
		Modbus Master Device	
Toshiba communication protocol		TU2C-LINK	TU2C-LINK

102_Carrier- Thailand XCT8 Brochure_25-01-2024.indd 50 25/01/24 9:19 PM

TECHNICAL GUIDEBOOK

CONTROL

Refrigerant Accessories

Model name / Compatible Carrier	Specification	Picture	Total capacity codes
RBM-BY55EC	Branching joint		Below 6.4HP
RBM-BY105EC			From 6.4 to 14.2HP
RBM-BY205EC			From 14.2 to 25.2HP
RBM-BY305EC			From 25.2 to 61.2HP
RBM-BY405EC			61.2HP or more
RBM-HY1043E	Headers branching 4-way		Below 14.2HP
RBM-HY2043E			Below 14.2HP to 25.2HP
RBM-HY1083E	Headers branching 8-way		Below 14.2HP
RBM-HY2083E			Below 14.2HP to 25.2HP
RBM-BT14E	Joints for connection of outdoor units		Below 26HP system capacity
RBM-BT24EC			26HP to 62HP system capacity
RBM-BT34EC			Above 62HP system capacity

Carrier Piping

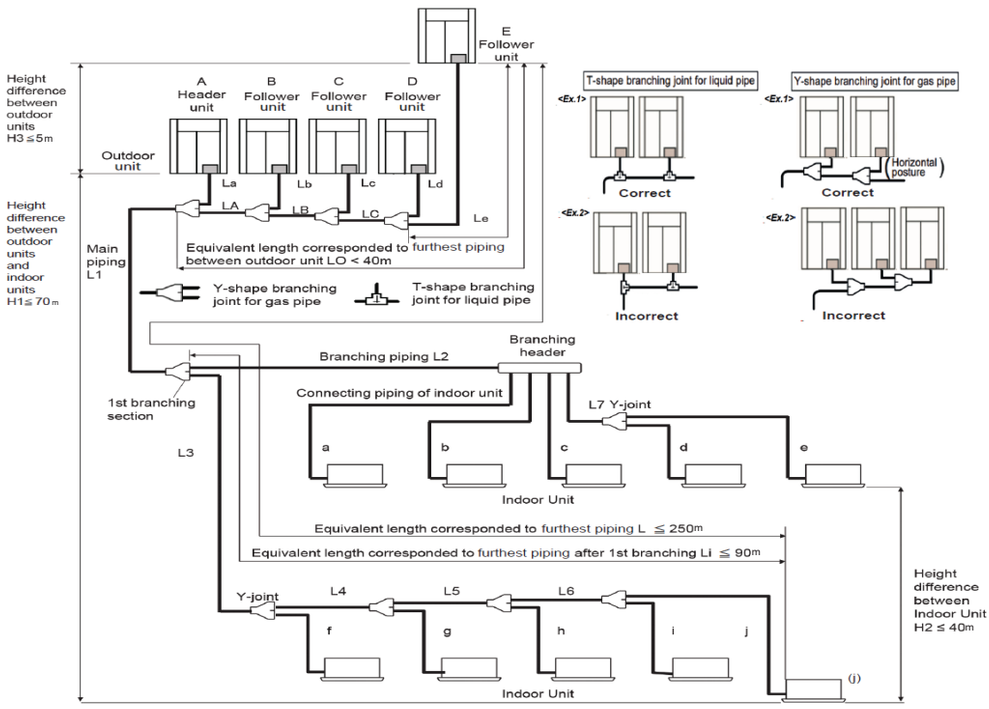

System Restrictions

		XCT8
Outdoor unit combination		Up to 5 units
Total capacity of outdoor units		Up to 120HP
Indoor unit connection		Up to 128 units
Total capacity of indoor units	H2 ≤ 15m	Max. 200%
	15m > H2	105%

T-shape branching joint for liquid pipe

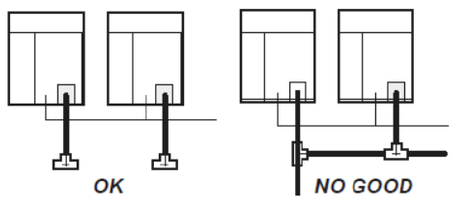

Y-shape branching joint for gas pipe

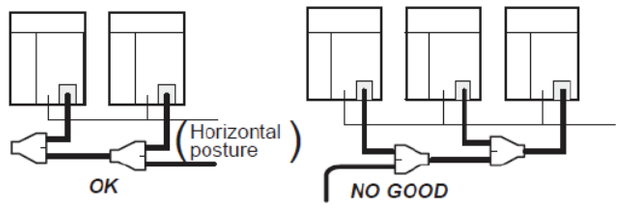

Caution for Installation

Be careful of connecting arrangement of both the header unit and follower units. Set the outdoor units in the order of capacity from the unit with the largest capacity.

At a level position

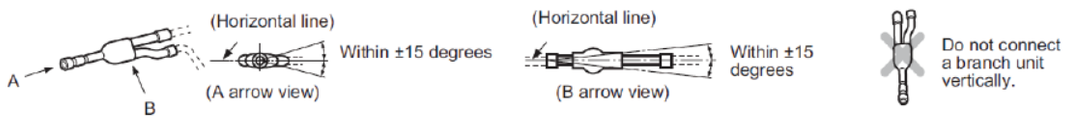

Free Branching System

Line branching system	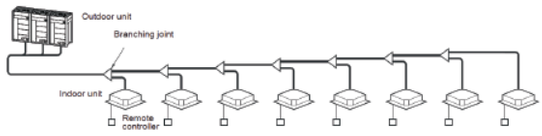
Header branching system	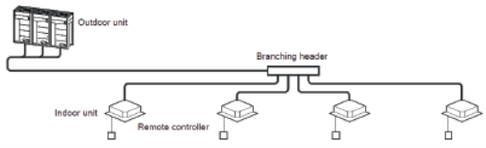
Header branching system after line branching	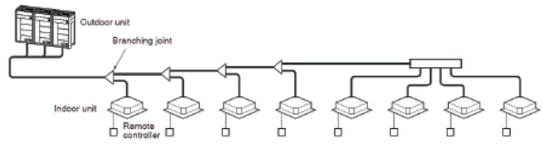
Line branching system after header branching	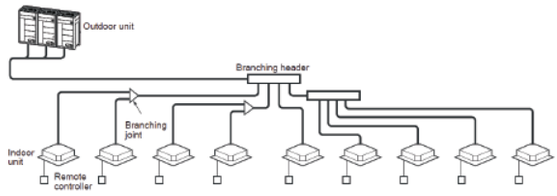
Header branching system after header branching	

102_Carrier- Thailand XCT8 Brochure_25-01-2024.indd 52 25/01/24 9:19 PM

Electrical Wiring

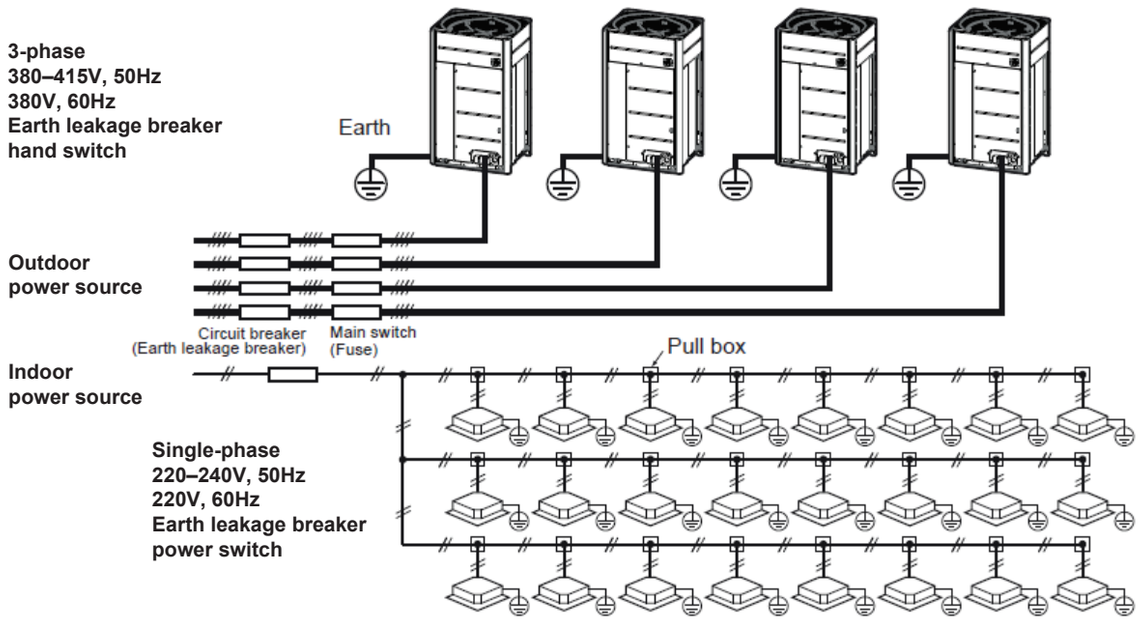

Measurement of Sound Pressure Level

XCT8

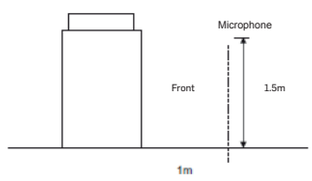

COMPACT 4-WAY CASSETTE, SMART 4-WAY CASSETTE, 4-WAY CASSETTE, 2-WAY CASSETTE & 1-WAY CASSETTE

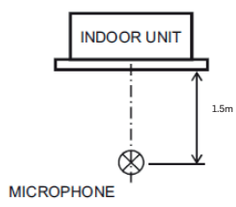

HI-WALL CEILING

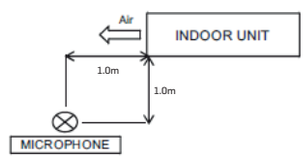

CONCEALED CHASSIS

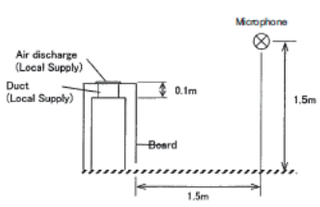

FLOOR STANDING

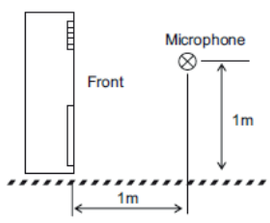

SLIM DUCT, STANDARD DUCT & HIGH STATIC DUCT

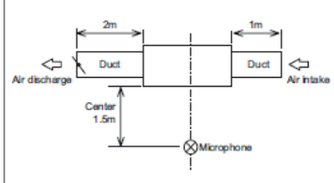

HIGH STATIC DUCT SIZES 72 & 96

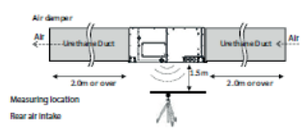

FRESH AIR

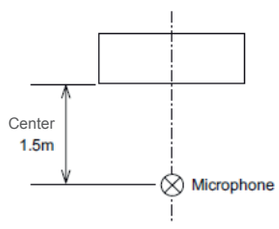

AIR-TO-AIR HEAT EXCHANGER

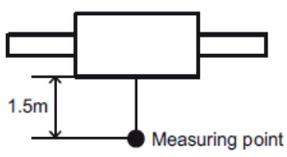

SOFTWARE

Selection Tool

Designed with a user-friendly interface, the Carrier Selection Software allows both novice and expert users alike to create simple, yet detailed VRF system schematics. This software is highly versatile, allowing the level of detail to be tailored to customer needs. It also allows users to specify pricing strategy and create additional interim reports, including any diagrams or schematics required. Final detailed reports can be produced and sent to customers in PDF format or other complex formats, such as AutoCAD DXF, allowing simple integration into this existing software packages.

Software Main Screen

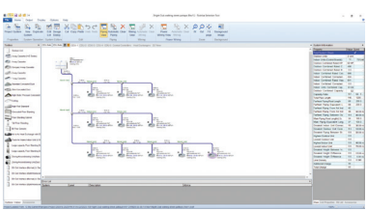

Fully Customize Project

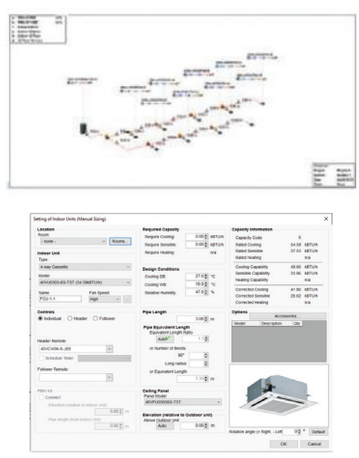

Complete Report

102_Carrier- Thailand XCT8 Brochure_25-01-2024.indd 54 25/01/24 9:19 PM

SEAMLESS SERVICEABILITY

Carrier XCT8 enables you to choose between the Wave Tool Advance app using your smartphone's NFC connection or the link adaptor connected to the indoor or outdoor unit to save time during commissioning and maintenance.

CONTROL

NEW Application
Wave Tool Advance

Wave Tool Advance

GET IT ON Google Play

Download on the App Store

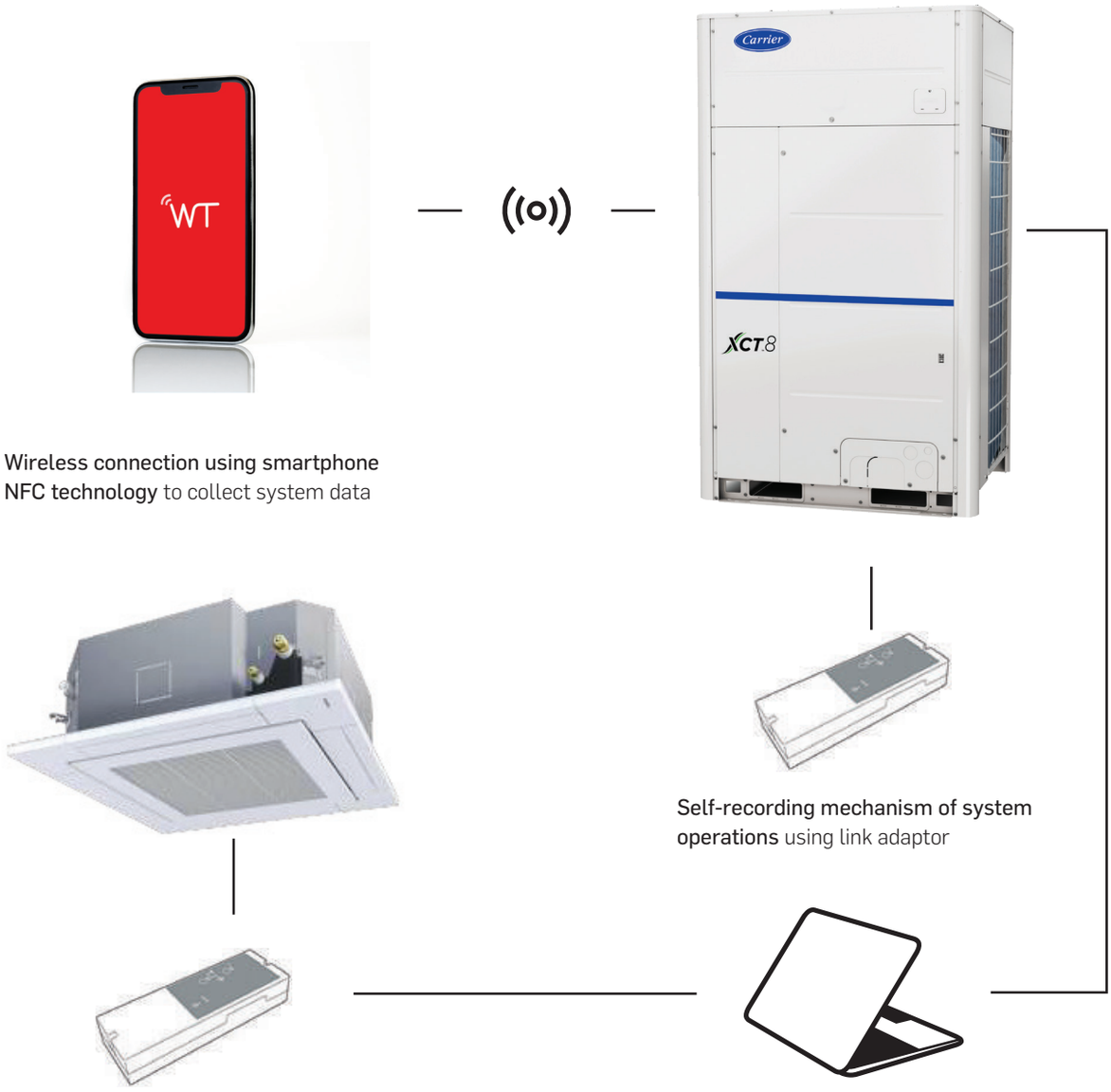

Wireless connection using smartphone NFC technology to collect system data

Self-recording mechanism of system operations using link adaptor

Get system data access from indoor unit using link adaptor

Direct USB connection to get system data access

102_Carrier- Thailand XCT8 Brochure_25-01-2024.indd 55 25/01/24 9:19 PM

RELIABLE SIMULATION WITH CFD

We understand that every building comes with its unique design challenges & limitations. To ensure ODUs are appropriately placed to deliver efficient performance to you, Carrier provides air circulation study and simulation using the Computational Fluid Dynamics (CFD).

Occurrences of hot air short circuits persist with the presence of ceiling, high wall, louver and the proximity of outdoor units, among other factors. CFD ensures that common design pitfalls like hot air circulation can be detected and prevented.

Example of Hot Air Short Circuit

A standard top discharge VRF ODU is installed in a location surrounded with a wall and a ceiling. The air discharged from the top of the unit is drawn back in from the suction vent. Such an event leads to:

- High Operating Temperatures
- Reduced Capacity & Inefficient Operations
- Shorter Unit Lifecycle
- System Shutdown

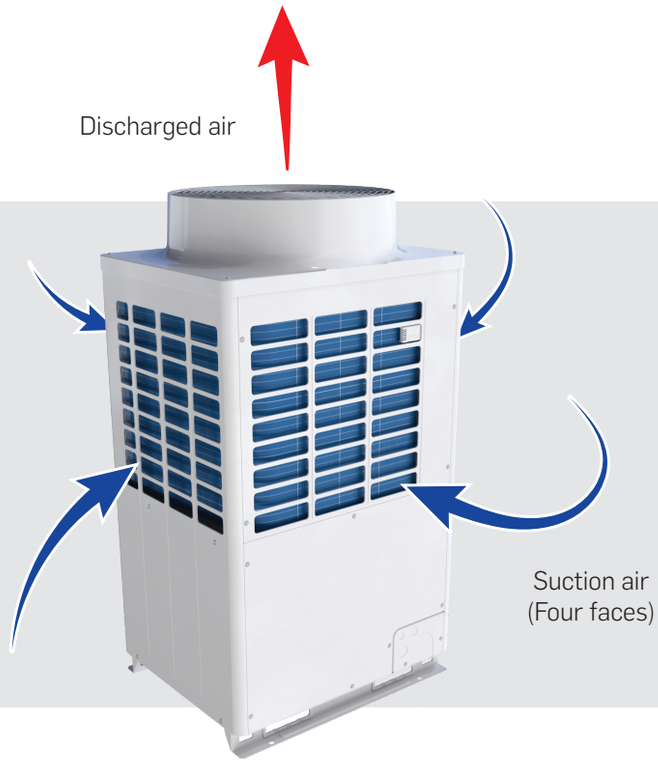

A well-designed system is key to your comfort, delivering reliable & efficient operations and an extended product lifecycle as per design conditions. At Carrier, we are committed to working with our customers to provide innovative solutions for exceptional HVAC design, effective system installation and operations.

102_Carrier- Thailand XCT8 Brochure_25-01-2024.indd 56 25/01/24 9:19 PM

CASE STUDY: DESIGN SUGGESTION FOR LOUVER

Initial Louver Design

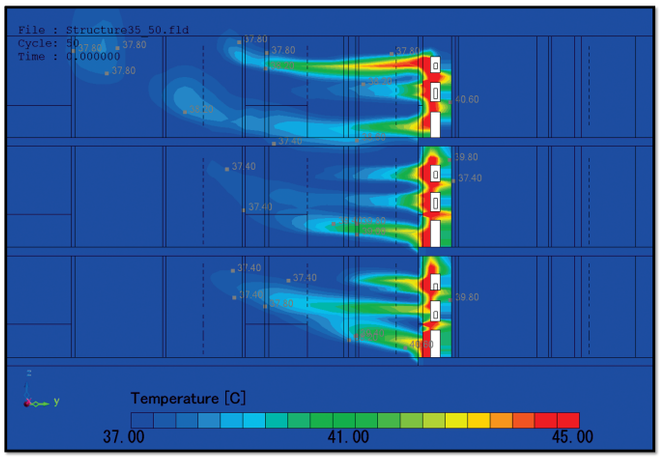

- 3 condensing units (CDUs) stacked in balcony due to space constraints with an aesthetic louver cover
- CFD simulation displays air is not thoroughly discharged due to insufficiently open louver, resulting in a hot air short circuit
- CDU operates at a high temperature of 40°C
- High temperature causes lowered capacity & efficiency, with a shorter product lifespan

Proposed Louver Design

- Maintains configuration of 3 CDUs stacked in balcony with an aesthetic louver cover
- CFD simulation displays sufficiently discharged air with an open louver ratio of 80%
- CDU operates at normal ambient temperature at specified design capacity, with enhanced efficiency & increased product lifespan

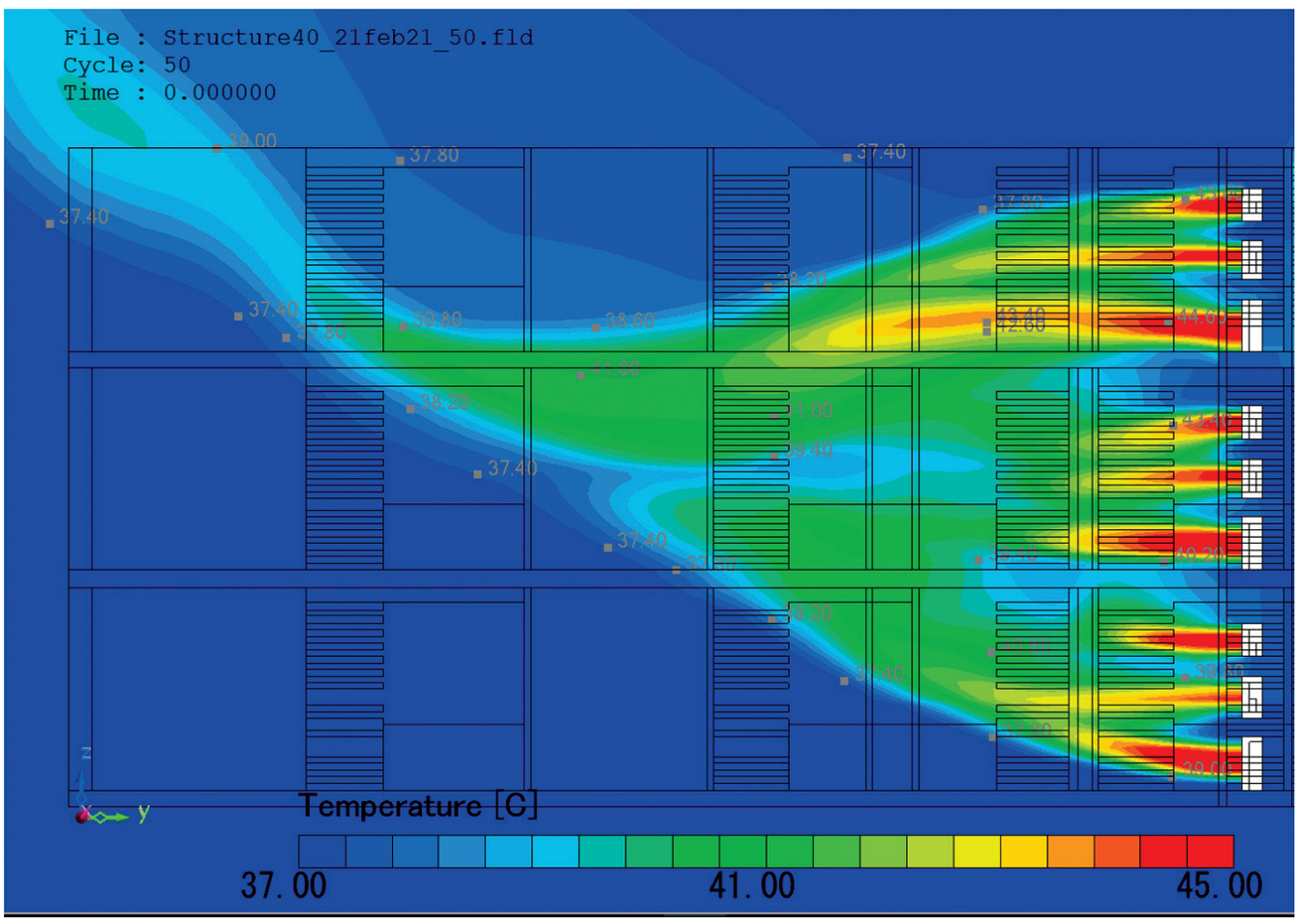

102_Carrier- Thailand XCT8 Brochure_25-01-2024.indd 57 25/01/24 9:19 PM

NOTES

102_Carrier- Thailand XCT8 Brochure_25-01-2024.indd 58 25/01/24 9:19 PM

NOTES

102_Carrier- Thailand XCT8 Brochure_25-01-2024.indd 59 25/01/24 9:19 PM

NOTE:

• Products listed in this catalogue HFC refrigerant R-410A with a GWP of 2,088*.

• Carrier is committed to continuously improving its products to ensure the highest quality & reliability standards, regulations and market requirements.

• All features and specifications are subject to change without prior notice.

*The GWP value is calculated based on information provided in the EU F-Gas Regulation and IPCC Fourth Assessment Report.

CARRIER (THAILAND) CO., LTD.
1858/63-74 Floor 14-15 Debaratana Road, Km. 4.5,
Bangna Tai Subdistrict, Bangna District, Bangkok 10260
Tel. 02-090-9999

Through our commitment to world-class efficiency, versatile scalability and leading quality, Toshiba Air Conditioning advances leading-edge technologies to find the most forward-thinking solutions possible for your world.

HFC R-410A

MASCI
ISO 9001 QMS18026/1686
ISO 14001 EMS18012/471
ISO 45001 OHSMS19061/078

Carrier reserves the right to make changes in specifications without prior notice.

CTH2023--XCT